THIS DRAWING IS UNPUBLISHED. RELEASED FOR PUBLICATION -,- .
© COPYRIGHT - By - ALL RIGHTS RESERVED.

LOC	DIST
AF	50

REVISIONS

P	LTR	DESCRIPTION	DATE	DWN	APVD
	F	REVISED PER ECR-12-013445	09NOV12	KH	PD

1 CONTINUOUS STRIP ON REELS.

2 FEED TO BE .689±.005

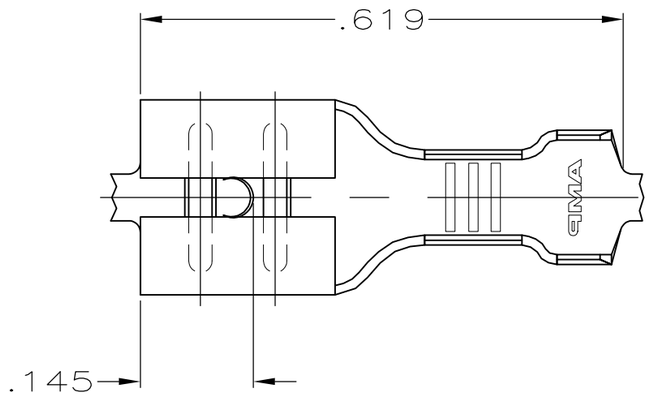

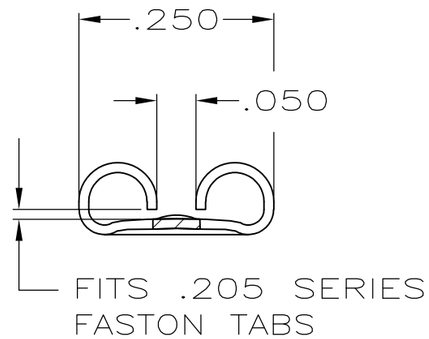

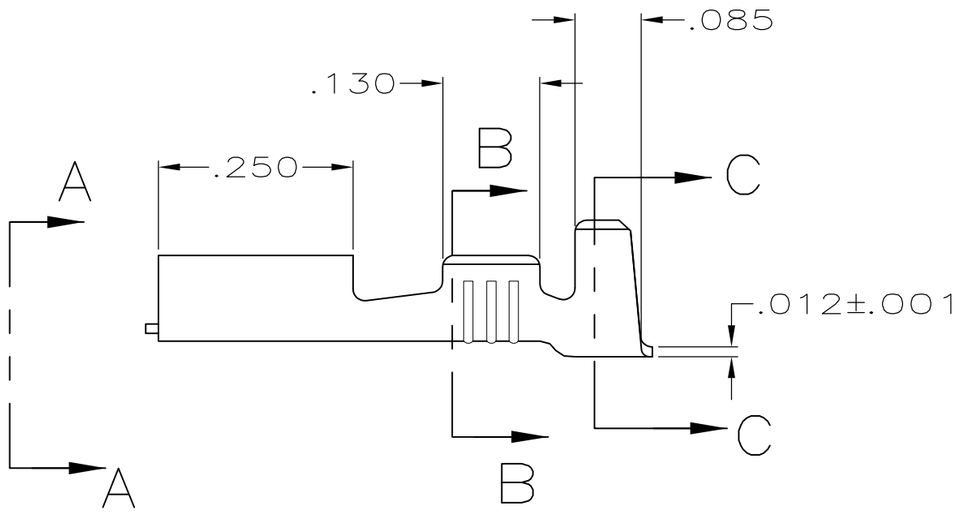

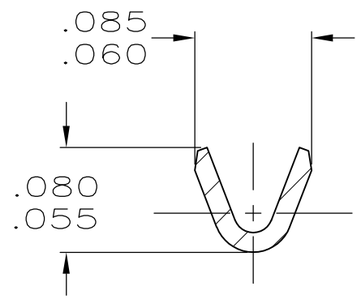

SECTION B-B
SCALE 10:1

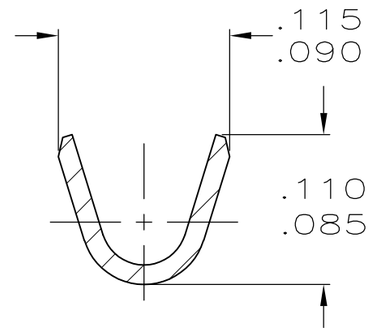

SECTION C-C
SCALE 10:1

OBSOLETE	.050-.070 DIA	26-22 AWG	—	.020	~~60674-2~~
			TIN		60674-1
	INSULATION RANGE	WIRE SIZE	FINISH	MATING TAB THK±.001	PART NUMBER

THIS DRAWING IS A CONTROLLED DOCUMENT.

DIMENSIONS: INCHES

TOLERANCES UNLESS OTHERWISE SPECIFIED:
0 PLC ± –
1 PLC ± –
2 PLC ± .010
3 PLC ± –
4 PLC ± –
ANGLES ± –

MATERIAL: BRASS

FINISH: SEE TABLE

DWN JR RUTH 7/8/91
CHK MS FEHER 7/8/91
APVD — 7/8/91 C MEYERS
PRODUCT SPEC — 7/8/91 D REINER
APPLICATION SPEC —
WEIGHT —

CUSTOMER DRAWING

TE Connectivity

NAME: RECEPTACLE, FASTON, .205 SERIES

SIZE	CAGE CODE	DRAWING NO	RESTRICTED TO
A3	00779	C-60674	—

SCALE	SHEET	REV
5:1	1 OF 1	F