Walther electric

IEC 309-1 AND 309-2 PIN AND SLEEVE DEVICES

CEEtyp™

North American
IEC309-1 & 309-2 Pin & Sleeve

International
IEC309-1 & 309-2 Pin & Sleeve

North American
IEC309 Mechanical Interlocks

International
IEC309 Mechanical Interlocks

Manual Disconnect Switches

Custom-Built
Power Distribution Systems

DIN EN ISO 9001 DQS Certificate Registration No. 4678-01

waltherelectric...A RECOGNIZED WORLD LEADER IN THE DESIGN AND MANUFACTURING OF IEC 309-1 AND 309-2 PIN & SLEEVE DEVICES.

F. Walther Electric Corporation is a U.S. subsidiary of Walther Werke, Ferdinand Walther GmbH, located in Eisenberg, Germany. Walther is an international company committed to serving customers around the world with innovative plug and receptacle systems. With subsidiary offices and distribution centers in the United States, Germany, United Kingdom, France and Austria, cooperatively working with agents located in more than 70 other countries, product accessibility and support are available to equipment manufactures, plants and construction sites worldwide.

One of Walther's many strengths is its uncompromising attention to detail. No short cuts. Just strict standards of consummate quality. Following an aggressive program to certify its manufacturing facilities, Walther has earned ISO 9001 certification.

DIN EN ISO 9001 Certificate Registration No. 4678-01

Since 1897, Walther has been known for its innovative design and manufacturing capabilities for not only meeting, but often exceeding the industry requirements for higher safety demands, better performance and standardized electrical systems.

In the years since Walther introduced the first Pin & Sleeve system built to IEC 309-1 and 309-2 specifications, thousands of new products - that are GUARANTEED to perform - have been added making it the broadest line for power and control applications. This offering makes us one of the largest and best sources for pin & sleeve devices in the world.

TABLE OF CONTENTS

IEC-309-1 and IEC-309-2 Pin and Sleeve Devices

- Introduction 2-5
- Material Specifications 6
- North American Ratings (20 to 100 Amp) 7-16
- Accessories 17-18
- International Ratings (16 to 125 Amp) 19-28
- Useful Tables 29
- Drawings and Dimensions 30-39

IEC-309-1 and IEC-309-2 Mechanical Interlocks

- Introduction 42-43
- North American Ratings (20 to 100 Amp) 44-49
- International Ratings (16 to 125 Amp) 50-54

Manual Disconnect Switches

- Manual Disconnect Switches 55-57

Custom-Built Power Distribution Systems

- Custom-Built Power Distribution Systems 58-65

WORLDWIDE INTERCHANGEABILITY

Walther's pin & sleeve devices are built to IEC 309-1 and 309-2 specifications and are interchangeable with other manufacturers who conform to these IEC standards and color coding system... anywhere in the world. Manufacturers that do not comply with these standards have their own proprietary configurations and are not plug compatible with other pin & sleeve products. Once you have selected a proprietary configuration you are locked in to a single source. Specifying IEC 309-1 & 309-2 devices provides convenience and flexibility that users have come to accept almost without thinking.

SAFETY

IEC 309-2 configurations for plugs (or inlets) and receptacles (or connectors) are single-rated which assures proper mating of devices with the same voltage and amperage. It is virtually impossible to couple a plug and receptacle of different voltage and /or amperage ratings.

The size of the device is determined by the amperage rating. Plugs and receptacles of different amperage ratings are not compatible because of the size variance.

Many proprietary pin & sleeve configurations, that do not conform to the IEC standards, are designed to accommodate multiple voltage systems. A plug wired to a piece of equipment designed to operate at one voltage system could unintentionally be plugged into a receptacle wired with an unlike voltage. Mismatching voltages could cause damage to the equipment or even personal injury and is not considered safe electrical practice.

The voltage, of single rated Pin & Sleeve devices of the IEC 309-2 type, is determined by the location of the oversized female ground contact relative to the key-way located at the bottom of the housing. A clock face is used to represent the location of the ground sleeve for a specific voltage system. For example, a 480 VAC receptacle or connector will have the oversized ground sleeve located in the 7 o'clock position. The corresponding grounding pin location on the plug or inlet is a mirror image of the female device. Devices of mismatched voltage systems simply cannot be mated. Each device is clearly marked with the voltage system for which it is intended to be used. The diagram below shows the keying position and the color coding that is associated with each voltage system.

Walther CEEtyp Clockface Positions in Accordance with IEC 309-2 and UL 1686

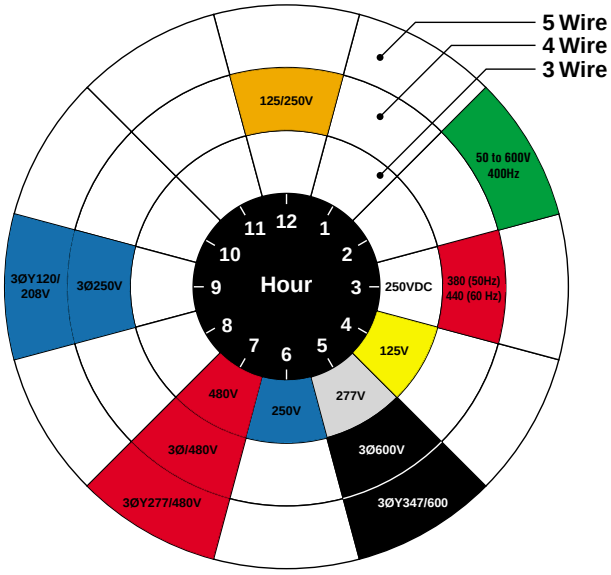

North American Rating
Voltage AC (Except where noted)

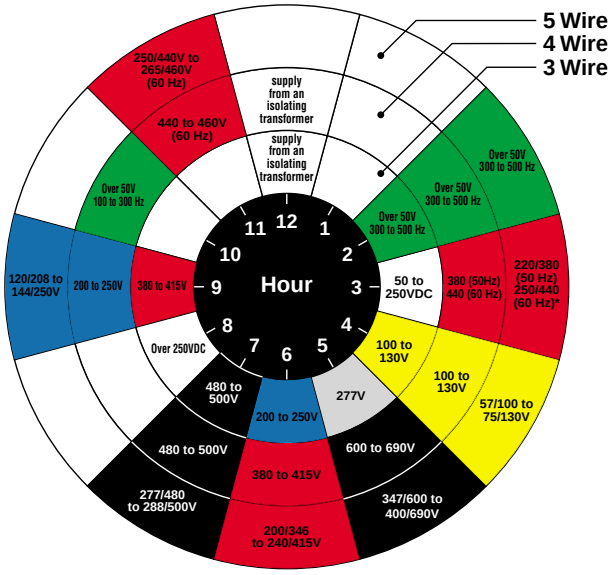

International Rating
Voltage AC (Except where noted)

The insulated housing is made from a high impact, nylon material. The nonmetallic device, while abuse and corrosion resistant, is also nonconductive, which enhances the safety of the product.

ELECTRICAL INTERLOCK

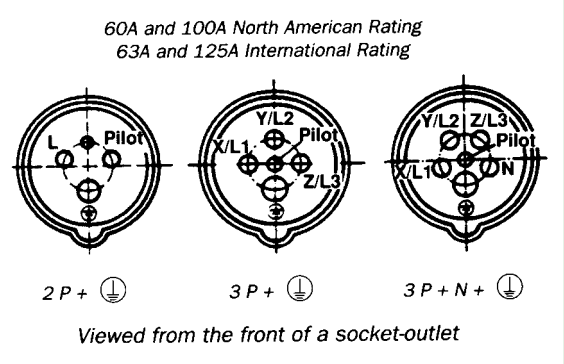

Plugs and receptacles rated 60 amps and above, feature an "electrical interlock" by way of a pilot pin on the plug and female sleeve on the receptacle that is shorter than the main pins. The pilot pin and female sleeve make contact last, and break contact first. This sequence turns the power on when the pilot pin and sleeve mate, and turns the power off before the phase contacts are disengaged. This prevents making or breaking the circuit under load.

RELIABILITY

Walther offers the widest variety of plugs, receptacles, connectors and inlets, made of the highest quality and design integrity in both splashproof and watertight versions.

Watertight (IP67) devices are designed for use in the most demanding environments that require safety, ease of use, reliability and durability. These devices can withstand impact and vibration and provide complete protection against dirt, dust, water jets and even temporary flooding. Watertight devices are available in 20, 30, 60 and 100 amp (North American) ratings and 16, 32, 63 and 125 amp (International) ratings.

Splashproof (IP44) devices are suitable and recommended for use in a variety of light industrial environments and provide complete protection against contact with live parts, damaging deposits of dirt and dust and splashing water. Splashproof devices provide many of the heavy duty construction features found in the watertight products, but at a more economical cost. Splashproof devices are available in 20, 30 and 60 amp (North American) ratings and 16, 32 and 63 amp (International) ratings.

Watertight and splashproof devices provide exceptional UV stability for superior outdoor performance.

All Walther plugs and connectors are supplied with an internal cord clamp designed to firmly grip not only the outer cable jacket but also the internal conductors. The internal cord clamp eliminates strain on the terminals while providing high pull-out values without external protrusions to snag adjacent wiring or the installer.

In addition to the internal cord clamp, Watertight plugs and connectors are also supplied with an external cable gland. This cable gland serves as a secondary method of eliminating strain on the terminals and conductors while assuring watertight performance. Standard splashproof plugs and connectors are also supplied with the same external gland as the watertight devices. However, a cable sleeve, designed to speedup installation, is provided with a lower cost splashproof alternative.

All Walther plugs and connectors, furnished with either a cable gland or cable sleeve, meet the cord and cable secureness requirements defined in UL 1682, Section 33.

TABLE 1 - CHARACTERISTICS DEFINED BY THE CEI 70-1 - IEC 529 - IEC 144 - UTE C 20-010 - DIN 40050 STANDARDS

First Digit - Protection against persons - touching and ingress of solid foreign objects			Second Digit - Protection against the penetration of liquids								
			IP_0	IP_1	IP_2	IP_3	IP_4	IP_5	IP_6	IP_7	IP_8
			Non protected	Protection against vertical falling of water drops	Protection against falling of water drops at an angle up to 15° from the vertical	Protection against spraying water (rain) at an angle up to 60° from the vertical	Protection against splashing water from any direction (360°)	Protection against water jets from any direction (360°)	Protection against heavy seas (waves)	Protection against effects of immersion in water under defined conditions of pressure and time	Protection against continuous submersion in water
								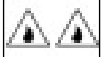			
IP 0_		Without protection	IP 00								
IP 1_		Protection against touching with the hand and solid objects greater than 50mm dia.	IP 10	IP 11	IP 12						
IP 2_	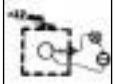	Protection against touching with the finger and solid objects greater than 12mm dia.	IP 20	IP 21	IP 22	IP 23					
IP 3_	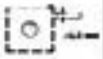	Protection against touching with tools, wires, etc. more than 2.5mm thick and solid objects greater than 2.5mm dia.	IP 30	IP 31	IP 32	IP 33	IP 34				
IP 4_		Protection against touching with tools, wires, etc. more than 1mm thick and solid objects greater than 1mm dia.	IP 40	IP 41	IP 42	IP 43	IP 44				
IP 5_		Unlimited protection against contact with live parts and damaging deposits of dust	IP 50				IP 54	IP 55			
IP 6_		Unlimited protection against contact with live parts and any penetration of dust	IP 60					IP 65	IP 66	IP 67	IP 68

In some countries a third digit (for mechanical security) is added.

TABLE 2

Designation	Intended Use and Description	Construction Requirements
3	Outdoor use primarily to provide a degree of protection against rain, sleet, windblown dust and damage from external ice formation.	Splashproof (IP44)
4	Indoor and outdoor use primarily to provide a degree of protection against windblown dust and rain, splashing water, hose-directed water and damage from external ice formation.	Watertight (IP67)
4X	Indoor and outdoor use primarily to provide a degree of protection against corrosion, windblown dust and rain, splashing water, hose-directed water and damage from external ice formation.	Watertight (IP67)
6	Indoor and outdoor use primarily to provide a degree of protection against hose-directed water, and the entry of water during occasional temporary submersion at a limited depth and damage from external ice formation.	Watertight (IP67)
12, 12K	Indoor use primarily to provide a degree of protection against circulating dust, falling dirt, and dripping non-corrosive liquids.	Splashproof (IP44)

This information is provided only as a general guide. No specific recommendation is intended. As each application may vary, testing should be conducted by the user in the intended environment.

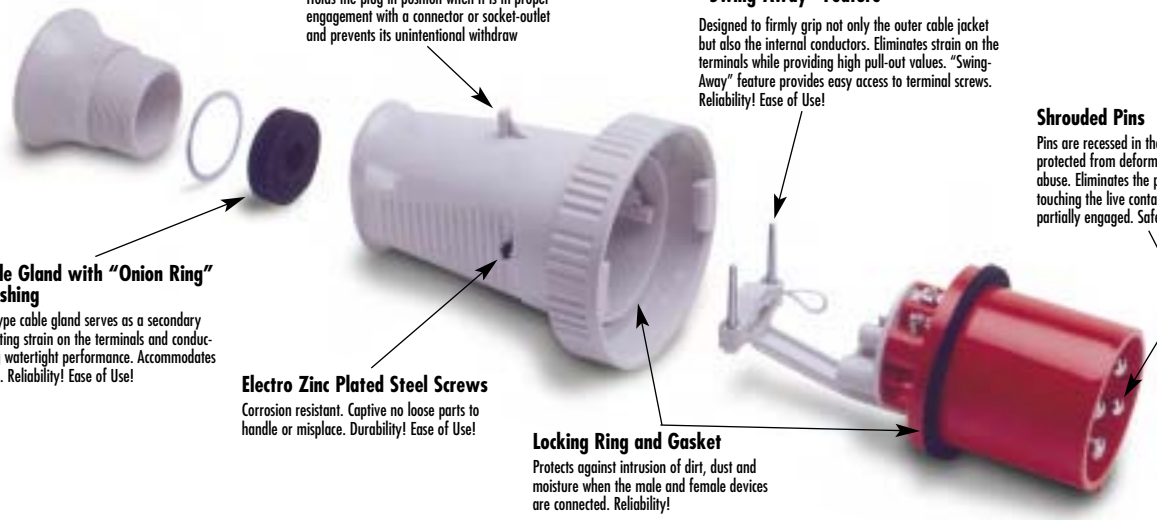

Retaining Device
Holds the plug in position when it is in proper engagement with a connector or socket-outlet and prevents its unintentional withdraw

Internal Strain Relief with "Swing-Away" Feature
Designed to firmly grip not only the outer cable jacket but also the internal conductors. Eliminates strain on the terminals while providing high pull-out values. "Swing-Away" feature provides easy access to terminal screws. Reliability! Ease of Use!

Shrouded Pins
Pins are recessed in the nylon housing and protected from deforming due to physical abuse. Eliminates the potential hazard of touching the live contacts while the plug is partially engaged. Safety! Reliability!

External Cable Gland with "Onion Ring" Neoprene Bushing
The compression type cable gland serves as a secondary method of eliminating strain on the terminals and conductors while assuring watertight performance. Accommodates various cable sizes. Reliability! Ease of Use!

Electro Zinc Plated Steel Screws
Corrosion resistant. Captive no loose parts to handle or misplace. Durability! Ease of Use!

Locking Ring and Gasket
Protects against intrusion of dirt, dust and moisture when the male and female devices are connected. Reliability!

Spring Loaded Gasketed Covers
Protects against accidental encounter with live contacts. Also, protects against intrusion of dirt, dust and moisture. A bayonet coupling device is used to provide optimum stability an simplify installation. Reliability! Safety!

Terminal Identification
Ground, neutral and phase terminals are clearly identified for easy recognition and ease of wiring.

Color Coded
Avoid mismatching. Prevents confusion with regards to voltage ratings. Safety! Ease of Use!

High Impact Thermoplastic Housing
The nonmetalic device, while abuse and corrosion resistant, is also nonconductive, which enhances the safety of the product. The insulated housing is made from a high impact, nylon material and is UV stabilized. Safety! Durability

Staggered Contacts
Oversized ground contact is farthest forward, assuring first make and last break. Neutral is next to prevent the possibility of an "open neutral" condition. Phase contact is farthest making it last to make, first to break. Safety!

Recessed Contacts
Contact sleeves are recessed in the narrow contact tubes thus, providing a "finger proof" device and protecting against any accidental encounter with live contacts. Safety!

Retaining Device
Walther pin & sleeve devices are provided with a mechanical arrangement which holds a plug or connector in position when it is in proper engagement, and prevents its unintentional withdraw.

Double Terminal Screws
Maximum clamping pressure without damaging strands. Double terminal screws create a large area of safe and secure contact between conductor and terminal. Screws are captive, easily accessible and supplied in the open position. Reliability! Safety!

Solid Brass Pins
Low contact resistance and high conductivity. Long lasting, reliable electrical contact. Reliability!

Split Contact Sleeve with Nickel Plated Steel Springs
Provides optimum insertion/withdraw force and constant contact pressure Reliability!

Chamfered Terminals
Funnel Entry. Guides and captures all wire strands. Ease of Use! Reliability!

PLUG

Assembly Screws*	Steel, Electro Zinc Plated
Friction Ring*	Steel, Electro Zinc Plated
Gland Cap	Polycarbonate Blend
Grommet	Solid Neoprene
Housing (Front and Back)	Type 6 Nylon
Internal Cord Clamp	Type 6 Nylon
Locking Ring	Type 6 Nylon
Pins (Watertight)	Brass, Nickel Plated
Pins (Splashproof)	Brass
Sealing Gasket	Neoprene
Terminal Screws	Steel, Nickel Plated

INLET

Housing	Type 6 Nylon
Locking Ring	Type 6 Nylon
Mounting Flange	Type 6 Nylon
Pins (Watertight)	Brass, Nickel Plated
Pins (Splashproof)	Brass
Sealing Gasket	Neoprene
Terminal Screws	Steel, Nickel Plated

* Stainless steel available upon request

CONNECTOR

Assembly Screws*	Steel, Electro Zinc Plated
Cover	Type 6 Nylon
Cover Fastener	Nickel Plated Brass, Brass or Macrolon
Cover Spring	Stainless Steel (A2)
Friction Ring*	Steel, Electro Zinc Plated
Gland Cap	Polycarbonate Blend
Grommet	Solid Neoprene
Housing (Front and Back)	Type 6 Nylon
Internal Cord Clamp	Type 6 Nylon
Sealing Gasket	Neoprene
Sleeve Spring	Steel, Nickel Plated
Sleeves (Watertight)	Brass, Nickel Plated
Sleeves (Splashproof)	Brass
Terminal Screws	Steel, Nickel Plated

RECEPTACLE

Cover	Type 6 Nylon
Cover Fastener	Nickel Plated Brass, Brass or Macrolon
Cover Spring	Stainless Steel (A2)
Housing	Type 6 Nylon
Mounting Flange	Type 6 Nylon
Sealing Gasket	Neoprene
Sleeve Spring	Steel, Nickel Plated
Sleeves (Watertight)	Brass, Nickel Plated
Sleeves (Splashproof)	Brass
Terminal Screws	Steel, Nickel Plated

Manufacturing pin & sleeve devices, of superior quality, can only be accomplished through the use of high grade materials. That is an important part of the Walther Pin & Sleeve system – quality products you can depend on.

Male pins and female sleeves are made of high conductivity brass. Contacts used with watertight devices are nickel plated to prevent corrosion.The insulated housing is made from a high impact, nylon material. The non-metallic device, while resistant to most solvents, chemicals and salt water, is also nonconductive, which enhances the safety of the product.

DIN EN ISO 9001 Certificate Registration No. 4678-01

ELECTRICAL

Insulation Resistance	500V for 1 min. Resistance ≥ 5MΩ
Dielectric Voltage Withstand	3000V for 1 min.
Ground Path Current	See Table 1
Endurance, Connect and Disconnect Cycles	See Table 2
Current Interrupting	Certified for current interrupting at full rated current and voltage.
Overload Test (Power factor 0.75 - 0.80)	Tested for current interrupting at 150% of the rated current and 100% of the rated voltage for 50 cycles.
Temperature Rise	Maximum 30° C rise at full rated current (after overload).
Resistance to Arcing	Continuation of overload test for an additional 200 cycles.

MECHANICAL

Mold Stress Relief	70°C (158°F) for 7 hours.
Humidity	32°C (89.6°F), 93% humidity for 7 days (168 hours).
Cable Secureness	See Table 3
Impact	A device is wired with a 90" (2300mm) length of flexible cord and dropped from 30" (760mm) 8 times. The device is then conditioned for 6 hours at -25°C and immediately subjected to a repeated impact test.
Crushing	250 lbs for 1 minute. The device is then conditioned for 6 hours at -25°C and immediately subjected to a repeated crushing test.
Withdrawal Force	See Table 4
Strength of Insulating Base and Support	110% of specified tightening torque on terminal screws.
Polarization Integrity	Matching devices will not mate so that the ground is energized, even when polarization feature is removed and 40 lb (180 N) insertion force is applied.

ENVIRONMENTAL

Flammability	V-2 or better per UL 94 or CSA 22.2 No. 0.6
Ambient Temperature Range	Minimum: -25°C (-13°F) with impact Maximum: 90°C (194°F)
Resistance to Corrosion	Ferrous parts immersed for 10 min. in a 10% solution of ammonium chloride at a temperature of 20°C.
Moisture Resistance	Watertight (IP67): Device immersed for 24 hours in water at a temp. of 25°C, the highest point of the device being 2" (5cm) below the water level. Splashproof (IP44): Device is sprayed with water for 10 minutes and immediately afterwards subjected to splashing water in all directions (360°).
UV Resistance	Exposed plastic materials are UV stabilized.

TABLE 1

Ground Path Current Test

Device Rating Amperes	Minimum Size Grounding Conductor		Time, Seconds	Test Current, Amperes
	AWG	mm^2		
20	12	3.3	4	470
30	10	5.3	4	750
60	10	5.3	4	750
100	8	8.4	4	1180

A test current that far exceeds the device rating, is passed through the mating devices and grounding wires.

TABLE 2

Endurance Test

Device Rating Amperes	Cycles with Load at Rated Current and Voltage	No-Load Cycles	Sequence
20	5000	0	-
30	1000	1000	Alternating
60	1000	1000	Alternating
100	250	250	Alternating

The test sequence is conducted by using a no-load, followed by a load sequence. The power factor of the load is 0.75 to 0.80.

TABLE 3

Cable Secureness Test

Device Rating Amperes	Force		Torque		Maximum Displacement	
	lb.	N	ft-lb.	N•m	Inches	mm
20	30	133	0.4	0.54	3/32	2.38
30	75	333	0.5	0.68	3/32	2.38
60	150	667	1.0	1.4	3/32	2.38
100	150	667	2.0	2.7	3/32	2.38

The flexible cord or cable is simultaneously twisted and pulled. Values for the applied twisting torque and force of pull are shown in Table 3. In all cases the cord displacement is less than 3/32 inches.

TABLE 4

Withdrawal Forces Test

Device Rating Amperes	Minimum Withdrawal Force		
	lb.	N	Time, Minutes
20	5	22	1
30	6	27	1
60	15	67	1
100	20	89	1

The pressure exerted by mating contacts of a plug and connector must be sufficient to prevent unintentional withdrawal during normal use. During the test, any locking rings or retaining means are not to be engaged.

UL LISTED These products are Listed to applicable UL Standards and requirements by Underwriters Laboratories Inc.
UL 1682 UL 1686

CSA Certified

MALE PLUGS

UL LISTED CSA Certified

Poles and Wires		Voltage AC (Except where noted)	Clock Position of Ground Contact	WATERTIGHT (IP67)	SPLASHPROOF (IP44) Standard Version (with cable gland)	SPLASHPROOF (IP44) Economical Version (with cable sleeve)	SPLASHPROOF (IP44) Low Profile Angled 90°
3	2P + G	250 DC	3	219315	211315	210315	216315
	1P + N + G	125	4	219316	211316	210316	216316
	2P + G	250	6	219306	211306	210306	216306
	1P + N + G	277	5	219317	211317	210317	216317
	2P + G	480	7	219319	211319	210319	216319
4	2P + N + G	125/250	12	218424	212424	210424	216424
	3P + G	3Ø250	9	218409	212409	210409	216409
	3P + G	3Ø480	7	218419	212419	210419	216419
	3P + G	3Ø600	5	218405	212405	210405	216405
5	3P + N + G	Barge Overflow	1	218501BL			
	3P + N + G	3ØY120/208	9	218509	212509	210509	216509
	3P + N + G	3ØY277/480	7	218519	212519	210519	216519
	3P + N + G	3ØY347/600	5	218505	212505	210505	216505
7	6P + G	250	9		212709	210709	
	6P + G	480	7		212719	210719	

FEMALE CONNECTORS

UL LISTED CSA Certified

Poles and Wires		Voltage AC (Except where noted)	Clock Position of Ground Contact	WATERTIGHT (IP67)	SPLASHPROOF (IP44) Standard Version (with cable gland)	SPLASHPROOF (IP44) Economical Version (with cable sleeve)	SPLASHPROOF (IP44) Low Profile Angled 90°
3	2P + G	250 DC	3	319315	311315	310315	316315
	1P + N + G	125	4	319316	311316	310316	316316
	2P + G	250	6	319306	311306	310306	316306
	1P + N + G	277	5	319317	311317	310317	316317
	2P + G	480	7	319319	311319	310319	316319
4	2P + N + G	125/250	12	318424	312424	310424	
	3P + G	3Ø250	9	318409	312409	310409	
	3P + G	3Ø480	7	318419	312419	310419	
	3P + G	3Ø600	5	318405	312405	310405	
5	3P + N + G	Barge Overflow	1	318501BL			
	3P + N + G	3ØY120/208	9	318509	312509	310509	
	3P + N + G	3ØY277/480	7	318519	312519	310519	
	3P + N + G	3ØY347/600	5	318505	312505	310505	
7	6P + G	250	9		312709	310709	
	6P + G	480	7		312719	310719	

FEMALE RECEPTACLES

UL LISTED CSA Certified

	Poles and Wires	Voltage AC (Except where noted)	Clock Position of Ground Contact	WATERTIGHT (IP67) Straight	WATERTIGHT (IP67) Angled 15°	WATERTIGHT (IP67) Angled 80°	SPLASHPROOF (IP44) Straight	SPLASHPROOF (IP44) Angled 15°	SPLASHPROOF (IP44) Angled 80°
3	2P + G	250 DC	3	419315	519315	518315	410315	510315	514315
	1P + N + G	125	4	419316	519316	518316	410316	510316	514316
	2P + G	250	6	419306	519306	518306	410306	510306	514306
	1P + N + G	277	5	419317	519317	518317	410317	510317	514317
	2P + G	480	7	419319	519319	518319	410319	510319	514319
4	2P + N + G	125/250	12	419424	519424	518424	410424	510424	514424
	3P + G	3Ø250	9	419409	519409	518409	410409	510409	514409
	3P + G	3Ø480	7	419419	519419	518419	410419	510419	514419
	3P + G	3Ø600	5	419405	519405	518405	410405	510405	514405
5	3P + N + G	Barge Overflow	1	419501BL	519501BL	518501BL			
	3P + N + G	3ØY120/208	9	419509	519509	518509	410509	510509	514509
	3P + N + G	3ØY277/480	7	419519	519519	518519	410519	510519	514519
	3P + N + G	3ØY347/600	5	419505	519505	518505	410505	510505	514505
7	6P + G	250	9				411709		514709
	6P + G	480	7				411719		514719

Note: See pages 16 and 17 for surface mount receptacles and back boxes.

MALE INLETS

UL LISTED CSA Certified

	Poles and Wires	Voltage AC (Except where noted)	Clock Position of Ground Contact	WATERTIGHT (IP67) Angled 80°	WATERTIGHT (IP67) Surface Mount*	SPLASHPROOF (IP44) Straight	SPLASHPROOF (IP44) Angled 80°	SPLASHPROOF (IP44) Surface Mount*
3	2P + G	250 DC	3	619315	618315	615315	611315	
	1P + N + G	125	4	619316	618316	615316	611316	
	2P + G	250	6	619306	618306	615306	611306	
	1P + N + G	277	5	619317	618317	615317	611317	
	2P + G	480	7	619319	618319	615319	611319	
4	2P + N + G	125/250	12	619424	618424	615424	611424	616424
	3P + G	3Ø250	9	619409	618409	615409	611409	616409
	3P + G	3Ø480	7	619419	618419	615419	611419	616419
	3P + G	3Ø600	5	619405	618405	615405	611405	616405
5	3P + N + G	Barge Overflow	1	619501BL	618501BL			
	3P + N + G	3ØY120/208	9	619509	618509	615509	611509	616509
	3P + N + G	3ØY277/480	7	619519	618519	615519	611519	616519
	3P + N + G	3ØY347/600	5	619505	618505	615505	611505	616505
7	6P + G	250	9			615709	611709	616709
	6P + G	480	7			615719	611719	616719

* Classified by Underwriters Laboratories Inc. to IEC Standards 309-1 and 309-2.

MALE PLUGS

UL LISTED CSA Certified

	Poles and Wires	Voltage AC (Except where noted)	Clock Position of Ground Contact	WATERTIGHT (IP67)	SPLASHPROOF (IP44) Standard Version (with cable gland)	SPLASHPROOF (IP44) Economical Version (with cable sleeve)	SPLASHPROOF (IP44) Low Profile Angled 90°
3	2P + G	250 DC	3	239315	231315	230315	236315
	1P + N + G	125	4	239316	231316	230316	236316
	2P + G	250	6	239306	231306	230306	236306
	1P + N + G	277	5	239317	231317	230317	236317
	2P + G	480	7	239319	231319	230319	236319
4	2P + N + G	125/250	12	238424	232424	230424	236424
	3P + G	3Ø250	9	238409	232409	230409	236409
	3P + G	380/440*	3	238403*			
	3P + G	3Ø480	7	238419	232419	230419	236419
	3P + G	3Ø600	5	238405	232405	230405	236405
5	3P + N + G	50-600 400Hz	2	238502	232502	230502	236502
	3P + N + G	3ØY120/208	9	238509	232509	230509	236509
	3P + N + G	3ØY277/480	7	238519	232519	230519	236519
	3P + N + G	3ØY347/600	5	238505	232505	230505	236505
7	6P + G	250	9		232709	230709	
	6P + G	480	7		232719	230719	

FEMALE CONNECTORS

UL LISTED CSA Certified

	Poles and Wires	Voltage AC (Except where noted)	Clock Position of Ground Contact	WATERTIGHT (IP67)	SPLASHPROOF (IP44) Standard Version (with cable gland)	SPLASHPROOF (IP44) Economical Version (with cable sleeve)
3	2P + G	250 DC	3	339315	331315	330315
	1P + N + G	125	4	339316	331316	330316
	2P + G	250	6	339306	331306	330306
	1P + N + G	277	5	339317	331317	330317
	2P + G	480	7	339319	331319	330319
4	2P + N + G	125/250	12	338424	332424	330424
	3P + G	3Ø250	9	338409	332409	330409
	3P + G	380/440*	3	338403*		
	3P + G	3Ø480	7	338419	332419	330419
	3P + G	3Ø600	5	338405	332405	330405
5	3P + N + G	50-600 400Hz	2	338502	332502	330502
	3P + N + G	3ØY120/208	9	338509	332509	330509
	3P + N + G	3ØY277/480	7	338519	332519	330519
	3P + N + G	3ØY347/600	5	338505	332505	330505
7	6P + G	250	9		332709	330709
	6P + G	480	7		332719	330719

* Only for refrigerated containers. Supplied with stainless steel assembly screws and friction ring.

FEMALE RECEPTACLES

UL LISTED CSA Certified

	Poles and Wires	Voltage AC (Except where noted)	Clock Position of Ground Contact	WATERTIGHT (IP67) Straight	WATERTIGHT (IP67) Angled 15°	WATERTIGHT (IP67) Angled 80°	SPLASHPROOF (IP44) Straight	SPLASHPROOF (IP44) Angled 15°	SPLASHPROOF (IP44) Angled 80°
3	2P + G	250 DC	3	439315	539315	538315	430315	530315	534315
	1P + N + G	125	4	439316	539316	538316	430316	530316	534316
	2P + G	250	6	439306	539306	538306	430306	530306	534306
	1P + N + G	277	5	439317	539317	538317	430317	530317	534317
	2P + G	480	7	439319	539319	538319	430319	530319	534319
4	2P + N + G	125/250	12	439424	539424	538424	430424	530424	534424
	3P + G	3Ø250	9	439409	539409	538409	430409	530409	534409
	3P + G	380/440*	3	439403*					
	3P + G	3Ø480	7	439419	539419	538419	430419	530419	534419
	3P + G	3Ø600	5	439405	539405	538405	430405	530405	534405
5	3P + N + G	50-600 400Hz	2	439502	539502	538502	430502	530502	534502
	3P + N + G	3ØY120/208	9	439509	539509	538509	430509	530509	534509
	3P + N + G	3ØY277/480	7	439519	539519	538519	430519	530519	534519
	3P + N + G	3ØY347/600	5	439505	539505	538505	430505	530505	534505
7	6P + G	250	9				431709		534709
	6P + G	480	7				431719		534719

Note: See pages 16 and 17 for surface mount receptacles and back boxes.

MALE INLETS

UL LISTED CSA Certified

	Poles and Wires	Voltage AC (Except where noted)	Clock Position of Ground Contact	WATERTIGHT (IP67) Angled 80°	WATERTIGHT (IP67) Surface Mount**	SPLASHPROOF (IP44) Straight	SPLASHPROOF (IP44) Angled 80°	SPLASHPROOF (IP44) Surface Mount**
3	2P + G	250 DC	3	639315	638315	635315	631315	636315
	1P + N + G	125	4	639316	638316	635316	631316	636316
	2P + G	250	6	639306	638306	635306	631306	636306
	1P + N + G	277	5	639317	638317	635317	631317	636317
	2P + G	480	7	639319	638319	635319	631319	636319
4	2P + N + G	125/250	12	639424	638424	635424	631424	636424
	3P + G	3Ø250	9	639409	638409	635409	631409	636409
	3P + G	380/440*	3	639403*	638403*			
	3P + G	3Ø480	7	639419	638419	635419	631419	636419
	3P + G	3Ø600	5	639405	638405	635405	631405	636405
5	3P + N + G	50-600 400Hz	2	639502	638502	635502	631502	636502
	3P + N + G	3ØY120/208	9	639509	638509	635509	631509	636509
	3P + N + G	3ØY277/480	7	639519	638519	635519	631519	636519
	3P + N + G	3ØY347/600	5	639505	638505	635505	631505	636505
7	6P + G	250	9			635709	631709	636709
	6P + G	480	7			635719	631719	636719

* Only for refrigerated containers. ** Classified by Underwriters Laboratories Inc. to IEC Standards 309-1 and 309-2.

MALE PLUGS

UL LISTED CSA Certified

Poles and Wires (With pilot)		Voltage AC (Except where noted)	Clock Position of Ground Contact	WATERTIGHT (IP67)	SPLASHPROOF (IP44) Standard Version (with cable gland)	SPLASHPROOF (IP44) Economical Version (with cable sleeve)
3	2P + G	250 DC	3	269315	261315	260315
	1P + N + G	125	4	269316	261316	260316
	2P + G	250	6	269306	261306	260306
	1P + N + G	277	5	269317	261317	260317
	2P + G	480	7	269319	261319	260319
4	2P + N + G	125/250	12	269424	261424	260424
	3P + G	3Ø250	9	269409	261409	260409
	3P + G	3Ø480	7	269419	261419	260419
	3P + G	3Ø600	5	269405	261405	260405
5	3P + N + G	50-600 400Hz	2	269502	261502	260502
	3P + N + G	3ØY120/208	9	269509	261509	260509
	3P + N + G	3ØY277/480	7	269519	261519	260519
	3P + N + G	3ØY347/600	5	269505	261505	260505

FEMALE CONNECTORS

UL LISTED CSA Certified

Poles and Wires (With pilot)		Voltage AC (Except where noted)	Clock Position of Ground Contact	WATERTIGHT (IP67)	SPLASHPROOF (IP44) Standard Version (with cable gland)	SPLASHPROOF (IP44) Economical Version (with cable sleeve)
3	2P + G	250 DC	3	369315	361315	360315
	1P + N + G	125	4	369316	361316	360316
	2P + G	250	6	369306	361306	360306
	1P + N + G	277	5	369317	361317	360317
	2P + G	480	7	369319	361319	360319
4	2P + N + G	125/250	12	369424	361424	360424
	3P + G	3Ø250	9	369409	361409	360409
	3P + G	3Ø480	7	369419	361419	360419
	3P + G	3Ø600	5	369405	361405	360405
5	3P + N + G	50-600 400Hz	2	369502	361502	360502
	3P + N + G	3ØY120/208	9	369509	361509	360509
	3P + N + G	3ØY277/480	7	369519	361519	360519
	3P + N + G	3ØY347/600	5	369505	361505	360505

FEMALE RECEPTACLES

UL LISTED CSA Certified

	Poles and Wires (With pilot)	Voltage AC (Except where noted)	Clock Position of Ground Contact	WATERTIGHT (IP67) Straight	WATERTIGHT (IP67) Angled 15°	WATERTIGHT (IP67) Angled 80°	SPLASHPROOF (IP44) Straight	SPLASHPROOF (IP44) Angled 15°	SPLASHPROOF (IP44) Angled 80°
3	2P + G	250 DC	3	469315	569315	568315	460315	560315	564315
	1P + N + G	125	4	469316	569316	568316	460316	560316	564316
	2P + G	250	6	469306	569306	568306	460306	560306	564306
	1P + N + G	277	5	469317	569317	568317	460317	560317	564317
	2P + G	480	7	469319	569319	568319	460319	560319	564319
4	2P + N + G	125/250	12	469424	569424	568424	460424	560424	564424
	3P + G	3Ø250	9	469409	569409	568409	460409	560409	564409
	3P + G	3Ø480	7	469419	569419	568419	460419	560419	564419
	3P + G	3Ø600	5	469405	569405	568405	460405	560405	564405
5	3P + N + G	50-600 400Hz	2	469502	569502	568502	460502	560502	564502
	3P + N + G	3ØY120/208	9	469509	569509	568509	460509	560509	564509
	3P + N + G	3ØY277/480	7	469519	569519	568519	460519	560519	564519
	3P + N + G	3ØY347/600	5	469505	569505	568505	460505	560505	564505

Note: See pages 16 and 17 for surface mount receptacles and back boxes.

MALE INLETS

UL LISTED CSA Certified

	Poles and Wires (With pilot)	Voltage AC (Except where noted)	Clock Position of Ground Contact	WATERTIGHT (IP67) Angled 80°	WATERTIGHT (IP67) Surface Mount*	SPLASHPROOF (IP44) Straight	SPLASHPROOF (IP44) Angled 80°
3	2P + G	250 DC	3	669315	668315		661315
	1P + N + G	125	4	669316	668316		661316
	2P + G	250	6	669306	668306		661306
	1P + N + G	277	5	669317	668317		661317
	2P + G	480	7	669319	668319		661319
4	2P + N + G	125/250	12	669424	668424		661424
	3P + G	3Ø250	9	669409	668409		661409
	3P + G	3Ø480	7	669419	668419		661419
	3P + G	3Ø600	5	669405	668405		661405
5	3P + N + G	50-600 400Hz	2	669502	668502	665502	661502
	3P + N + G	3ØY120/208	9	669509	668509	665509	661509
	3P + N + G	3ØY277/480	7	669519	668519	665519	661519
	3P + N + G	3ØY347/600	5	669505	668505	665505	661505

* Classified by Underwriters Laboratories Inc. to IEC Standards 309-1 and 309-2.

MALE PLUGS

UL LISTED CSA Certified

	Poles and Wires (With pilot)	Voltage AC (Except where noted)	Clock Position of Ground Contact	WATERTIGHT (IP67)
3	2P + G	250 DC	3	279315
	1P + N + G	125	4	279316
	2P + G	250	6	279318
	1P + N + G	277	5	279317
	2P + G	480	7	279319
4	2P + N + G	125/250	12	279424
	3P + G	3Ø250	9	279421
	3P + G	3Ø480	7	279419
	3P + G	3Ø600	5	279417
5	3P + N + G	3ØY120/208	9	279521
	3P + N + G	3ØY277/480	7	279519
	3P + N + G	3ØY347/600	5	279517

FEMALE CONNECTORS

UL LISTED CSA Certified

	Poles and Wires (With pilot)	Voltage AC (Except where noted)	Clock Position of Ground Contact	WATERTIGHT (IP67)
3	2P + G	250 DC	3	379315
	1P + N + G	125	4	379316
	2P + G	250	6	379318
	1P + N + G	277	5	379317
	2P + G	480	7	379319
4	2P + N + G	125/250	12	379424
	3P + G	3Ø250	9	379421
	3P + G	3Ø480	7	379419
	3P + G	3Ø600	5	379417
5	3P + N + G	3ØY120/208	9	379521
	3P + N + G	3ØY277/480	7	379519
	3P + N + G	3ØY347/600	5	379517

FEMALE RECEPTACLES

UL LISTED CSA Certified

Poles and Wires (With pilot)		Voltage AC (Except where noted)	Clock Position of Ground Contact	WATERTIGHT (IP67) Straight	WATERTIGHT (IP67) Angled 15°
3	2P + G	250 DC	3	479315	579315
	1P + N + G	125	4	479316	579316
	2P + G	250	6	479318	579318
	1P + N + G	277	5	479317	579317
	2P + G	480	7	479319	579319
4	2P + N + G	125/250	12	479424	579424
	3P + G	3Ø250	9	479421	579421
	3P + G	3Ø480	7	479419	579419
	3P + G	3Ø600	5	479417	579417
5	3P + N + G	3ØY120/208	9	479521	579521
	3P + N + G	3ØY277/480	7	479519	579519
	3P + N + G	3ØY347/600	5	479517	579517

Note: See pages 16 and 17 for surface mount receptacles and back boxes.

MALE INLETS

UL LISTED CSA Certified

Poles and Wires (With pilot)		Voltage AC (Except where noted)	Clock Position of Ground Contact	WATERTIGHT (IP67) Straight	WATERTIGHT (IP67) Surface Mount*
3	2P + G	250 DC	3	679315	678315
	1P + N + G	125	4	679316	678316
	2P + G	250	6	679318	678318
	1P + N + G	277	5	679317	678317
	2P + G	480	7	679319	678319
4	2P + N + G	125/250	12	679424	678424
	3P + G	3Ø250	9	679421	678421
	3P + G	3Ø480	7	679419	678419
	3P + G	3Ø600	5	679417	678417
5	3P + N + G	3ØY120/208	9	679521	678521
	3P + N + G	3ØY277/480	7	679519	678519
	3P + N + G	3ØY347/600	5	679517	678517

* Classified by Underwriters Laboratories Inc. to IEC Standards 309-1 and 309-2.

SURFACE MOUNT RECEPTACLES

Certified

				WATERTIGHT (IP67)				SPLASHPROOF (IP44)		
				20 Amps	30 Amps	60 Amps	100 Amps	20 Amps	30 Amps	60 Amps
	No. of Wires	Voltage AC	Clock Position of Ground Contact							
3	2P + G	250 DC	3	119315	139315		179315	111315	131315	
	1P + N + G	125	4	119316	139316		179316	111316	131316	
	2P + G	250	6	119306	139306		179318	111306	131306	
	1P + N + G	277	5	119317	139317		179317	111317	131317	
	2P + G	480	7	119319	139319		179319	111319	131319	
4	2P + N + G	125/250	12	119424	139424	169424	179424	111424	131424	161424
	3P + G	3Ø250	9	119409	139409	169409	179421	111409	131409	161409
	3P + G	380/440**	3		139403*					
	3P + G	3Ø480	7	119419	139419	169419	179419	111419	131419	161419
	3P + G	3Ø600	5	119405	139405	169405	179417	111405	131405	161405
5	3P + N + G	Barge Overflow	1	119501BL						
	3P + N + G	3ØY120/208	9	119509	139509	169509	179521	111509	131509	161509
	3P + N + G	3ØY277/480	7	119519	139519	169519	179519	111519	131519	161519
	3P + N + G	3ØY347/600	5	119505	139505	169505	179517	111505	131505	161505
7	6P + G	250	9					111709	131709	
	6P + G	480	7					111719	131719	

* Only for refrigerated containers. **Surface mount receptacles combine a back box and receptacle into one compact device.

BACK BOXES for use with Walther watertight and splashproof receptacles.

Cat. No.	Description	Hub Size	Dimensions (inches) A	B	C	D	E	F	G	Cubic Inch Capacity
BE3-B75	20° angle for 20A, 4 and 5 wire receps. and all 30A receps.	¾″	3.34	0.97	1.12	4.12	4.00	0.25		20.4
BE3-B100		1″								
BE6-B125	20° angle for all 60A receptacles	1 ¼″	4.41	1.41	2.09	5.63	5.00	0.28	3.00	59.7
BE6-B150		1 ½″								
BE10-B150	20° angle for all 100A receptacles	1 ½″								
BE10-B200		2″	5.18	1.78	2.50	7.71	5.50	.34	4.00	96.6

NOTE: For availability of straight back boxes, please contact technical service

Cast Aluminum Junction Boxes for Watertight and Splashproof Receptacles

Epoxy-coated junction boxes are corrosion resistant and designed to pass the 500-hour salt spray test and the UL hosedown and external icing test.

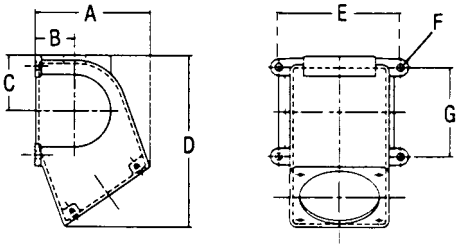

BACK BOX ADAPTER PLATES for use with Hubbell back boxes.

Cat. No.	Walther Receptacle	For use with Hubbell Back Box
BB20-3W	20A, 3 Wire	BB201W, BB301W, FT202W or FT302W
BB20-345W	20A, 4 & 5 Wire 30A, 3, 4 & 5 Wire	BB201W, BB301W, FT202W or FT302W
BB60-345W	60A, 3, 4 &5 Wire	BB601W, BB602W or FW60/100
BB100-345W	100A, 3, 4 & 5 Wire	BB1001W, BB1002W or FW60/100

METRIC PG THREAD TO NPT THREAD ADAPTERS

Cat. No.	Description	Std. Pkg.
PG11-38	PG11 to ⅜″ NPT Adapter	25
PG11-50	PG11 to ½″ NPT Adapter	25
PG135-50	PG13,5 to ½″ NPT Adapter	25
PG16-50	PG16 to ½″ NPT Adapter	25
PG21-75	PG21 to ¾″ NPT Adapter	25
PG29-100	PG29 to 1″ NPT Adapter	10
PG29-125	PG29 to 1 ¼″ NPT Adapter	5
PG36-125	PG36 to 1 ¼″ NPT Adapter	5

For PG thread sizes to NPT thread sizes not shown, consult technical service for price, delivery and minimum order quantities.

WATERTIGHT CLOSURE CAPS for use with watertight male plugs and inlets

Cat. No.	Poles and Wires	Amperage Rating	Std. Pkg Quantity
613300	3 Wire	20	5
633400		30	5
663500		60	2
673500		100	2
613400	4 Wire	20	5
633400		30	5
663500		60	2
673500		100	2
613500	5 Wire	20	5
633500		30	5
663500		60	2
673500		100	2

SPLASHPROOF CLOSURE CAPS for use with splashproof male plugs and inlets

Cat. No.	Poles and Wires	Amperage Rating	Std. Pkg Quantity
614300	3 Wire	20	5
634400		30	5
664500		60	2
614400	4 Wire	20	5
634400		30	5
664500		60	2
614500	5 Wire	20	5
634500		30	5
664500		60	2

PRE-INSTALLED CLOSURE CAPS

Closure caps provide watertight or splashproof protection to disconnected plugs and inlets. The possibility of removing or misplacing the cap can be eliminated by securing the chain or nylon strap to the inlet flange. If the closure cap will be fastened to a plug, Walther can pre-install the cap on the device. This factory installation assures safe and reliable utilization of the two components. Contact customer service for ordering information.

ELECTRICAL

Insulation Resistance Per IEC 309-1, Clause 19	500V for 1 min. Resistance ≥ 5MΩ
Dielectric Strength Per IEC 309-1, Clause 19	3000V for 1 min.
Norm. Operation, Connect & Disconnect Cycles Per IEC 309-1, Clause 21	See Table 1
Breaking Capacity Per IEC 309-1, Clause 20	Tested at 110 % of the rated operating voltage and 125% of the rated current.
Temperature Rise Per IEC 309-1, Clause 22	Maximum 50 K rise at full rated current.

MECHANICAL

Cable Secureness Per IEC 309, Clause 23	See Table 2
Impact Per IEC 309, Clause 24	A device is wired with a 2.25m length of flexible cord and dropped from a height of 75 cm, 8 times. The device is then tested for applicable degrees of protection against moisture.

ENVIRONMENTAL

Flammability	Self-extinguishing Per IEC 309-1, Clause 27
Ambient Temperature Range	Minimum: -25°C with impact Maximum: 90°C
Moisture Resistance	Watertight (IP67): Device immersed for 24 hours in water at a temp. of 25°C, the highest point of the device being 5cm (2") below the water level. Splashproof (IP44): Device is sprayed with water for 10 minutes and immediately afterwards subjected to splashing water in all directions (360°).
UV Resistance	Exposed plastic materials are UV stabilized.

DECLARATION OF CONFORMITY

WALTHER WERKE, Ferdinand Walther GmbH
Ramsener Strasse 6
67304 Eisenberg

We declare, under our sole responsibility, the conformity of the following products and standards:

Plugs and Sockets (Pin and Sleeve devices)
DIN EN 60 309, T. 1/BS 4343
DIN EN 60 309, T. 2

This declaration of conformity is according to the EC regulations 73/23, 91/368 and 89/336 (Low Voltage Directive), module A, in consideration of DIN EN 45 014.

TABLE 1

Connect and Disconnect Cycles

Device Rating Amperes	Cycles with Load at Rated Current and Voltage	No-Load Cycles	Sequence
16	5000 p.f of 0.6	0	-
32	1000 p.f of 0.6	1000	Alternating
63	1000 p.f of 0.6	1000	Alternating
125	250 p.f of 0.7	250	Alternating

The test sequence is conducted by using a no-load, followed by a load sequence.

TABLE 2

Cable Secureness Test

Device Rating Amperes	Force	Torque	Maximum Displacement
	N	N•m	mm
16	80	0.350	2
32	100	0.425	2
63	120	0.8	2
125	200	1.5	2

The flexible cord or cable is twisted and pulled. Values for the applied twisting torque and force of pull are shown in Table 2. In all cases the cord displacement is less than 2mm.

Norway Germany Finland Switzerland

Austria Sweden Belgium Denmark Italy

Netherlands Czechoslovakia Hungary Russia

United States Canada

DIN EN ISO 9001 Certificate Registration No. 4678-01

MALE PLUGS

	No. of Wires	Voltage AC	Clock Position of Ground Contact	WATERTIGHT (IP67)	SPLASHPROOF (IP44) with cable gland	SPLASHPROOF (IP44) with cable sleeve	SPLASHPROOF (IP44) Angled 90°
3	2P + G	110	4	219304	211304	210304	216304
		230	6	219306	211306	210306	216306
		400	9	219309	211309	210309	216309
4	3P + G	110	4	219404	211404	210404	216404
		230	9	219409	211409	210409	216409
		400	6	219406	211406	210406	216406
		440	11	219411	211411	210411	216411
		500	7	219407	211407	210407	216407
		>50 (100-300Hz)	10	219410	211410	210410	216410
		>50 (300-500Hz)	2	219402	211402	210402	216402
5	3P + N + G	110	4	219504	211504	210504	216504
		230	9	219509	211509	210509	216509
		400	6	219	211	210	216
		440	11	219511	211511	210511	216511
7	6P + G	400	6		211706	210706	

FEMALE CONNECTORS (Couplers)

	No. of Wires	Voltage AC	Clock Position of Ground Contact	WATERTIGHT (IP67)	SPLASHPROOF (IP44) with cable gland	SPLASHPROOF (IP44) with cable sleeve	SPLASHPROOF (IP44) Angled 90°
3	2P + G	110	4	319304	311304	310304	316304
		230	6	319306	311306	310306	316306
		400	9	319309	311309	310309	316309
4	3P + G	110	4	319404	311404	310404	
		230	9	319409	311409	310409	
		400	6	319406	311406	310406	
		440	11	319411	311411	310411	
		500	7	319407	311407	310407	
		>50 (100-300Hz)	10	319410	311410	310410	
		>50 (300-500Hz)	2	319402	311402	310402	
5	3P + N + G	110	4	319504	311504	310504	
		230	9	319509	311509	310509	
		400	6	319	311	310	
		440	11	319511	311511	310511	
7	6P + G	400	6		311706	310706	

FEMALE PANEL MOUNTED SOCKET-OUTLET

				WATERTIGHT (IP67)			SPLASHPROOF (IP44)		
				Straight	Angled 15°	Angled 80°	Straight	Angled 15°	Angled 80°
	No. of Wires	Voltage AC	Clock Position of Ground Contact						
3	2P + G	110	4	419304	519304	518304	410304	510304	514304
		230	6	419306	519306	518306	410306	510306	514306
		400	9	419309	519309	518309	410309	510309	514309
4	3P + G	110	4	419404	519404	518404	410404	510404	514404
		230	9	419409	519409	518409	410409	510409	514409
		400	6	419406	519406	518406	410406	510406	514406
		440	11	419411	519411	518411	410411	510411	514411
		500	7	419407	519407	518407	410407	510407	514407
		>50 (100-300Hz)	10	419410	519410	518410	410410	510410	514410
		>50 (300-500Hz)	2	419402	519402	518402	410402	510402	514402
5	3P + N + G	110	4	419504	519504	518504	410504	510504	514504
		230	9	419509	519509	518509	410509	510509	514509
		400	6	419	519	518	410	510	514
		440	11	419511	519511	518511	410511	510511	514511
7	6P + G	400	6				411706		514706

Note: See page 28 for surface mount socket-outlets.

MALE APPLIANCE PLUG (Inlet)

				WATERTIGHT (IP67)		SPLASHPROOF (IP44)			
				Angled 80°	Surface Mount	Straight	Angled 80°	Surface Mount External Mounting	Surface Mount Internal Mounting
	No. of Wires	Voltage AC	Clock Position of Ground Contact						
3	2P + G	110	4	619304	618304	615304	611304	610304	
		230	6	619306	618306	615306	611306	610306	
		400	9	619309	618309	615309	611309	610309	
4	3P + G	110	4	619404	618404	615404	611404	610404	616404
		230	9	619409	618409	615409	611409	610409	616409
		400	6	619406	618406	615406	611406	610406	616406
		440	11	619411	618411	615411	611411	610411	616411
		500	7	619407	618407	615407	611407	610407	616407
		>50 (100-300Hz)	10	619410	618410	615410	611410	610410	616410
		>50 (300-500Hz)	2	619402	618402	615402	611402	610402	616402
5	3P + N + G	110	4	619504	618504	615504	611504	610504	616504
		230	9	619509	618509	615509	611509	610509	616509
		400	6	619	618	615	611	610	616
		440	11	619511	618511	615511	611511	610511	616511
7	6P + G	400	6			615706	611706	610706	616706

MALE PLUGS

	No. of Wires	Voltage AC	Clock Position of Ground Contact	WATERTIGHT (IP67)	SPLASHPROOF (IP44) with cable gland	SPLASHPROOF (IP44) with cable sleeve	SPLASHPROOF (IP44) Angled 90°
3	2P + G	110	4	239304	231304	230304	236304
		230	6	239306	231306	230306	236306
		400	9	239309	231309	230309	236309
4	3P + G	110	4	239404	231404	230404	236404
		230	9	239409	231409	230409	236409
		400	6	239406	231406	230406	236406
		380/440*	3	239403*			
		440	11	239411	231411	230411	236411
		500	7	239407	231407	230407	236407
		>50 (100-300Hz)	10	239410	231410	230410	236410
		>50 (300-500Hz)	2	239402	231402	230402	236402
5	3P + N + G	110	4	239504	231504	230504	236504
		230	9	239509	231509	230509	236509
		400	6	239	231	230	236
		440	11	239511	231511	230511	236511
7	6P + G	400	6		231706	230706	

FEMALE CONNECTORS (Couplers)

	No. of Wires	Voltage AC	Clock Position of Ground Contact	WATERTIGHT (IP67)	SPLASHPROOF (IP44) with cable gland	SPLASHPROOF (IP44) with cable sleeve
3	2P + G	110	4	339304	331304	330304
		230	6	339306	331306	330306
		400	9	339309	331309	330309
4	3P + G	110	4	339404	331404	330404
		230	9	339409	331409	330409
		400	6	339406	331406	330406
		380/440*	3	339403*		
		440	11	339411	331411	330411
		500	7	339407	331407	330407
		>50 (100/300Hz)	10	339410	331410	330410
		>50 (300/500Hz)	2	339402	331402	330402
5	3P + N + G	110	4	339504	331504	330504
		230	9	339509	331509	330509
		400	6	339	331	330
		440	11	339511	331511	330511
7	6P + G	400	6		331706	330706

* Only for refrigerated containers.

FEMALE PANEL MOUNTED SOCKET-OUTLET

	No. of Wires	Voltage AC	Clock Position of Ground Contact	WATERTIGHT (IP67) Straight	WATERTIGHT (IP67) Angled 15°	WATERTIGHT (IP67) Angled 80°	SPLASHPROOF (IP44) Straight	SPLASHPROOF (IP44) Angled 15°	SPLASHPROOF (IP44) Angled 80°
3	2P + G	110	4	439304	539304	538304	430304	530304	534304
		230	6	439306	539306	538306	430306	530306	534306
		400	9	439309	539309	538309	430309	530309	534309
4	3P + G	110	4	439404	539404	538404	430404	530404	534404
		230	9	439409	539409	538409	430409	530409	534409
		400	6	439406	539406	538406	430406	530406	534406
		380/440*	3	439403*					
		440	11	439411	539411	538411	430411	530411	534411
		500	7	439407	539407	538407	430407	530407	534407
		>50 (100-300Hz)	10	439410	539410	538410	430410	530410	534410
		>50 (300-500Hz)	2	439402	539402	538402	430402	530402	534402
5	3P + N + G	110	4	439504	539504	538504	430504	530504	534504
		230	9	439509	539509	538509	430509	530509	534509
		400	6	439	539	538	430	530	534
		440	11	439511	539511	538511	430511	530511	534511
7	6P + G	400	6				431706		534706

Note: See page 28 for surface mount socket-outlets.

MALE APPLIANCE PLUG (Inlet)

	No. of Wires	Voltage AC	Clock Position of Ground Contact	WATERTIGHT (IP67) Angled 80°	WATERTIGHT (IP67) Surface Mount	SPLASHPROOF (IP44) Straight	SPLASHPROOF (IP44) Angled 80°	SPLASHPROOF (IP44) Surface Mount External Mounting	SPLASHPROOF (IP44) Surface Mount Internal Mounting
3	2P + G	110	4	639304	638304	635304	631304	630304	636304
		230	6	639306	638306	635306	631306	630306	636306
		400	9	639309	638309	635309	631309	630309	636309
4	3P + G	110	4	639404	638404	635404	631404	630404	636404
		230	9	639409	638409	635409	631409	630409	636409
		400	6	639406	638406	635406	631406	630406	636406
		380/440*	3	639403*	638403*				
		440	11	639411	638411	635411	631411	630411	636411
		500	7	639407	638407	635407	631407	630407	636407
		>50 (100-300Hz)	10	639410	638410	635410	631410	630410	636410
		>50 (300-500Hz)	2	639402	638402	635402	631402	630402	636402
5	3P + N + G	110	4	639504	638504	635504	631504	630504	636504
		230	9	639509	638509	635509	631509	630509	636509
		400	6	639	638	635	631	630	636
		440	11	639511	638511	635511	631511	630511	636511
7	6P + G	400	6			635706	631706	630706	636706

* Only for refrigerated containers.

MALE PLUGS

	No. of Wires	Voltage AC	Clock Position of Ground Contact	WATERTIGHT (IP67)	SPLASHPROOF (IP44) with cable gland	SPLASHPROOF (IP44) with cable sleeve
3	2P + G	110	4	269304	261304	260304
		230	6	269306	261306	260306
		400	9	269309	261309	260309
4	3P + G	110	4	269404	261404	260404
		230	9	269409	261409	260409
		400	6	269406	261406	260406
		440	11	269411	261411	260411
		500	7	269407	261407	260407
5	3P + N + G	110	4	269504	261504	260504
		230	9	269509	261509	260509
		400	6	269	261	260
		440	11	269511	261511	260511

FEMALE CONNECTORS (Couplers)

	No. of Wires	Voltage AC	Clock Position of Ground Contact	WATERTIGHT (IP67)	SPLASHPROOF (IP44) with cable gland	SPLASHPROOF (IP44) with cable sleeve
3	2P + G	110	4	369304	361304	360304
		230	6	369306	361306	360306
		400	9	369309	361309	360309
4	3P + G	110	4	369404	361404	360404
		230	9	369409	361409	360409
		400	6	369406	361406	360406
		440	11	369411	361411	360411
		500	7	369407	361407	360407
5	3P + N + G	110	4	369504	361504	360504
		230	9	369509	361509	360509
		400	6	369	361	360
		440	11	369511	361511	360511

FEMALE PANEL MOUNTED SOCKET-OUTLET

	No. of Wires	Voltage AC	Clock Position of Ground Contact	WATERTIGHT (IP67) Straight	WATERTIGHT (IP67) Angled 15°	WATERTIGHT (IP67) Angled 80°	SPLASHPROOF (IP44) Straight	SPLASHPROOF (IP44) Angled 15°	SPLASHPROOF (IP44) Angled 80°
3	2P + G	110	4	469304	569304	568304	460304	560304	564304
		230	6	469306	569306	568306	460306	560306	564306
		400	9	469309	569309	568309	460309	560309	564309
4	3P + G	110	4	469404	569404	568404	460404	560404	564404
		230	9	469409	569409	568409	460409	560409	564409
		400	6	469406	569406	568406	460406	560406	564406
		440	11	469411	569411	568411	460411	560411	564411
		500	7	469407	569407	568407	460407	560407	564407
5	3P + N + G	110	4	469504	569504	568504	460504	560504	564504
		230	9	469509	569509	568509	460509	560509	564509
		400	6	469	569	568	460	560	564
		440	11	469511	569511	568511	460511	560511	564511

Note: See page 28 for surface mount receptacles.

MALE APPLIANCE PLUG (Inlet)

	No. of Wires	Voltage AC	Clock Position of Ground Contact	WATERTIGHT (IP67) Angled 80°	WATERTIGHT (IP67) Surface Mount	SPLASHPROOF (IP44) Straight	SPLASHPROOF (IP44) Angled 80°
3	2P + G	110	4	669304	668304		661304
		230	6	669306	668306		661306
		400	9	669309	668309		661309
4	3P + G	110	4	669404	668404		661404
		230	9	669409	668409		661409
		400	6	669406	668406		661406
		440	11	669411	668411		661411
		500	7	669407	668407		661407
5	3P + N + G	110	4	669504	668504	665504	661504
		230	9	669509	668509	665509	661509
		400	6	669	668	665	661
		440	11	669511	668511	665511	661511

MALE PLUGS

No. of Wires		Voltage AC	Clock Position of Ground Contact	WATERTIGHT (IP67)
3	2P + G	110	4	279304
		230	6	279306
		400	9	279309
4	3P + G	110	4	279404
		230	9	279409
		400	6	279406
		440	11	279411
		500	7	279407
5	3P + N + G	110	4	279504
		230	9	279509
		400	6	279
		440	11	279511

FEMALE CONNECTORS (Couplers)

No. of Wires		Voltage AC	Clock Position of Ground Contact	WATERTIGHT (IP67)
3	2P + G	110	4	379304
		230	6	379306
		400	9	379309
4	3P + G	110	4	379404
		230	9	379409
		400	6	379406
		440	11	379411
		500	7	379407
5	3P + N + G	110	4	379504
		230	9	379509
		400	6	379
		440	11	379511

FEMALE PANEL MOUNTED SOCKET-OUTLET

	No. of Wires	Voltage AC	Clock Position of Ground Contact	WATERTIGHT (IP67) Straight	WATERTIGHT (IP67) Angled 15°
3	2P + G	110	4	479304	579304
		230	6	479306	579306
		400	9	479309	579309
4	3P + G	110	4	479404	579404
		230	9	479409	579409
		400	6	479406	579406
		440	11	479411	579411
		500	7	479407	579407
5	3P + N + G	110	4	479504	579504
		230	9	479509	579509
		400	6	479	579
		440	11	479511	579511

Note: See page 28 for surface mount receptacles.

MALE APPLIANCE PLUG (Inlet)

	No. of Wires	Voltage AC	Clock Position of Ground Contact	WATERTIGHT (IP67) Straight	WATERTIGHT (IP67) Surface Mount
3	2P + G	110	4	679304	678304
		230	6	679306	678306
		400	9	679309	678309
4	3P + G	110	4	679404	678404
		230	9	679409	678409
		400	6	679406	678406
		440	11	679411	678411
		500	7	679407	678407
5	3P + N + G	110	4	679504	678504
		230	9	679509	678509
		400	6	679	678
		440	11	679511	678511

SURFACE MOUNT SOCKET-OUTLETS (Internal Mounting)

	No. of Wires	Voltage AC	Clock Position of Ground Contact	WATERTIGHT (IP67) 16 Amps	32 Amps	63 Amps	125 Amps	SPLASHPROOF (IP44) 16 Amps	32 Amps	63 Amps
3	2P + G	110	4	119304	139304		179304	111304	131304	
		230	6	119306	139306		179306	111306	131306	
		400	9	119309	139309		179309	111309	131309	
4	3P + G	110	4	119404	139404	169404	179404	111404	131404	161404
		230	9	119409	139409	169409	179409	111409	131409	161409
		400	6	119406	139406	169406	179406	111406	131406	161406
		440	11	119411	139411	169411	179411	111411	131411	161411
		500	7	119407	139407	169407	179407	111407	131407	161407
		>50 (100-300Hz)	10	119410	139410	169410	179410	111410	131410	161410
		>50 (300-500Hz)	2	119402	139402	169402	179402	111402	131402	161402
5	3P + N + G	110	4	119504	139504	169504	179504	111504	131504	161504
		230	9	119509	139509	169509	179509	111509	131509	161509
		400	6	119	139	169	179	111	131	161
		440	11	119511	139511	169511	179511	111511	131511	161511
7	6P + G	400	6					111706	131706	

SURFACE MOUNT SOCKET-OUTLETS (External Mounting)

	No. of Wires	Voltage AC	Clock Position of Ground Contact	SPLASHPROOF (IP44) 16 Amps	32 Amps
3	2P + G	110	4	110304	130304
		230	6	110306	130306
		400	9	110309	130309
4	3P + G	110	4	110404	130404
		230	9	110409	130409
		400	6	110406	130406
		440	11	110411	130411
		500	7	110407	130407
		>50 (100-300Hz)	10	110410	130410
		>50 (300-500Hz)	2	110402	130402
5	3P + N + G	110	4	110504	130504
		230	9	110509	130509
		400	6	110	130
		440	11	110511	130511
7	6P + G	400	6	110706	130706

TABLE 1 Cable and Conductor Strip Length

		Device Rating			
	North American	20A	30A	60A	100A
	International	16A	32A	63A	125A
Outer Jacket Strip Length	inch	2	2 ½	3	4
	mm	50	63	76	102
Conductor Strip Length	inch	½	½	¾	1 ⅛
	mm	12	12	19	28
Pilot Conductor Strip Length	inch			7/16	⅝
	mm			11	16

TABLE 2 Maximum Torque applied to terminal screws

		Device Rating			
	North American	20A	30A	60A	100A
	International	16A	32A	63A	125A
Torque Terminal Screw	lb. - in.	7.1	7.1	17.6	35.3
	N - m	0.8	0.8	2	4
Torque Pilot Screw	lb. - in.			7.1	7.1
	N - m			0.8	0.8

TABLE 4 Metric and AWG/MCM conductor size equivalents

Conductor Size		Test
mm²	AWG/MCM	Range (A)
1,0	18	0-8
1,5	16	8-12
2,5	14	12-15
2,5	12	15-20
4,0	10	20-25
6,0	10	25-32
10	8	32-50
16	6	50-65
25	4	65-85
35	3	85-100
35	2	100-115
50	1	115-130
50	1/0	130-150
70	2/0	150-175
95	3/0	175-200
95	4/0	200-225
120	250	225-250
150	300	250-275
185	350	275-300
185	400	300-350
240	500	350-400

TABLE 3 Cable and Conductor Range

Amps		Poles and	From		To			Cord Grip Range			
								With Cable Gland		With Cable SLeeve	
N.A.	Intl.	Wires	AWG	Type	AWG	Type		North American	International	North American	International
16	20	2P3W	16	S	10	S	inch	0.275 - 0.530	0.275 - 0.530	0.275 - 0.675	0.275 - 0.675
							mm	7 - 13.5	7 - 13.5	7 - 17	7 - 17
		3P4W	16	S	10	S	inch	.395 - .825	0.275 - 0.630	0.315 - 0.800	0.315 - 0.800
							mm	10 - 21	7 - 16	8 - 20	8 - 20
		4P5W	16	S	10	S	inch	.395 - .825	0.275 - 0.630	0.315 - 0.800	0.315 - 0.800
							mm	10 - 21	7 - 16	8 - 20	8 - 20
30	32	2P3W	12	S	8	S	inch	.395 - .825	.395 - .825	0.590 - 0.950	0.435 - 0.950
							mm	10 - 21	10 - 21	15 - 24	11 - 24
		3P4W	12	S	8	S	inch	0.650 - 1.10	.395 - .825	0.590 - 0.950	0.435 - 0.950
							mm	16.5 - 28	10 - 21	15 - 24	11 - 24
		4P5W	12	S	8	S	inch	0.650 - 1.10	.395 - .825	0.590 - 0.950	0.435 - 0.950
							mm	16.5 - 28	10 - 21	15 - 24	11 - 24
60*	63*	2P3W	8	S	4	S or W	inch	.650 - 1.50	.650 - 1.50	0.635 - 1.30	0.600 - 1.30
							mm	16.5 - 38	16.5 - 38	16 - 33	15 - 33
		3P4W	8	S	4	S or W	inch	.650 - 1.50	.650 - 1.50	0.635 - 1.30	0.600 - 1.30
							mm	16.5 - 38	16.5 - 38	16 - 33	15 - 33
		4P5W	8	S	4	S or W	inch	.650 - 1.50	.650 - 1.50	0.635 - 1.30	0.600 - 1.30
							mm	16.5 - 38	16.5 - 38	16 - 33	15 - 33
100*	125*	2P3W	6	S or W	2/0	S or W	inch	.950 - 1.90	.950 - 1.90		
							mm	24 - 48	24 - 48		
		3P4W	6	S or W	2/0	S or W	inch	.950 - 1.90	.950 - 1.90		
							mm	24 - 48	24 - 48		
		4P5W	6	S or W	2/0	S or W	inch	.950 - 1.90	.950 - 1.90		
							mm	24 - 48	24 - 48		

* Pilot conductor 16 to 8 AWG

WATERTIGHT PLUGS (IP67)

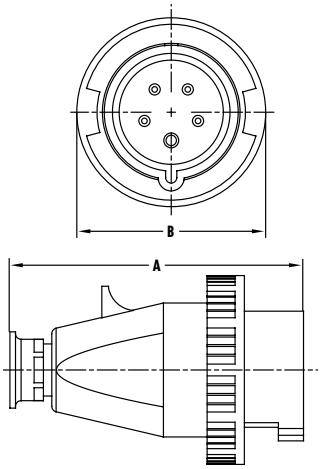

Amps N.A.	Amps Intl.	Type		Dimensions A	Dimensions B	Cord Grip Range N. American	Cord Grip Range International
20	16	3 Wire	inch	4.96	2.83	0.275 - 0.530	0.275 - 0.530
			mm	126	72	7.0 - 13.5	7.0 - 13.5
20	16	4 Wire	inch	5.20	3.19	0.395 - 0.825	0.275 - 0.630
			mm	132	81	10.0 - 21.0	7.0 - 16.0
20	16	5 Wire	inch	5.20	3.46	0.395 - 0.825	0.275 - 0.630
			mm	132	88	10.0 - 21.0	7.0 - 16.0
30	32	3 Wire	inch	6.14	3.78	0.395 - 0.825	0.395 - 0.825
			mm	156	96	10.0 - 21.0	10.0 - 21.0
30	32	4 Wire	inch	6.14	3.78	0.650 - 1.10	0.395 - 0.825
			mm	156	96	16.5 - 28.0	10.0 - 21.0
30	32	5 Wire	inch	6.14	4.06	0.650 - 1.10	0.395 - 0.825
			mm	156	103	16.5 - 28.0	10.0 - 21.0
60	63	3, 4, & 5 Wire	inch	9.57	4.33	0.650 - 1.50	0.650 - 1.50
			mm	243	110	16.5 - 38.0	16.5 - 38.0
100	125	3, 4, & 5 Wire	inch	12.40	5.12	0.950 - 1.90	0.950 - 1.90
			mm	315	130	24.0 - 48.0	24.0 - 48.0

SPLASHPROOF PLUGS (IP44)
(with cable gland)

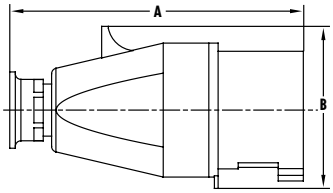

Amps N.A.	Amps Intl.	Type		Dimensions A	Dimensions B	Cord Grip Range N. American	Cord Grip Range International
20	16	3 Wire	inch	4.84	2.36	0.275 - 0.530	0.275 - 0.530
			mm	123	60	7.0 - 13.5	7.0 - 13.5
20	16	4 Wire	inch	5.16	2.68	0.395 - 0.825	0.275 - 0.630
			mm	131	68	10.0 - 21.0	7.0 - 16.0
20	16	5 & 7 Wire	inch	5.16	2.95	0.395 - 0.825	0.275 - 0.630
			mm	131	75	10.0 - 21.0	7.0 - 16.0
30	32	3 Wire	inch	6.10	3.11	0.395 - 0.825	0.395 - 0.825
			mm	155	79	10.0 - 21.0	10.0 - 21.0
30	32	4 Wire	inch	6.10	3.11	0.650 - 1.10	0.395 - 0.825
			mm	155	79	16.5 - 28.0	10.0 - 21.0
30	32	5 & 7 Wire	inch	6.10	3.46	0.650 - 1.10	0.395 - 0.825
			mm	155	88	16.5 - 28.0	10.0 - 21.0
60	63	3, 4, & 5 Wire	inch	9.45	3.82	0.650 - 1.50	0.650 - 1.50
			mm	240	97	16.5 - 38.0	16.5 - 38.0

SPLASHPROOF PLUGS (IP44)
(with cable sleeve)

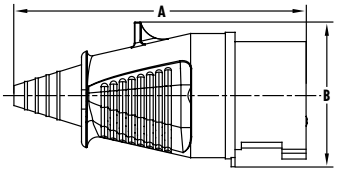

Amps N.A.	Amps Intl.	Type		Dimensions A	Dimensions B	Cord Grip Range N. American	Cord Grip Range International
20	16	3 Wire	inch	5.63	2.36	0.275 - 0.675	0.275 - 0.675
			mm	143	60	7.0 - 17.0	7.0 - 17.0
20	16	4 Wire	inch	5.79	2.68	0.315 - 0.800	0.315 - 0.800
			mm	147	68	8.0 - 20.0	8.0 - 20.0
20	16	5 & 7 Wire	inch	6.02	2.95	0.315 - 0.800	0.315 - 0.800
			mm	153	75	8.0 - 20.0	8.0 - 20.0
30	32	3 Wire	inch	7.13	3.11	0.590 - 0.950	0.435 - 0.950
			mm	181	79	15.0 - 24.0	11.0 - 24.0
30	32	4 Wire	inch	7.13	3.11	0.590 - 0.950	0.435 - 0.95
			mm	181	79	15.0 - 24.0	11.0 - 24.0
30	32	5 & 7 Wire	inch	7.13	3.46	0.590 - 0.950	0.435 - 0.95
			mm	181	88	15.0 - 24.0	11.0 - 24.0
60	63	3, 4, & 5 Wire	inch	9.92	3.82	0.635 - 1.30	0.600 - 1.30
			mm	252	97	16.0 - 33.0	15.0 - 33.0

WATERTIGHT CONNECTORS (IP67)

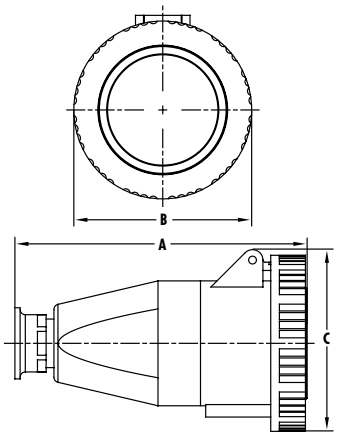

Amps N.A.	Amps Intl.	Type		Dimensions A	Dimensions B	Dimensions C	Cord Grip Range N. American	Cord Grip Range International
20	16	3 Wire	inch	5.35	2.83	3.07	0.275 - 0.530	0.275 - 0.530
			mm	136	72	78	7.0 - 13.5	7.0 - 13.5
20	16	4 Wire	inch	5.63	3.19	3.35	0.395 - 0.825	0.275 - 0.630
			mm	143	81	85	10.0 - 21.0	7.0 - 16.0
20	16	5 Wire	inch	5.63	3.46	3.58	0.395 - 0.825	0.275 - 0.630
			mm	143	88	91	10.0 - 21.0	7.0 - 16.0
30	32	3 Wire	inch	6.97	3.78	3.78	0.395 - 0.825	0.395 - 0.825
			mm	177	96	96	10.0 - 21.0	10.0 - 21.0
30	32	4 Wire	inch	6.97	3.78	3.78	0.650 - 1.10	0.395 - 0.825
			mm	177	96	96	16.5 - 28.0	10.0 - 21.0
30	32	5 Wire	inch	6.97	4.06	4.13	0.650 - 1.10	0.395 - 0.825
			mm	177	103	105	16.5 - 28.0	10.0 - 21.0
60	63	3, 4, & 5 Wire	inch	10.0	4.33	4.61	0.650 - 1.50	0.650 - 1.50
			mm	255	110	117	16.5 - 38.0	16.5 - 38.0
100	125	3, 4, & 5 Wire	inch	13.1	5.12	5.12	0.950 - 1.90	0.950 - 1.90
			mm	332	130	130	24.0 - 48.0	24.0 - 48.0

SPLASHPROOF CONNECTORS (IP44)
(with cable gland)

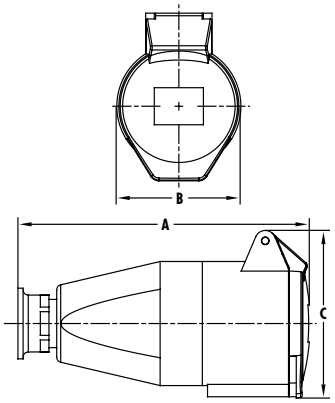

Amps N.A.	Amps Intl.	Type		Dimensions A	Dimensions B	Dimensions C	Cord Grip Range N. American	Cord Grip Range International
20	16	3 Wire	inch	5.32	2.01	2.68	0.275 - 0.530	0.275 - 0.530
			mm	135	51	68	7.0 - 13.5	7.0 - 13.5
20	16	4 Wire	inch	5.95	2.56	3.35	0.395 - 0.825	0.275 - 0.630
			mm	151	65	85	10.0 - 21.0	7.0 - 16.0
20	16	5 & 7 Wire	inch	5.95	2.56	3.35	0.395 - 0.825	0.275 - 0.630
			mm	151	65	85	10.0 - 21.0	7.0 - 16.0
30	32	3 Wire	inch	6.73	2.83	3.58	0.395 - 0.825	0.395 - 0.825
			mm	171	72	91	10.0 - 21.0	10.0 - 21.0
30	32	4 Wire	inch	6.73	2.83	3.58	0.650 - 1.10	0.395 - 0.825
			mm	171	72	91	16.5 - 28.0	10.0 - 21.0
30	32	5 & 7 Wire	inch	6.73	2.83	3.86	0.650 - 1.10	0.395 - 0.825
			mm	171	72	98	16.5 - 28.0	10.0 - 21.0
60	63	3, 4, & 5 Wire	inch	10.0	3.78	4.49	0.650 - 1.50	0.650 - 1.50
			mm	255	96	114	16.5 - 38.0	16.5 - 38.0

SPLASHPROOF CONNECTORS (IP44)
(with cable sleeve)

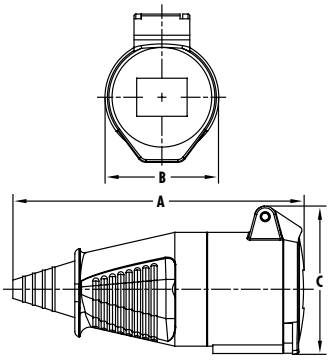

Amps N.A.	Amps Intl.	Type		Dimensions A	Dimensions B	Dimensions C	Cord Grip Range N. American	Cord Grip Range International
20	16	3 Wire	inch	6.06	2.01	2.69	0.275 - 0.675	0.275 - 0.675
			mm	154	51	68.4	7.0 - 17.0	7.0 - 17.0
20	16	4 Wire	inch	6.54	2.56	2.97	0.315 - 0.800	0.315 - 0.800
			mm	166	65	75.4	8.0 - 20.0	8.0 - 20.0
20	16	5 & 7 Wire	inch	6.54	2.56	3.29	0.315 - 0.800	0.315 - 0.800
			mm	166	65	83.5	8.0 - 20.0	8.0 - 20.0
30	32	3 Wire	inch	7.72	2.83	3.54	0.590 - 0.950	0.435 - 0.950
			mm	196	72	90	15.0 - 24.0	11.0 - 24.0
30	32	4 Wire	inch	7.72	2.83	3.54	0.590 - 0.950	0.435 - 0.95
			mm	196	72	90	15.0 - 24.0	11.0 - 24.0
30	32	5 & 7 Wire	inch	7.72	2.83	3.78	0.590 - 0.950	0.435 - 0.95
			mm	196	72	96	15.0 - 24.0	11.0 - 24.0
60	63	3, 4, & 5 Wire	inch	10.5	3.78	4.41	0.635 - 1.30	0.600 - 1.30
			mm	266	96	112	16.0 - 33.0	15.0 - 33.0

WATERTIGHT RECEPTACLE (IP67)
(Straight)

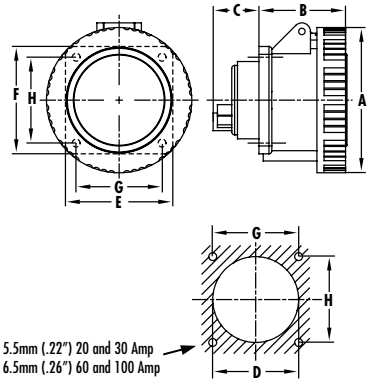

Amps N.A.	Amps Intl.	Type		Dimensions A	B	C	D	E	F	G	H
20	16	3 Wire	inch	2.82	2.05	1.10	1.81	2.44	2.44	1.85	1.85
			mm	71.5	52	28	46	62	62	47	47
20	16	4 Wire	inch	31.9	2.05	1.10	2.36	2.95	2.95	2.36	2.36
			mm	81	52	28	60	75	75	60	60
20	16	5 Wire	inch	3.46	2.05	1.10	2.36	2.95	2.95	2.36	2.36
			mm	88	52	28	60	75	75	60	60
30	32	3 & 4 Wire	inch	3.78	2.56	1.06	2.36	2.95	2.95	2.36	2.36
			mm	96	65	27	60	75	75	60	60
30	32	5 Wire	inch	4.06	2.56	1.06	2.36	2.95	2.95	2.36	2.36
			mm	103	65	27	60	75	75	60	60
60	63	3, 4, & 5 Wire	inch	4.29	3.27	2.05	3.54	3.94	4.21	3.03	3.35
			mm	109	83	52	90	100	107	77	85
100	125	3, 4, & 5 Wire	inch	5.12	3.78	2.52	3.54	4.49	4.49	3.54	3.54
			mm	130	96	64	90	114	114	90	90

WATERTIGHT RECEPTACLE (IP67)
(Angled 15°)

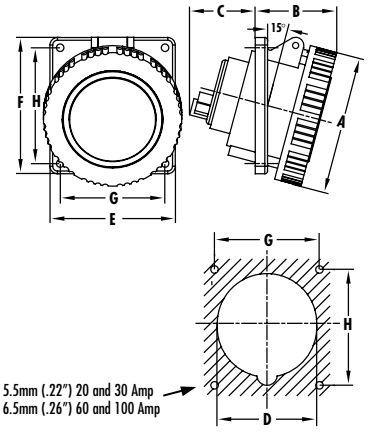

Amps N.A.	Amps Intl.	Type		Dimensions A	B	C	D	E	F	G	H
20	16	3 Wire	inch	2.82	1.93	1.61	2.01	2.44	2.68	1.85	1.85
			mm	71.5	49	41	51	62	68	47	47
20	16	4 Wire	inch	3.19	2.05	1.50	2.87	3.62	3.94	3.03	3.35
			mm	81	52	38	73	92	100	77	85
20	16	5 Wire	inch	3.46	2.05	1.50	2.87	3.62	3.94	3.03	3.35
			mm	88	52	38	73	92	100	77	85
30	32	3 & 4 Wire	inch	3.78	2.20	1.85	2.87	3.62	3.94	3.03	3.35
			mm	96	56	47	73	92	100	77	85
30	32	5 Wire	inch	4.06	2.36	1.85	2.87	3.62	3.94	3.03	3.35
			mm	103	60	47	73	92	100	77	85
60	63	3, 4, & 5 Wire	inch	4.29	3.23	2.52	3.19	3.94	4.21	3.03	3.35
			mm	109	82	64	81	100	107	77	85
100	125	3, 4, & 5 Wire	inch	5.12	3.70	2.95	3.54	4.49	4.49	3.54	3.54
			mm	130	94	75	90	114	114	90	90

WATERTIGHT RECEPTACLE (IP67)
(Angled 80°)

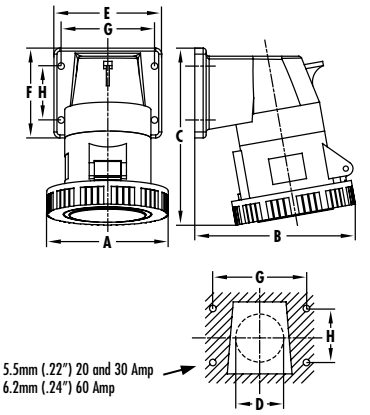

Amps N.A.	Amps Intl.	Type		Dimensions A	B	C	D max	E	F	G	H
20	16	3 Wire	inch	2.83	3.46	4.29	1.18	2.56	2.05	2.17	1.18
			mm	72	88	109	30	65	52	55	30
20	16	4 Wire	inch	3.19	4.25	4.84	1.50	3.15	2.60	2.68	1.57
			mm	81	108	123	38	80	66	68	40
20	16	5 Wire	inch	3.46	4.25	4.84	1.50	3.15	2.60	2.68	1.57
			mm	88	108	123	38	80	66	68	40
30	32	3 & 4 Wire	inch	3.78	4.76	5.71	1.73	3.54	2.95	3.07	1.77
			mm	96	121	145	44	90	75	78	45
30	32	5 Wire	inch	4.06	4.84	5.71	1.73	3.54	2.95	3.07	1.77
			mm	103	123	145	44	90	75	78	45
60	63	3, 4, & 5 Wire	inch	4.33	5.63	7.99	2.20	4.49	4.49	3.54	3.54
			mm	110	143	203	56	114	114	90	90

SPLASHPROOF RECEPTACLES (IP44)
(Straight)

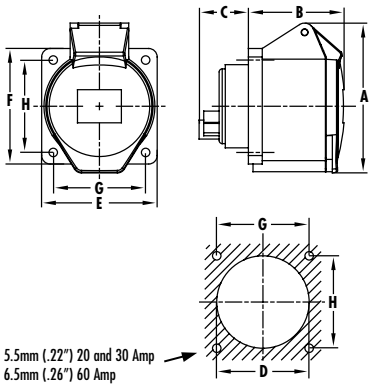

Amps N.A.	Amps Intl.	Type		Dimensions A	B	C	D	E	F	G	H
20	16	3 Wire	inch	2.68	2.05	1.10	1.81	2.44	2.44	1.85	1.85
			mm	68	52	28	46	62	62	47	47
20	16	4 & 5 Wire	inch	3.35	2.09	1.10	2.36	2.95	2.95	2.36	2.36
			mm	85	53	28	60	75	75	60	60
20	16	7 Wire	inch	3.35	2.09	1.10	2.36	3.15	3.15	2.36	2.36
			mm	85	53	28	60	80	80	60	60
30	32	3 & 4 Wire	inch	3.58	2.56	1.06	2.36	2.95	2.95	2.36	2.36
			mm	91	65	27	60	75	75	60	60
30	32	5 Wire	inch	3.86	2.56	1.06	2.36	2.95	2.95	2.36	2.36
			mm	98	65	27	60	75	75	60	60
30	32	7 Wire	inch	3.86	2.56	1.06	2.36	3.15	3.15	2.36	2.36
			mm	98	65	27	60	80	80	60	60
60	63	3, 4, & 5 Wire	inch	4.49	3.35	2.05	3.54	3.94	4.21	3.03	3.35
			mm	114	85	52	90	100	107	77	85

SPLASHPROOF RECEPTACLE (IP44)
(Angled 15°)

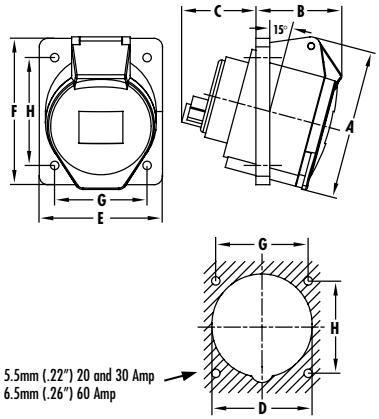

Amps N.A.	Amps Intl.	Type		Dimensions A	B	C	D	E	F	G	H
20	16	3 Wire	inch	2.68	1.77	1.61	2.01	2.44	2.68	1.85	1.85
			mm	68	45	41	51	62	68	47	47
20	16	4 Wire	inch	3.35	2.01	1.50	2.36	2.95	2.95	2.36	2.36
			mm	85	51	38	60	75	75	60	60
20	16	5 Wire	inch	3.35	2.01	1.50	2.56	2.95	3.35	2.36	2.36
			mm	85	51	38	65	75	85	60	60
30	32	3 Wire	inch	3.58	2.05	1.85	2.64	2.95	3.54	2.36	2.36
			mm	91	52	47	67	75	90	60	60
30	32	4 Wire	inch	3.85	2.05	1.85	2.64	2.95	3.54	2.36	2.36
			mm	91	52	47	67	75	90	60	60
30	32	5 Wire	inch	3.86	2.20	1.85	2.70	3.15	3.74	2.36	2.36
			mm	98	56	47	68.5	80	95	60	60
60	63	3, 4, & 5 Wire	inch		3.11	2.52	3.19	3.94	4.21	3.03	3.35
			mm		79	64	81	100	107	77	85

SPLASHPROOF RECEPTACLE (IP44)
(Angled 80°)

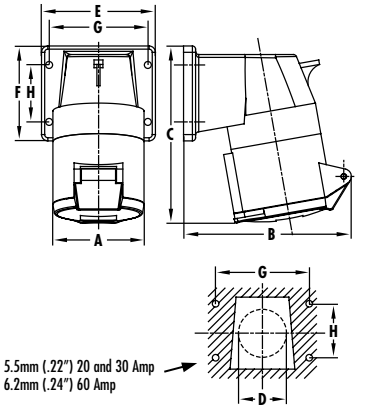

Amps N.A.	Amps Intl.	Type		Dimensions A	B	C	D max	E	F	G	H
20	16	3 Wire	inch	2.01	3.43	4.57	1.18	2.56	2.05	2.17	1.18
			mm	51	87	116	30	65	52	55	30
20	16	4 Wire	inch	2.56	4.33	4.80	1.50	3.15	2.60	2.68	1.57
			mm	65	110	122	38	80	66	68	40
20	16	5 & 7 Wire	inch	2.56	4.33	4.80	1.50	3.15	2.60	2.68	1.57
			mm	65	110	122	38	80	66	68	40
30	32	3 Wire	inch	2.83	4.72	5.55	1.73	3.54	2.95	3.07	1.77
			mm	72	120	141	44	90	75	78	45
30	32	4 Wire	inch	2.83	4.72	5.55	1.73	3.54	2.95	3.07	1.77
			mm	72	120	141	44	90	75	78	45
30	32	5 & 7 Wire	inch	2.83	4.88	5.59	1.73	3.54	2.95	3.07	1.77
			mm	72	124	142	44	90	75	78	45
60	63	3, 4, & 5 Wire	inch	3.78	5.51	7.64	2.20	4.49	4.49	3.54	3.54
			mm	96	140	194	56	114	114	90	90

WATERTIGHT INLETS (IP67)
(Straight)

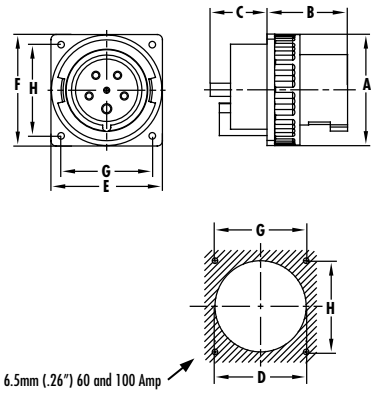

Amps N.A.	Amps Intl.	Type		Dimensions A	B	C	D	E	F	G	H
100	125	3 Wire	inch	5.12	3.70	2.20	3.54	5.12	5.12	4.09	4.09
			mm	130	94	56	90	130	130	104	104
100	125	4 Wire	inch	5.12	3.70	2.20	3.54	5.12	5.12	4.09	4.09
			mm	130	94	56	90	130	130	104	104
100	125	5 Wire	inch	5.12	3.70	2.20	3.54	5.12	5.12	4.09	4.09
			mm	130	94	56	90	130	130	104	104

WATERTIGHT INLETS (IP67)
(Angled 80°)

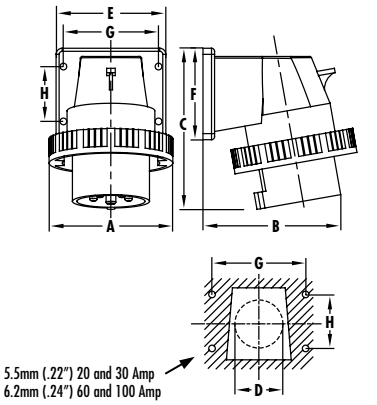

Amps N.A.	Amps Intl.	Type		Dimensions A	B	C	D (max)	E	F	G	H
20	16	3 Wire	inch	2.83	3.19	3.86	1.18	2.56	2.05	2.17	1.18
			mm	72	81	98	30	65	52	55	30
20	16	4 Wire	inch	3.19	3.90	4.33	1.50	3.15	2.60	2.68	1.57
			mm	81	99	110	38	80	66	68	40
20	16	5 Wire	inch	3.50	4.06	4.45	1.50	3.15	2.60	2.68	1.57
			mm	89	103	113	38	80	66	68	40
30	32	3 Wire	inch	3.78	4.45	5.12	1.73	3.54	2.95	3.07	1.77
			mm	96	113	130	44	90	75	78	45
30	32	4 Wire	inch	3.78	4.45	5.12	1.73	3.54	2.95	3.07	1.77
			mm	96	113	130	44	90	75	78	45
30	32	5 Wire	inch	4.02	4.61	5.12	1.73	3.54	2.95	3.07	1.77
			mm	102	117	130	44	90	75	78	45
60	63	3, 4, & 5 Wire	inch	4.33	5.00	7.20	2.20	4.49	4.49	3.54	3.54
			mm	110	127	183	56	114	114	90	90

WATERTIGHT INLETS (IP67)
(Surface Mount, Angled 80°)

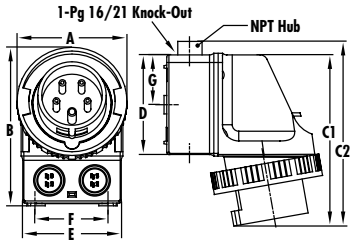

Amps N.A.	Amps Intl.	Type		Dimensions A	B	C[1]	C[2]	D	E	F	G	Hub Size*
20	16	3 Wire	inch	2.83	5.51	6.06	6.73	3.78	3.74	2.62	1.87	3/4"
			mm	72	140	154	171	96	95	66.5	47.5	
20	16	4 Wire	inch	3.19	5.51	6.06	6.73	3.78	3.74	2.62	1.87	3/4"
			mm	81	140	154	171	96	95	66.5	47.5	
20	16	5 Wire	inch	3.46	5.51	6.06	6.73	3.78	3.74	2.62	1.87	3/4"
			mm	88	140	154	171	96	95	66.5	47.5	
30	32	3 Wire	inch	3.78	5.79	6.46	7.13	3.78	3.74	2.62	1.87	3/4"
			mm	96	147	164	181	96	95	66.5	47.5	
30	32	4 Wire	inch	3.78	5.79	6.46	7.13	3.78	3.74	2.62	1.87	3/4"
			mm	96	147	164	181	96	95	66.5	47.5	
30	32	5 Wire	inch	4.06	5.91	6.46	7.13	3.78	3.74	2.62	1.87	3/4"
			mm	103	150	164	181	96	95	66.5	47.5	

* North American devices supplied with NPT Hub.

SPLASHPROOF INLETS (IP44)
(Straight)

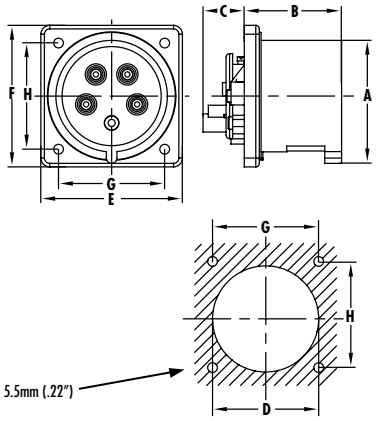

Amps N.A.	Amps Intl.	Type		Dimensions A	B	C	D	E	F	G	H
20	16	3 Wire	inch	1.85	1.85	0.87	1.97	2.44	2.44	1.85	1.85
			mm	47	47	22	50	62	62	47	47
20	16	4 Wire	inch	2.09	1.85	0.87	2.64	3.15	3.15	2.36	2.36
			mm	53	47	22	67	80	80	60	60
20	16	5 & 7 Wire	inch	2.40	1.85	0.87	2.64	3.15	3.15	2.36	2.36
			mm	61	47	22	67	80	80	60	60
30	32	3 Wire	inch	2.48	2.20	0.87	2.80	3.15	3.15	2.36	2.36
			mm	63	56	22	71	80	80	60	60
30	32	4 Wire	inch	2.48	2.20	0.87	2.80	3.15	3.15	2.36	2.36
			mm	63	56	22	71	80	80	60	60
30	32	5 & 7 Wire	inch	2.72	2.20	0.87	2.80	3.15	3.15	2.36	2.36
			mm	69	56	22	71	80	80	60	60
60	63	5 Wire	inch	2.99	3.27	1.14	3.39	4.17	4.33	3.54	3.54
			mm	76	83	29	86	106	110	90	90

SPLASHPROOF INLETS (IP44)
(Angled 80°)

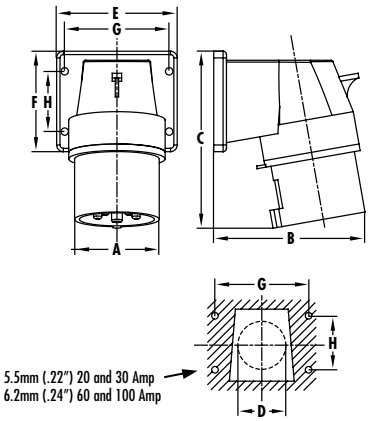

Amps N.A.	Amps Intl.	Type		Dimensions A	B	C	D (max)	E	F	G	H
20	16	3 Wire	inch	1.71	2.83	3.82	1.18	2.56	2.05	2.17	1.18
			mm	43.5	72	97	30	65	52	55	30
20	16	4 Wire	inch	1.97	3.54	4.33	1.50	3.15	2.60	2.68	1.57
			mm	50	90	110	38	80	66	68	40
20	16	5 & 7 Wire	inch	2.20	3.62	4.33	1.50	3.15	2.60	2.68	1.57
			mm	56	92	110	38	80	66	68	40
30	32	3 Wire	inch	2.24	4.06	5.08	1.73	3.54	2.95	3.07	1.77
			mm	57	103	129	44	90	75	78	45
30	32	4 Wire	inch	2.24	4.06	5.08	1.73	3.54	2.95	3.07	1.77
			mm	57	103	129	44	90	75	78	45
30	32	5 & 7 Wire	inch	2.52	4.06	5.08	1.73	3.54	2.95	3.07	1.77
			mm	64	103	129	44	90	75	78	45
60	63	3, 4, & 5 Wire	inch	2.72	4.57	7.28	2.20	4.49	4.49	3.54	3.54
			mm	69	116	185	56	114	114	90	90

SPLASHPROOF INLETS (IP44)
(Surface Mount, Angled 80°)

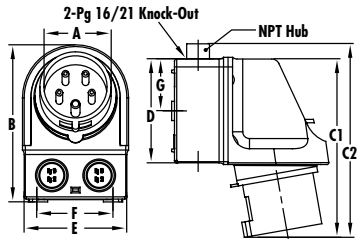

Amps N.A.	Amps Intl.	Type		Dimensions A	B	C[1]	C[2]	D	E	F	G	Hub Size*
20	16	4 Wire	inch	1.97	5.51	5.95	6.61	3.78	3.74	2.62	1.87	3/4"
			mm	50	140	151	168	96	95	66.5	47.5	
20	16	5 & 7 Wire	inch	2.20	5.51	5.95	6.61	3.78	3.74	2.62	1.87	3/4"
			mm	56	140	151	168	96	95	66.5	47.5	
30	32	3 Wire	inch	2.24	5.51	6.30	6.97	3.78	3.74	2.62	1.87	3/4"
			mm	57	140	160	177	96	95	66.5	47.5	
30	32	4 Wire	inch	2.24	5.51	6.30	6.97	3.78	3.74	2.62	1.87	3/4"
			mm	57	140	160	177	96	95	66.5	47.5	
30	32	5 & 7 Wire	inch	2.52	5.51	6.30	6.97	3.78	3.74	2.62	1.87	3/4"
			mm	64	140	160	177	96	95	66.5	47.5	

* North American devices supplied with NPT Hub.

WATERTIGHT RECEPTACLES (IP67)
(Surface Mount, Angled 80°)

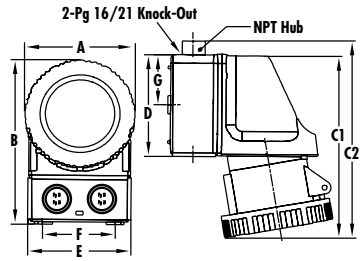

Amps N.A.	Amps Intl.	Type		Dimensions A	B	C[1]	C[2]	D	E	F	G	Hub Size*
20	16	3 Wire	inch	2.83	5.51	6.46	7.13	3.78	3.74	2.62	1.87	3/4″
			mm	72	140	164	181	96	95	66.5	47.5	
		4 Wire	inch	3.19	5.67	6.46	7.13	3.78	3.74	2.62	1.87	3/4″
			mm	81	144	164	181	96	95	66.5	47.5	
		5 Wire	inch	3.46	5.79	6.46	7.13	3.78	3.74	2.62	1.87	3/4″
			mm	88	147	164	181	96	95	66.5	47.5	
30	32	3 Wire	inch	3.78	6.06	6.93	7.60	3.78	3.74	2.62	1.87	3/4″
			mm	96	154	176	193	96	95	66.5	47.5	
		4 Wire	inch	3.78	6.06	6.93	7.60	3.78	3.74	2.62	1.87	3/4″
			mm	96	154	176	193	96	95	66.5	47.5	
		5 Wire	inch	4.06	6.14	6.93	7.60	3.78	3.74	2.62	1.87	3/4″
			mm	103	156	176	193	96	95	66.5	47.5	

WATERTIGHT RECEPTACLES (IP67)
(Surface Mount, Angled 80°)

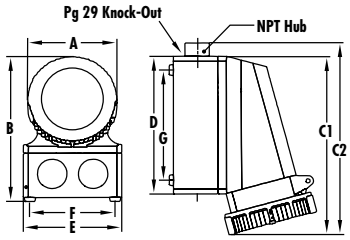

Amps N.A.	Amps Intl.	Type		Dimensions A	B	C[1]	C[2]	D	E	F	G	Hub Size*
60	63	4 Wire	inch	4.33	7.01	8.82	9.76	6.77	4.76	4.09	5.35	1 1/4″
			mm	110	178	224	248	172	121	104	136	
		5 Wire	inch	4.33	7.01	8.82	9.76	6.77	4.76	4.09	5.35	1 1/4″
			mm	110	178	224	248	172	121	104	136	

WATERTIGHT RECEPTACLES (IP67)
(Surface Mount, Angled 80°)

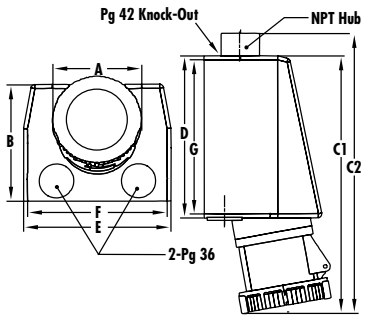

Amps N.A.	Amps Intl.	Type		Dimensions A	B	C[1]	C[2]	D	E	F	G	Hub Size*
100	125	3 Wire	inch	5.12	7.48	16.0	16.9	10.4	8.66	7.87	9.45	2″
			mm	130	190	406	430	263	220	200	240	
		4 Wire	inch	5.12	7.48	16.0	16.9	10.4	8.66	7.87	9.45	2″
			mm	130	190	406	430	263	220	200	240	
		5 Wire	inch	5.12	7.48	16.0	16.9	10.4	8.66	7.87	9.45	2″
			mm	130	190	406	430	263	220	200	240	

* North American devices supplied with NPT Hub.

SPLASHPROOF RECEPTACLES (IP44)
(Surface Mount, Angled 80°)

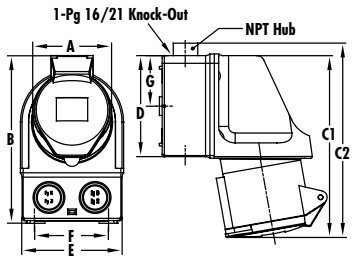

Amps N.A.	Amps Intl.	Type		Dimensions A	B	C[1]	C[2]	D	E	F	G	Hub Size*
20	16	3 Wire	inch	2.01	5.51	6.30	6.97	3.78	3.74	2.62	1.87	3/4″
			mm	51	140	160	177	96	95	66.5	47.5	
20	16	4 Wire	inch	2.56	5.63	6.46	7.13	3.78	3.74	2.62	1.87	3/4″
			mm	65	143	164	181	96	95	66.5	47.5	
20	16	5 & 7 Wire	inch	2.56	5.75	6.46	7.13	3.78	3.74	2.62	1.87	3/4″
			mm	65	146	164	181	96	95	66.5	47.5	
30	32	3 Wire	inch	2.83	6.06	6.81	7.48	3.78	3.74	2.62	1.87	3/4″
			mm	72	154	173	190	96	95	66.5	47.5	
30	32	4 Wire	inch	2.83	6.06	6.81	7.48	3.78	3.74	2.62	1.87	3/4″
			mm	72	154	173	190	96	95	66.5	47.5	
30	32	5 & 7 Wire	inch	2.83	6.18	6.81	7.48	3.78	3.74	2.62	1.87	3/4″
			mm	72	157	173	190	96	95	66.5	47.5	

SPLASHPROOF RECEPTACLES (IP44)
(Surface Mount, Angled 80°)

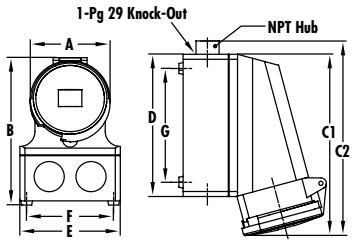

Amps N.A.	Amps Intl.	Type		Dimensions A	B	C[1]	C[2]	D	E	F	G	Hub Size*
60	63	4 Wire	inch	3.78	7.01	8.66	9.61	6.77	4.76	4.09	5.35	1 1/4″
			mm	96	178	220	244	172	121	104	136	
60	63	5 Wire	inch	3.78	7.01	8.66	9.61	6.77	4.76	4.09	5.35	1 1/4″
			mm	96	178	220	244	172	121	104	136	

* North American devices supplied with NPT Hub.

WATERTIGHT INLET (IP67)
(Surface Mount, Angled 80°)

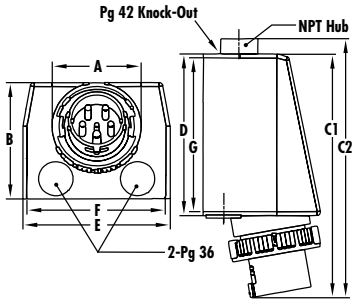

Amps N.A.	Amps Intl.	Type		Dimensions A	B	C[1]	C[2]	D	E	F	G	Hub Size*
60	63	3 Wire	inch	4.33	4.65	9.13	10.1	5.98	4.65	4.17	4.72	1 1/4″
			mm	110	118	232	256	152	118	106	120	
60	63	4 Wire	inch	4.33	4.65	9.13	10.1	5.98	4.65	4.17	4.72	1 1/4″
			mm	110	118	232	256	152	118	106	120	
60	63	5 Wire	inch	4.33	4.65	9.13	10.1	5.98	4.65	4.17	4.72	1 1/4″
			mm	110	118	232	256	152	118	106	120	
100	125	3 Wire	inch	5.12	6.89	15.4	16.3	10.4	8.66	7.87	9.45	2″
			mm	130	175	390	414	263	220	200	240	
100	125	4 Wire	inch	5.12	6.89	15.4	16.3	10.4	8.66	7.87	9.45	2″
			mm	130	175	390	414	263	220	200	240	
100	125	5 Wire	inch	5.12	6.89	15.4	16.3	10.4	8.66	7.87	9.45	2″
			mm	130	175	390	414	263	220	200	240	

* North American devices supplied with NPT Hub.
Note: Two (2) PG36 knock-outs are on the bottom of the 100/125 amp device only.

SPLASHPROOF INLET (IP44)
(Surface Mount, Angled 80°)

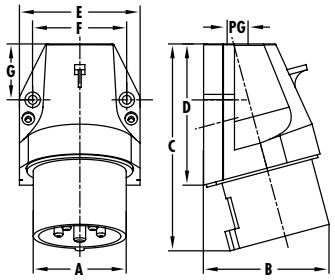

Amps N.A.	Amps Intl.	Type		Dimensions A	B	C	D	E	F	G	PG
	16	3 Wire	inch	1.71	2.36	4.33	2.91	2.36	1.79	1.10	
			mm	43.5	60	110	74	60	45.5	28	13.5
	16	4 Wire	inch	1.97	2.87	4.61	3.15	2.91	2.36	1.22	
			mm	50	73	117	80	74	60	31	16
	16	5 & 7 Wire	inch	2.20	2.87	4.61	3.15	2.91	2.36	1.22	
			mm	56	73	117	80	74	60	31	16
	32	3 Wire	inch	2.24	3.15	5.55	3.82	3.23	2.36	1.77	
			mm	57	80	141	97	82	60	45	21
	32	4 Wire	inch	2.24	3.15	5.55	3.82	3.23	2.36	1.77	
			mm	57	80	141	97	82	60	45	21
	32	5 & 7 Wire	inch	2.52	3.39	5.55	3.82	3.23	2.36	1.77	
			mm	64	86	141	97	82	60	45	21

SPLASHPROOF RECEPTACLE (IP44)
(Surface Mount, Angled 80°)

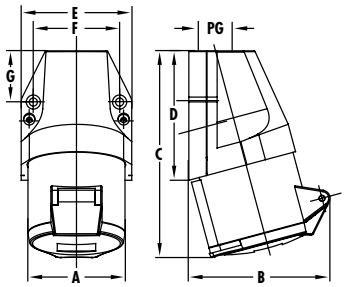

Amps N.A.	Amps Intl.	Type		Dimensions A	B	C	D	E	F	G	PG
	16	3 Wire	inch	2.68	2.95	4.72	2.91	2.36	1.79	1.10	
			mm	68	75	120	74	60	45.5	28	13.5
	16	4 Wire	inch	3.35	3.39	5.04	3.15	2.91	2.36	1.22	
			mm	85	86	128	80	74	60	31	16
	16	5 & 7 Wire	inch	3.35	3.54	5.08	3.15	2.91	2.36	1.22	
			mm	85	90	129	80	74	60	31	16
	32	3 Wire	inch	3.58	4.06	6.06	3.82	3.23	2.36	1.77	
			mm	91	103	154	97	82	60	45	21
	32	4 Wire	inch	3.58	4.06	6.06	3.82	3.23	2.36	1.77	
			mm	91	103	154	97	82	60	45	21
	32	5 & 7 Wire	inch	3.86	4.13	6.10	3.82	3.23	2.36	1.77	
			mm	98	105	155	97	82	60	45	21

SPLASHPROOF PLUG (IP44)
(Angled)

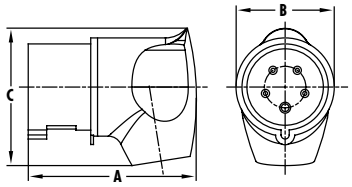

Amps N.A.	Amps Intl.	Type		Dimensions A	Dimensions B	Dimensions C	Cord Grip Range
20	16	3 Wire	inch	3.31	1.98	2.66	0.315 - 0.590
			mm	84	50.3	67.5	8.0 - 15.0
20	16	4 Wire	inch	3.98	2.53	3.32	0.395 - 0.650
			mm	101	64.3	84.2	10.0 - 16.5
20	16	5 Wire	inch	3.98	2.53	3.39	0.395 - 0.650
			mm	101	64.3	86	10.0 - 16.5
30	32	3 Wire	inch	4.53	2.83	3.76	0.435 - 0.865
			mm	115	72	95.5	11.0 - 22.0
30	32	4 Wire	inch	4.53	2.83	3.76	0.435 - 0.865
			mm	115	72	95.5	110. - 22.0
30	32	5 Wire	inch	4.53	2.83	3.96	0.435 - 0.865
			mm	115	72	100.5	11.0 - 22.0

SPLASHPROOF CONNECTOR (IP44)
(Angled)

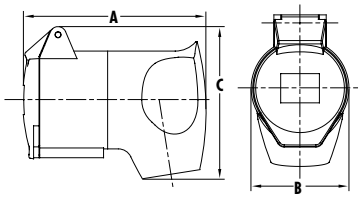

Amps N.A.	Amps Intl.	Type		Dimensions A	Dimensions B	Dimensions C	Cord Grip Range
20	16	3 Wire	inch	3.74	1.98	3.15	0.315 - 0.510
			mm	95	50.3	80	8.0 - 13.0

NEW!

SCREW-LESS PLUGS AND CONNECTORS...
...BROUGHT TO YOU BY WALTHER ELECTRIC

CEEtyp™

CEEtyp plugs and connectors, with insulation displacement technology, are designed to increase productivity and lower the installed cost of wire termination. Utilization of the quick connection system for all wiring jobs, large and small, will speed and improve wire terminations while saving you money. Time and labor savings can be up to 60% when compared to other connection systems.

No wire stripping – the installation is fast and easy. The usual stripping procedure is not required. Simply cut the wires to length, fold over and position the conductors in the piercing pockets, and the connection is complete.

The Walther quick connection system provides an optimum electrical bond between the conductor and the piercing metal. Once the threaded grip ring is fastened onto the strain relief, the proper amount of force has been applied providing a uniform and controlled connection.

The insulation displacement connections are designed for wire sizes 18 – 14 AWG (1 – 2.5 mm^2) and are suitable for use under extreme conditions such as heavy vibration.

ORDERING INFORMATION

Amps	No. of Wires	Voltage AC	Clock Position of Ground Contact	Male Plug	Female Connector
16	3P + N + G	400	6	210SL	310SL

Consult customer service for other amperage and voltage ratings and configurations.

Trim cable cleanly – do not remove cable jacket at this time.

Cut the tapered cable sleeve to fit snug around the cable diameter. Be careful not to cut more than necessary. Remove the backshell by depressing the locking tab that secures the contact carrier to the backshell with a small screwdriver. Slide the backshell and the threaded grip ring up the cable. Strip the outer cable jacket about 2 inches (50mm).

Slide the cable through the strain relief (do not strip the insulation on the individual conductors), fold over and position the conductors in the piercing pockets that are marked L1, L2, L3, N, and Ground. Trim excess conductors to fit flush.

Align the positioning key on the strain relief with the keyway on the contact carrier and set the strain relief into the back of the contact carrier.

Screw the threaded grip ring onto the strain relief. Firm tightening by had is sufficient. This procedure presses the conductors between the piercing metal providing an optimum electrical bond while firmly gripping the outer jacket of the cable.

Slide the backshell down the cable and secure it to the contact carrier by turning the backshell and snapping the locking tab in place.

POWER plus CONTROL = CEPro

Walther's advanced series of CEEpro connectors combine both power and control, monitoring and sensing contacts in one plug and socket system.

SAFETY

Designed to combine a disconnect switch and a receptacle into one compact device. Walther's mechanical interlock receptacles eliminate the possibility of making or breaking the circuit under load or making a haphazard connection. A mechanism within the enclosure prevents the switch from being turned to the "ON" position until the plug is fully engaged into the receptacle. Once inserted, the plug is locked in place when the switch is turned on and can't be removed until the switch is turned to the "OFF" position. This prevents making or breaking the circuit under load.

The integration of the switch and the receptacle in a single, compact enclosure encourages the safe operating practice of disconnecting at the switch rather than the plug and receptacle.

The nonmetallic enclosure, while abuse and corrosion resistant, is also non conductive, which enhances the safety of the product. The device can be connected to metallic conduit without interfering with the ground continuity. All mechanical interlock receptacles provide lockout protection for greater safety and comply with OSHA Lockout/Tagout requirements.

RELIABILITY

These horsepower rated devices are available in both splashproof and watertight versions.

NEMA 4X Watertight (IP67) devices are designed for the most demanding environments and provide protection against corrosion, dirt, dust, splashing water and hose-directed water.

Splashproof (IP44) devices provide many of the heavy-duty construction features found in the watertight devices, but at a more economical cost. These units are suitable and recommended for use in a variety of light industrial environments and provide protection against damaging deposits of dirt and dust, rain and splashing water.

Watertight and splashproof devices provide exceptional UV stability for superior outdoor performance.

WORLDWIDE INTERCHANGEABILITY

Walther's mechanical interlock receptacles are built to IEC 309-1 and 309-2 specifications and are completely compatible with not only Walther IEC 309-2 plugs, but with any manufacturer's plugs that conform to these IEC standards and color coding system…anywhere in the world.

Walther Mechanical Interlocks, with built-in circuit breakers, incorporate an interlocking receptacle with MCB Type "C" circuit breakers in a non-metallic enclosure that meets Type 4X (Washdown, Corrosion Resistant) requirements.

This new design combines the circuit breakers, switch and receptacle in a single enclosure. The Type "C" circuit breakers are mounted on DIN rail directly above the switch.

Walther CIRCUIT-BREAKER Mechanical Interlocks

The new CIRCUIT-BREAKER Mechanical Interlock integrates a circuit breaker (which takes the place of a switch) and receptacle in a nonmetallic enclosure that meets Type 4X (Washdown, Corrosion Resistant) requirements.

- Switched, Circuit Breaker Interlock Receptacles are available in 20, 30, 60 and 100 Amp (North American Ratings) and 16, 32, 63 and 125 Amp (International Ratings).
- UL489 Listed 22KAIC protection.

Compliance with OSHA Lockout Requirements

Walther's Mechanical Interlock's bright red handle can be locked in the "OFF" position as a method of compliance with OSHA lockout requirements. The handle can accept up to a 5/16" padlock shaft.

Compact Size

All versions and sizes are designed to fit within the web of an 8" column. This compact size allows the use of columns as a mounting location.

Easy Identification

Catalog number, rating and certifications are indicated on the label for easy identification of mating devices.

Watertight NEMA 4X, 12K Enclosure

Walther's Mechanical Interlocks are gasketed and rated as a Watertight NEMA 4X, 12K enclosure. The nonmetallic enclosure, while abuse and corrosion resistant, is also non-conductive which enhances the safety of the product.

Color Coded Receptacle Covers

Receptacle covers are color-coded by voltage in accordance with IEC 309 standard.

A Pre-Molded Offset Dimple

A pre-molded offset dimple (drill point) is provided instead of a conduit entry hole. This allows the installer to choose the size of the conduit to be used, and the location where the conduit will be attached to the enclosure (top, bottom or side entry) without the use of knockout plugs and reducers. Arranging the conduit entry hole at the dimple location will prevent condensation from falling directly on the interior electrical components, such as the switch. It will also allow for more room to pull conductors when wiring.

Completely Compatible

Completely compatible with not only Walther IEC 309-1 and 309-2 plugs, but with any manufacturer's plugs that conform to the IEC 309 standards and color coding system...anywhere in the world.

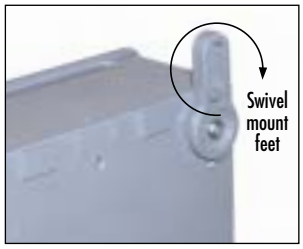

Swivel Mount Feet (135°)

Swivel mount feet can be used for installations where irregular or tight fit applications exist.

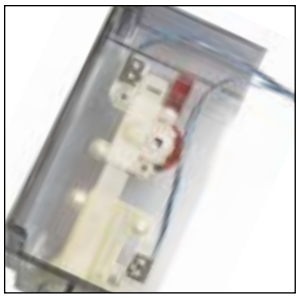

Micro Switch

Available upon request. May be used to transmit signal when plug is inserted or when switch is turned to the "ON" position. May also be used for indicator light to display and confirm when switch is turned "ON" or "OFF". Consult technical service for price and delivery.

20, 30, 60 Amp
NEMA 4X Watertight (IP67)
Drawing A
(See Drawing on Page 49)

20, 30, 60 Amp
Splashproof (IP44)
Drawing A
(See Drawing on Page 49)

Amps	Poles and Wires	Voltage AC	Clock Position of Ground Contact	Horsepower Ratings	NEMA 4X Watertight (IP67)	Splashproof (IP44)
20	2P3W	120	4	2	AE119316	AE110316
		240	6	5	AE119318	AE110318
		480	7	10	AE119319	AE110319
	3P4W	120/240	12	2 @ 120V 5 @ 240V	AE119424	AE110424
		3Ø240	9	10	AE119421	AE110421
		3Ø480	7	20	AE119419	AE110419
		3Ø600	5	25	AE119417	AE110417
	4P5W	3ØY120/208	9	10	AE119521	AE110521
		3ØY277/480	7	20	AE119519	AE110519
		3ØY347/600	5	25	AE119517	AE110517
30	2P3W	120	4	2	AE139316	AE130316
		240	6	5	AE139318	AE130318
		480	7	10	AE139319	AE130319
	3P4W	120/240	12	2 @ 120 5 @ 240	AE139424	AE130424
		3Ø240	9	10	AE139421	AE130421
		3Ø480	7	20	AE139419	AE130419
		3Ø600	5	25	AE139417	AE130417
	4P5W	3ØY120/208	9	10	AE139521	AE130521
		3ØY277/480	7	20	AE139519	AE130519
		3ØY347/600	5	25	AE139517	AE130517
32*	3P4W	380 50Hz 440 60Hz	3	15	AE139415	
60	2P3W	120	4	3	AE169316	AE160316
		240	6	7.5	AE169318	AE160318
		480	7	15	AE169319	AE160319
	3P4W	120/240	12	3 @ 120 7.5 @ 240	AE169424	AE160424
		3Ø240	9	15	AE169421	AE160421
		3Ø480	7	25	AE169419	AE160419
		3Ø600	5	30	AE169417	AE160417
	4P5W	3ØY120/208	9	15	AE169521	AE160521
		3ØY277/480	7	25	AE169519	AE160419
		3ØY347/600	5	30	AE169517	AE160517

* 32 Amp. Only for Refrigerated Containers.

100 Amp
NEMA 4X Watertight (IP67)
Drawing B
(See Drawing on Page 49)

100	2P3W	120	4	3	A0189316	
		240	6	7.5	A0189318	
		480	7	15	A0189319	
	3P4W	120/240	12	3 @ 120 7.5 @ 240	A0189424	
		3Ø240	9	15	A0189421	
		3Ø480	7	25	A0189419	
		3Ø600	5	30	A0189417	
	4P5W	3ØY120/208	9	15	A0189521	
		3ØY277/480	7	25	A0189519	
		3ØY347/600	5	30	A0189517	

20, 30, 60 Amp
NEMA 4X Watertight (IP67)
Drawing C

20, 30, 60 Amp
Splashproof (IP44)
Drawing C

Amps	Poles and Wires	MCB	Voltage AC	Clock Position of Ground Contact	Horsepower Ratings	NEMA 4X Watertight (IP67)	Splashproof (IP44)
20	2P3W	1 Pole "C"	120	4	2	AL119316UD	AL110316UD
			240	6	5	AL119318UD	AL110318UD
			480	7	10	AL119319UD	AL110319UD
	3P4W	3 Pole "C"	120/240	12	2 @ 120V 5 @ 240V	AL119424SA	AL110424SA
			3Ø240	9	10	AL119421SA	AL110421SA
			3Ø480	7	20	AL119419SA	AL110419SA
			3Ø600	5	25	AL119417SA	AL110417SA
	4P5W	3 Pole "C"	3ØY120/208	9	10	AL119521TA	AL110521TA
			3ØY277/480	7	20	AL119519TA	AL110519TA
			3ØY347/600	5	25	AL119517TA	AL110517TA
30	2P3W	1 Pole "C"	120	4	2	AL139316UD	AL130316UD
			240	6	5	AL139318UD	AL130318UD
			480	7	10	AL139319UD	AL130319UD
	3P4W	3 Pole "C"	120/240	12	2 @ 120 5 @ 240	AL139424SA	AL130424SA
			3Ø240	9	10	AL139421SA	AL130421SA
			3Ø480	7	20	AL139419SA	AL130419SA
			3Ø600	5	25	AL139417SA	AL130417SA
	4P5W	3 Pole "C"	3ØY120/208	9	10	AL139521TA	AL130521TA
			3ØY277/480	7	20	AL139519TA	AL130519TA
			3ØY347/600	5	25	AL139517TA	AL130517TA
32*	3P4W	3 Pole "C"	380 50Hz 440 60Hz	3	15	AL139415SA	
60	2P3W	1 Pole "C"	120	4	3	AL169316UD	AL160316UD
			240	6	7.5	AL169318UD	AL160318UD
			480	7	15	AL169319UD	AL160319UD
	3P4W	3 Pole "C"	120/240	12	3 @ 120 7.5 @ 240	AL169424SA	AL160424SA
			3Ø240	9	15	AL169421SA	AL160421SA
			3Ø480	7	25	AL169419SA	AL160419SA
			3Ø600	5	30	AL169417SA	AL160417SA
	4P5W	3 Pole "C"	3ØY120/208	9	15	AL169521TA	AL160521TA
			3ØY277/480	7	25	AL169519TA	AL160419TA
			3ØY347/600	5	30	AL169517TA	AL160517TA

* 32 Amp. Only for Refrigerated Containers.

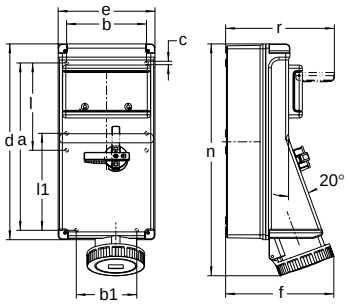

Drawing C

Dimensions

Amps N.A.	Amps Int'l	Poles and Wires	Unit of Measure	a	b	b1	c	d	e	IP44 f	NEMA 4X IP67 f	l	l1	IP44 n	NEMA 4X IP67 n	r
20	16	2P3W	inch	12.44	5.94	4.49	0.26	14.57	7.20	7.17	7.60	6.50	7.20	15.79	15.91	8.11
			mm	316	151	114	6.5	370	183	182	193	165	183	401	404	206
20	16	3P4W	inch	12.44	5.94	4.49	0.26	14.57	7.20	7.36	7.64	6.50	7.20	15.91	15.94	8.11
			mm	316	151	114	6.5	370	183	187	194	165	183	404	405	206
20	16	4P5W	inch	12.44	5.94	4.49	0.26	14.57	7.20	7.24	7.72	6.50	7.20	15.94	16.14	8.11
			mm	316	151	114	6.5	370	183	184	196	165	183	405	410	206
30	32	2P3W	inch	12.44	5.94	4.49	0.26	14.57	7.20	7.36	7.91	6.50	7.20	16.34	16.46	8.11
			mm	316	151	114	6.5	370	183	187	201	165	183	415	418	206
30	32	3P4W	inch	12.44	5.94	4.49	0.26	14.57	7.20	7.36	7.91	6.50	7.20	16.34	16.46	8.11
			mm	316	151	114	6.5	370	183	187	201	165	183	415	418	206
30	32	4P5W	inch	12.44	5.94	4.49	0.26	14.57	7.20	7.44	7.91	6.50	7.20	16.42	16.46	8.11
			mm	316	151	114	6.5	370	183	189	201	165	183	417	418	206
60	63	2P3W	inch	12.44	5.94	4.49	0.26	14.57	7.20	7.72	8.23	6.50	7.20	17.01	17.44	8.11
			mm	316	151	114	6.5	370	183	196	209	165	183	432	443	206
60	63	3P4W	inch	12.44	5.94	4.49	0.26	14.57	7.20	7.72	8.23	6.50	7.20	17.01	17.44	8.11
			mm	316	151	114	6.5	370	183	196	209	165	183	432	443	206
60	63	4P5W	inch	12.44	5.94	4.49	0.26	14.57	7.20	7.72	8.23	6.50	7.20	17.01	17.44	8.11
			mm	316	151	114	6.5	370	183	196	209	165	183	432	443	206

20, 30 Amp
NEMA 4X Watertight (IP67)
Drawing D

20, 30 Amp
Splashproof (IP44)
Drawing D

Amps	Poles and Wires	Voltage AC	Clock Position of Ground Contact	Horsepower Ratings	NEMA 4X Watertight (IP67)	Splashproof (IP44)
20	2P3W	120	4	2	AT119316	AT110316
		240	6	5	AT119318	AT110318
		480	7	10	AT119319	AT110319
	3P4W	120/240	12	2 @ 120V 5 @ 240V	AT119424	AT110424
		3Ø240	9	10	AT119421	AT110421
		3Ø480	7	20	AT119419	AT110419
		3Ø600	5	25	AT119417	AT110417
	4P5W	3ØY120/208	9	10	AT119521	AT110521
		3ØY277/480	7	20	AT119519	AT110519
		3ØY347/600	5	25	AT119517	AT110517
30	2P3W	120	4	2	AT139316	AT130316
		240	6	5	AT139318	AT130318
		480	7	10	AT139319	AT130319
	3P4W	120/240	12	2 @ 120 5 @ 240	AT139424	AT130424
		3Ø240	9	10	AT139421	AT130421
		3Ø480	7	20	AT139419	AT130419
		3Ø600	5	25	AT139417	AT130417
	4P5W	3ØY120/208	9	10	AT139521	AT130521
		3ØY277/480	7	20	AT139519	AT130519
		3ØY347/600	5	25	AT139517	AT130517
32*	3P4W	380 50Hz 440 60Hz	3	15	AT139415	

* 32 Amp. Only for Refrigerated Containers.

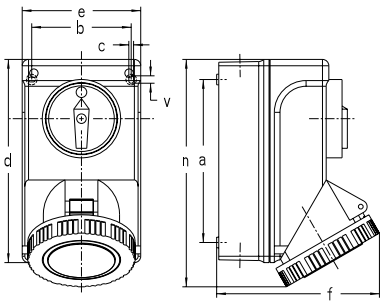

Drawing D

Dimensions

Amps N.A.	Amps Int'l	Poles and Wires	Unit of Measure	a	b	c	d	e	IP44 f	NEMA 4X IP67 f	IP44 n	NEMA 4X IP67 n	v
20	16	2P3W	inch	5.00	3.07	0.18	6.54	3.82	4.57	4.72	7.28	7.28	0.28
			mm	127	78	4.5	166	97	116	120	185	185	7
20	16	3P4W	inch	5.00	3.07	0.18	6.54	3.82	4.72	4.92	7.28	7.28	0.28
			mm	127	78	4.5	166	97	120	125	185	185	7
20	16	4P5W	inch	5.00	3.07	0.18	6.54	3.82	4.92	5.20	7.28	7.28	0.28
			Mm	127	78	4.5	166	97	125	132	185	185	7
30	32	2P3W	inch	6.06	3.70	0.18	7.60	4.45	5.71	6.06	8.46	8.46	0.28
			mm	154	94	4.5	193	113	145	154	215	215	7
30	32	3P4W	inch	6.06	3.70	0.18	7.60	4.45	5.71	6.06	8.46	8.46	0.28
			mm	154	94	4.5	193	113	145	154	215	215	7
30	32	4P5W	inch	6.06	3.70	0.18	7.60	4.45	5.83	6.06	8.46	8.46	0.28
			mm	154	94	4.5	193	113	148	154	215	215	7

20, 30 Amp
NEMA 4X Watertight (IP67)
Drawing E

20, 30 Amp
Splashproof (IP44)
Drawing E

Amps	Poles and Wires	MCB	Voltage AC	Clock Position of Ground Contact	Horsepower Ratings	NEMA 4X Watertight (IP67)	Splashproof (IP44)
20	2P3W	1 Pole "C"	120	4	2	AU119316UD	AU110316UD
			240	6	5	AU119318UD	AU110318UD
			480	7	10	AU119319UD	AU110319UD
	3P4W	3 Pole "C"	120/240	12	2 @ 120V 5 @ 240V	AU119424SA	AU110424SA
			3Ø240	9	10	AU119421SA	AU110421SA
			3Ø480	7	20	AU119419SA	AU810419SA
			3Ø600	5	25	AU119417SA	AU110417SA
	4P5W	3 Pole "C"	3ØY120/208	9	10	AU119521TA	AU110521TA
			3ØY277/480	7	20	AU119519TA	AU110519TA
			3ØY347/600	5	25	AU119517TA	AU110517TA
30	2P3W	1 Pole "C"	120	4	2	AU139316UD	AU130316UD
			240	6	5	AU139318UD	AU130318UD
			480	7	10	AU139319UD	AU130319UD
	3P4W	3 Pole "C"	120/240	12	2 @ 120 5 @ 240	AU139424SA	AU130424SA
			3Ø240	9	10	AU139421SA	AU130421SA
			3Ø480	7	20	AU139419SA	AU130419SA
			3Ø600	5	25	AU139417SA	AU130417SA
	4P5W	3 Pole "C"	3ØY120/208	9	10	AU139521TA	AU130521TA
			3ØY277/480	7	20	AU139519TA	AU130519TA
			3ØY347/600	5	25	AU139517TA	AU130517TA
32*	3P4W	3 Pole "C"	380 50Hz 440 60Hz	3	15	AU139415SA	

* 32 Amp. Only for Refrigerated Containers.

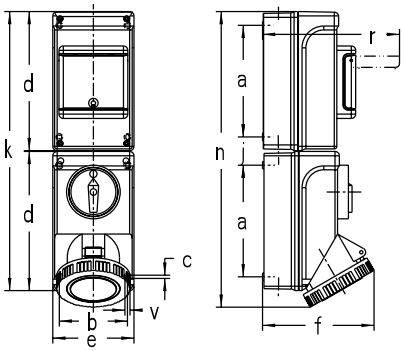

Drawing E

Dimensions

Amps N.A.	Amps Int'l	Poles and Wires	Unit of Measure	a	b	c	d	e	IP44 f	NEMA 4X IP67 f	j	k	IP44 n	NEMA 4X IP67 n	r	v
20	16	2P3W	inch	5.00	3.07	0.18	6.54	3.82	4.57	4.72	1.54	13.11	13.86	13.86	6.97	0.28
			mm	127	78	4.5	166	97	116	120	39	333	352	352	177	7
20	16	3P4W	inch	5.00	3.07	0.18	6.54	3.82	4.72	4.92	1.54	13.11	13.86	13.86	6.97	0.28
			mm	127	78	4.5	166	97	120	125	39	333	352	352	177	7
20	16	4P5W	inch	5.00	3.07	0.18	6.54	3.82	4.92	5.20	1.54	13.11	13.86	13.86	6.97	0.28
			mm	127	78	4.5	166	97	125	132	39	333	352	352	177	7
30	32	2P3W	inch	6.06	3.70	0.18	7.60	4.45	5.71	6.06	1.54	15.24	16.10	16.10	7.52	0.28
			mm	154	94	4.5	193	113	145	154	39	387	409	409	191	7
30	32	3P4W	inch	6.06	3.70	0.18	7.60	4.45	5.71	6.06	1.54	15.24	16.10	16.10	7.52	0.28
			mm	154	94	4.5	193	113	145	154	39	387	409	409	191	7
30	32	4P5W	inch	6.06	3.70	0.18	7.60	4.45	5.83	6.06	1.54	15.24	16.10	16.10	7.52	0.28
			mm	154	94	4.5	193	113	148	154	39	387	409	409	191	7

20, 30, 60, 100 Amp
NEMA 4X Watertight (IP67)
Drawing B
(See Drawing on Page 49)

20, 30, 60, 100 Amp
Splashproof (IP44)
Drawing B
(See Drawing on Page 49)

Amps	Poles and Wires	Voltage AC	Clock Position of Ground Contact	NEMA 4X Watertight (IP67)	Splashproof (IP44)
20	2P3W	120	4	AJ119316SH	AJ110316SH
		240	6	AJ119318SH	AJ110318SH
		480	7	AJ119319SH	AJ110319SH
	3P4W	120/240	12	AJ119424SH	AJ110424SH
		3Ø240	9	AJ119421SH	AJ110421SH
		3Ø480	7	AJ119419SH	AJ110419SH
	4P5W	3ØY120/208	9	AJ119521SH	AJ110521SH
		3ØY277/480	7	AJ119519SH	AJ110519SH
30	2P3W	120	4	AJ139316SH	AJ130316SH
		240	6	AJ139318SH	AJ130318SH
		480	7	AJ139319SH	AJ130319SH
	3P4W	120/240	12	AJ139424SH	AJ130424SH
		3Ø240	9	AJ139421SH	AJ130421SH
		3Ø480	7	AJ139419SH	AJ130419SH
	4P5W	3ØY120/208	9	AJ139521SH	AJ130521SH
		3ØY277/480	7	AJ139519SH	AJ130519SH
32*	3P4W	380 50Hz 440 60Hz	3	AJ139415SH	
60	2P3W	120	4	AJ169316SH	AJ160316SH
		240	6	AJ169318SH	AJ160318SH
		480	7	AJ169319SH	AJ160319SH
	3P4W	120/240	12	AJ169424SH	AJ160424SH
		3Ø240	9	AJ169421SH	AJ160421SH
		3Ø480	7	AJ169419SH	AJ160419SH
	4P5W	3ØY120/208	9	AJ169521SH	AJ160521SH
		3ØY277/480	7	AJ169519SH	AJ160419SH
100	2P3W	120	4	AO189316SH	
		240	6	AO189318SH	
		480	7	AO189319SH	
	3P4W	120/240	12	AO189424SH	
		3Ø240	9	AO189421SH	
		3Ø480	7	AO189419SH	
	4P5W	3ØY120/208	9	AO189521SH	
		3ØY277/480	7	AO189519SH	

* 32 Amp. Only for Refrigerated Containers.

IEC 309
CIRCUIT BREAKER VERSION

ELECTRICAL

Dialectric Voltage Withstand	3,000 Volts
Maximum Working Voltage	600 Volts RMS (switch version) 480 Volts RMS (circuit breaker version)
Current Interrupting	Certified for current interrupting at full rated current and voltage.
Short Circuit Withstand Rating	Suitable for use on a circuit capable of delivering not more than 10,000 RMS symmetrical amperes at the voltage rating of the receptacle.
Operations	Mechanical: 10,000 cycles Electrical: 6,000 cycles

MECHANICAL

Impact Resistance	In accordance with UL 746C
Terminal Identification	In accordance with UL, CSA and international conventions.
Product Identification	Identification, ratings and color code in accordance with UL, CSA and IEC requirements.
Lockout/Tagout	"ON" and "OFF" lockout/tagout capability at switch handle. Complies with OSHA Reg. 29CFR 1910.147
Mounting	
Switch Version	Internal or external adjustable mounting feet
Compact Version	Internal mounting
Circuit Breaker Version	Internal or external adjustable mounting feet

ENVIRONMENTAL

Moisture Resistance	Watertight IP67 (Washdown) - UL Type 4X Splashproof IP44
Flammability	UL94-5VA & V0 Classifications
Operating Temperatures	Maximum Continuous: 60°C (140°F) Minimum Continuous: -40°C (-40°F)
UV Resistance	UV stabilized material
Chemicals	Resists most standard industrial hydrocarbons, acids, bases and solvents.

MATERIALS

Enclosure (all exterior components)	UL94-5VA/V0, UV stabilized, impact modified Valox®.
Contact Carrier	Molded arc resistant UL94-V0 thermoplastic
Gaskets	Neoprene or EPDM
Contacts (NEMA 4X, Watertight IP67)	Brass, Nickel Plated
Contacts (Splashproof (IP44)	Brass
Hardware (screws & springs)	Steel with zinc-plated blue chromate or nickel plating.

APPROVALS & COMPLIANCES

UL 508 (switch version) Motor Disconnect

UL 508 (compact version) Manual Motor Controller

UL 231 & UL 489 (circuit breaker version)

UL1682 & 1686

CSA C22.2 No. 14, 182.1

IEC 309-1 & IEC 309-2

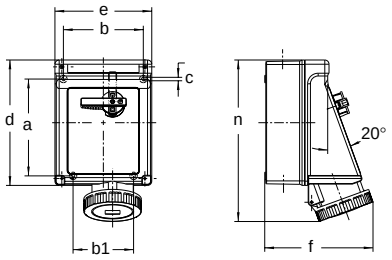

Drawing A

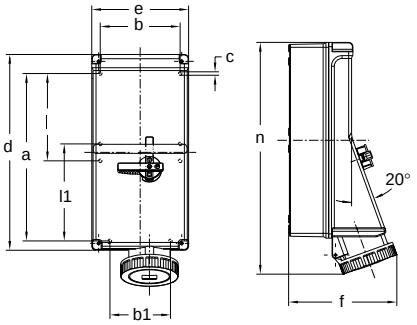

Drawing B

Drawing A

Amps N.A.	Amps Int'l	Poles and Wires	Unit of Measure	Dimensions a	b	b1	c	d	e	IP44 f	NEMA 4X IP67 f	IP44 n	NEMA 4X IP67 n
20	16	2P3W	inch	7.20	5.94	4.49	0.26	9.33	7.20	7.17	7.60	10.55	10.63
			mm	183	151	114	6.5	237	183	182	193	268	270
20	16	3P4W	inch	7.20	5.94	4.49	0.26	9.33	7.20	7.36	7.64	10.63	10.71
			mm	183	151	114	6.5	237	183	187	194	270	272
20	16	4P5W	inch	7.20	5.94	4.49	0.26	9.33	7.20	7.24	7.72	10.75	10.91
			mm	183	151	114	6.5	237	183	184	196	273	277
30	32	2P3W	inch	7.20	5.94	4.49	0.26	9.33	7.20	7.36	7.91	11.10	11.22
			mm	183	151	114	6.5	237	183	187	201	282	285
30	32	3P4W	inch	7.20	5.94	4.49	0.26	9.33	7.20	7.36	7.91	11.10	11.22
			mm	183	151	114	6.5	237	183	187	201	282	285
30	32	4P5W	inch	7.20	5.94	4.49	0.26	9.33	7.20	7.44	7.91	11.18	11.38
			mm	183	151	114	6.5	237	183	189	201	284	289
60	63	2P3W	inch	7.20	5.94	4.49	0.26	9.33	7.20	7.72	8.23	11.89	12.17
			mm	183	151	114	6.5	237	183	196	209	302	309
60	63	3P4W	inch	7.20	5.94	4.49	0.26	9.33	7.20	7.72	8.23	11.89	12.17
			mm	183	151	114	6.5	237	183	196	209	302	309
60	63	4P5W	inch	7.20	5.94	4.49	0.26	9.33	7.20	7.72	8.23	11.89	12.17
			mm	183	151	114	6.5	237	183	196	209	302	309

Drawing B

Amps N.A.	Amps Int'l	Poles and Wires	Unit of Measure	Dimensions a	b	b1	c	d	e	NEMA 4X IP67 f	NEMA 4X IP67 n
100	125	2P3W	inch	12.44	5.94	4.96	0.26	14.57	7.20	9.57	17.72
			mm	316	151	126	6.5	370	183	243	450
100	125	3P4W	inch	12.44	5.94	4.96	0.26	14.57	7.20	9.57	17.72
			mm	316	151	126	6.5	370	183	243	450
100	125	4P5W	inch	12.44	5.94	4.96	0.26	14.57	7.20	9.57	17.72
			mm	316	151	126	6.5	370	183	243	450

16, 32, 63 Amp
Watertight (IP67)
Drawing A
(See Drawing on Page 49)

16, 32, 63 Amp
Splashproof (IP44)
Drawing A
(See Drawing on Page 49)

Amps	Poles and Wires	Voltage AC	Clock Position of Ground Contact	NEMA 4X Watertight (IP67)	Splashproof (IP44)
16	2P3W	110	4	AE119304	AE110304
		230	9	AE119309	AE110309
		400	6	AE119306	AE110306
	3P4W	110	4	AE119404	AE110404
		230	9	AE119409	AE110409
		400	6	AE119406	AE110406
		500	7	AE119407	AE110407
	4P5W	110	4	AE119504	AE110504
		230	9	AE119509	AE110509
		400	6	AE119	AE110
32	2P3W	110	4	AE139304	AE130304
		230	9	AE139309	AE130309
		400	6	AE139306	AE130306
	3P4W	110	4	AE139404	AE130404
		230	9	AE139409	AE130409
		400	6	AE139406	AE130406
		500	7	AE139407	AE130407
	4P5W	110	4	AE139504	AE130504
		230	9	AE139509	AE130509
		400	6	AE139	AE130
32*	3P4W	380 50Hz 440 60Hz	3	AE139403	
63	2P3W	110	4	AE169304	AE160304
		230	9	AE169309	AE160309
		400	6	AE169306	AE160306
	3P4W	110	4	AE169404	AE160404
		230	9	AE169409	AE160409
		400	6	AE169406	AE160406
		500	7	AE169407	AE160407
	4P5W	110	4	AE169504	AE160504
		230	9	AE169509	AE160509
		400	6	AE169	AE160

* 32 Amp. Only for Refrigerated Containers.

125 Amp
Watertight (IP67)
Drawing B
(See Drawing on Page 49)

125	2P3W	110	4	A0179304	
		230	9	A0179309	
		400	6	A0179306	
	3P4W	110	4	A0179404	
		230	9	A0179409	
		400	6	A0179406	
		500	7	A0179407	
	4P5W	110	4	A0179504	
		230	9	A0179509	
		400	6	A0179	

16, 32, 63 Amp
Watertight (IP67)
Drawing C

16, 32, 63 Amp
Splashproof (IP44)
Drawing C

Amps	Poles and Wires	MCB	Voltage AC	Clock Position of Ground Contact	NEMA 4X Watertight (IP67)	Splashproof (IP44)
16	2P3W	1 Pole "C"	110	4	AL119304UD	AL110304UD
			230	9	AL119309UD	AL110309UD
			400	6	AL119306UD	AL110306UD
	3P4W	3 Pole "C"	110	4	AL119404SA	AL110404SA
			230	9	AL119409SA	AL110409SA
			400	6	AL119406SA	AL110406SA
			500	7	AL119407SA	AL110407SA
	4P5W	3 Pole "C"	110	4	AL119504TA	AL110504TA
			230	9	AL119509TA	AL110509TA
			400	6	AL119TA	AL110TA
32	2P3W	1 Pole "C"	110	4	AL139304UD	AL130304UD
			230	9	AL139309UD	AL130309UD
			400	6	AL139306UD	AL130306UD
	3P4W	3 Pole "C"	110	4	AL139404SA	AL130404SA
			230	9	AL139409SA	AL130409SA
			400	6	AL139406SA	AL130406SA
			500	7	AL139407SA	AL130407SA
	4P5W	3 Pole "C"	110	4	AL139504TA	AL130504TA
			230	9	AL139509TA	AL130509TA
			400	6	AL139TA	AL130TA
32*	3P4W	3 Pole "C"	380 50Hz 440 60Hz	3	AL139403SA	
63	2P3W	1 Pole "C"	110	4	AL169304UD	AL160304UD
			230	9	AL169309UD	AL160309UD
			400	6	AL169306UD	AL160306UD
	3P4W	3 Pole "C"	110	4	AL169404SA	AL160404SA
			230	9	AL169409SA	AL160409SA
			400	6	AL169406SA	AL160406SA
			500	7	AL169407SA	AL160407SA
	4P5W	3 Pole "C"	110	4	AL169504TA	AL160504TA
			230	9	AL169509TA	AL160509TA
			400	6	AL169TA	AL160TA

* 32 Amp. Only for Refrigerated Containers.

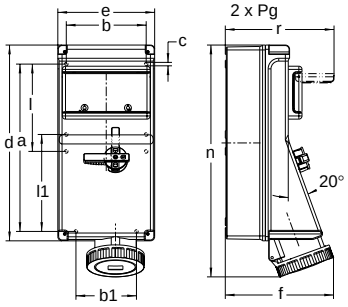

Drawing C

Dimensions

Amps N.A.	Amps Int'l	Poles and Wires	Unit of Measure	a	b	b1	c	d	e	IP44 f	NEMA 4X IP67 f	l	l1	IP44 n	NEMA 4X IP67 n	r
20	16	2P3W	inch	12.44	5.94	4.49	0.26	14.57	7.20	7.17	7.60	6.50	7.20	15.79	15.91	8.11
			mm	316	151	114	6.5	370	183	182	193	165	183	401	404	206
20	16	3P4W	inch	12.44	5.94	4.49	0.26	14.57	7.20	7.36	7.64	6.50	7.20	15.91	15.94	8.11
			mm	316	151	114	6.5	370	183	187	194	165	183	404	405	206
20	16	4P5W	inch	12.44	5.94	4.49	0.26	14.57	7.20	7.24	7.72	6.50	7.20	15.94	16.14	8.11
			mm	316	151	114	6.5	370	183	184	196	165	183	405	410	206
30	32	2P3W	inch	12.44	5.94	4.49	0.26	14.57	7.20	7.36	7.91	6.50	7.20	16.34	16.46	8.11
			mm	316	151	114	6.5	370	183	187	201	165	183	415	418	206
30	32	3P4W	inch	12.44	5.94	4.49	0.26	14.57	7.20	7.36	7.91	6.50	7.20	16.34	16.46	8.11
			mm	316	151	114	6.5	370	183	187	201	165	183	415	418	206
30	32	4P5W	inch	12.44	5.94	4.49	0.26	14.57	7.20	7.44	7.91	6.50	7.20	16.42	16.46	8.11
			mm	316	151	114	6.5	370	183	189	201	165	183	417	418	206
60	63	2P3W	inch	12.44	5.94	4.49	0.26	14.57	7.20	7.72	8.23	6.50	7.20	17.01	17.44	8.11
			mm	316	151	114	6.5	370	183	196	209	165	183	432	443	206
60	63	3P4W	inch	12.44	5.94	4.49	0.26	14.57	7.20	7.72	8.23	6.50	7.20	17.01	17.44	8.11
			mm	316	151	114	6.5	370	183	196	209	165	183	432	443	206
60	63	4P5W	inch	12.44	5.94	4.49	0.26	14.57	7.20	7.72	8.23	6.50	7.20	17.01	17.44	8.11
			mm	316	151	114	6.5	370	183	196	209	165	183	432	443	206

16, 32 Amp
Watertight (IP67)
Drawing D

16, 32 Amp
Splashproof (IP44)
Drawing D

Amps	Poles and Wires	Voltage AC	Clock Position of Ground Contact	NEMA 4X Watertight (IP67)	Splashproof (IP44)
16	2P3W	110	4	AT119304	AT110304
		230	9	AT119309	AT110309
		400	6	AT119306	AT110306
	3P4W	110	4	AT119404	AT110404
		230	9	AT119409	AT110409
		400	6	AT119406	AT110406
		500	7	AT119407	AT110407
	4P5W	110	4	AT119504	AT110504
		230	9	AT119509	AT110509
		400	6	AT119	AT110
32	2P3W	110	4	AT139304	AT130304
		230	9	AT139309	AT130309
		400	6	AT139306	AT130306
	3P4W	110	4	AT139404	AT130404
		230	9	AT139409	AT130409
		400	6	AT139406	AT130406
		500	7	AT139407	AT130407
	4P5W	110	4	AT139504	AT130504
		230	9	AT139509	AT130509
		400	6	AT139	AT130
32*	3P4W	380 50Hz 440 60Hz	3	AT139403	

* 32 Amp. Only for Refrigerated Containers.

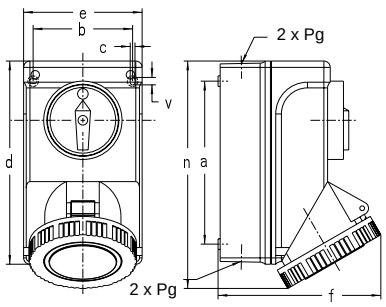

Drawing D

Dimensions

Amps N.A.	Amps Int'l	Poles and Wires	Unit of Measure	a	b	c	d	e	IP44 f	NEMA 4X IP67 f	IP44 n	NEMA 4X IP67 n	v
20	16	2P3W	inch	5.00	3.07	0.18	6.54	3.82	4.57	4.72	7.28	7.28	0.28
			mm	127	78	4.5	166	97	116	120	185	185	7
20	16	3P4W	inch	5.00	3.07	0.18	6.54	3.82	4.72	4.92	7.28	7.28	0.28
			mm	127	78	4.5	166	97	120	125	185	185	7
20	16	4P5W	inch	5.00	3.07	0.18	6.54	3.82	4.92	5.20	7.28	7.28	0.28
			mm	127	78	4.5	166	97	125	132	185	185	7
30	32	2P3W	inch	6.06	3.70	0.18	7.60	4.45	5.71	6.06	8.46	8.46	0.28
			mm	154	94	4.5	193	113	145	154	215	215	7
30	32	3P4W	inch	6.06	3.70	0.18	7.60	4.45	5.71	6.06	8.46	8.46	0.28
			mm	154	94	4.5	193	113	145	154	215	215	7
30	32	4P5W	inch	6.06	3.70	0.18	7.60	4.45	5.83	6.06	8.46	8.46	0.28
			mm	154	94	4.5	193	113	148	154	215	215	7

16, 32 Amp
Watertight (IP67)
Drawing E

16, 32 Amp
Splashproof (IP44)
Drawing E

Amps	Poles and Wires	MCB	Voltage AC	Clock Position of Ground Contact	NEMA 4X Watertight (IP67)	Splashproof (IP44)
16	2P3W	1 Pole "C"	110	4	AU119304UD	AU110304UD
			230	9	AU119309UD	AU110309UD
			400	6	AU119306UD	AU110306UD
	3P4W	3 Pole "C"	110	4	AU119404SA	AU110404SA
			230	9	AU119409SA	AU110409SA
			400	6	AU119406SA	AU810406SA
			500	7	AU119407SA	AU110407SA
	4P5W	3 Pole "C"	110	4	AU119504TA	AU110504TA
			230	9	AU119509TA	AU110509TA
			400	6	AU119TA	AU110TA
32	2P3W	1 Pole "C"	110	4	AU139304UD	AU130304UD
			230	9	AU139309UD	AU130309UD
			400	6	AU139306UD	AU130306UD
	3P4W	3 Pole "C"	110	4	AU139404SA	AU130404SA
			230	9	AU139409SA	AU130409SA
			400	6	AU139406SA	AU130406SA
			500	7	AU139407SA	AU130407SA
	4P5W	3 Pole "C"	110	4	AU139504TA	AU130504TA
			230	9	AU139509TA	AU130509TA
			400	6	AU139TA	AU130TA
32*	3P4W	3 Pole "C"	380 50Hz 440 60Hz	3	AU139403SA	

* 32 Amp. Only for Refrigerated Containers.

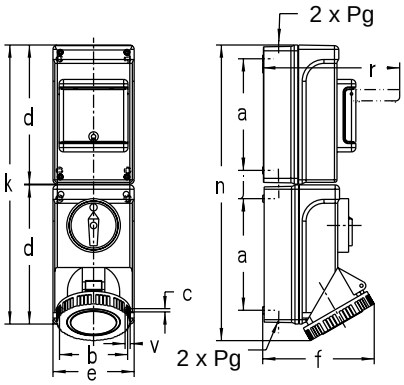

Drawing E

Dimensions

Amps N.A.	Amps Int'l	Poles and Wires	Unit of Measure	a	b	c	d	e	IP44 f	NEMA 4X IP67 f	j	k	IP44 n	NEMA 4X IP67 n	r	v
20	16	2P3W	inch	5.00	3.07	0.18	6.54	3.82	4.57	4.72	1.54	13.11	13.86	13.86	6.97	0.28
			mm	127	78	4.5	166	97	116	120	39	333	352	352	177	7
20	16	3P4W	inch	5.00	3.07	0.18	6.54	3.82	4.72	4.92	1.54	13.11	13.86	13.86	6.97	0.28
			mm	127	78	4.5	166	97	120	125	39	333	352	352	177	7
20	16	4P5W	inch	5.00	3.07	0.18	6.54	3.82	4.92	5.20	1.54	13.11	13.86	13.86	6.97	0.28
			mm	127	78	4.5	166	97	125	132	39	333	352	352	177	7
30	32	2P3W	inch	6.06	3.70	0.18	7.60	4.45	5.71	6.06	1.54	15.24	16.10	16.10	7.52	0.28
			mm	154	94	4.5	193	113	145	154	39	387	409	409	191	7
30	32	3P4W	inch	6.06	3.70	0.18	7.60	4.45	5.71	6.06	1.54	15.24	16.10	16.10	7.52	0.28
			mm	154	94	4.5	193	113	145	154	39	387	409	409	191	7
30	32	4P5W	inch	6.06	3.70	0.18	7.60	4.45	5.83	6.06	1.54	15.24	16.10	16.10	7.52	0.28
			mm	154	94	4.5	193	113	148	154	39	387	409	409	191	7

16, 32, 63, 125 Amp
Watertight (IP67)
Drawing B
(See Drawing on Page 49)

16, 32, 63, 125 Amp
Splashproof (IP44)
Drawing B
(See Drawing on Page 49)

Amps	Poles and Wires	Voltage AC	Clock Position of Ground Contact	NEMA 4X Watertight (IP67)	Splashproof (IP44)
16	2P3W	110	4	AJ119304SH	AJ110304SH
		230	9	AJ119309SH	AJ110309SH
		400	6	AJ119306SH	AJ110306SH
	3P4W	110	4	AJ119404SH	AJ110404SH
		230	9	AJ119409SH	AJ110409SH
		400	6	AJ119406SH	AJ110406SH
	4P5W	110	4	AJ119504SH	AJ110504SH
		230	9	AJ119509SH	AJ110509SH
		400	6	AJ119SH	AJ110SH
32	2P3W	110	4	AJ139304SH	AJ130304SH
		230	9	AJ139309SH	AJ130309SH
		400	6	AJ139306SH	AJ130306SH
	3P4W	110	4	AJ139404SH	AJ130404SH
		230	9	AJ139409SH	AJ130409SH
		400	6	AJ139406SH	AJ130406SH
	4P5W	110	4	AJ139504SH	AJ130504SH
		230	9	AJ139509SH	AJ130509SH
		400	6	AJ139SH	AJ130SH
32*	3P4W	380 50Hz 440 60Hz	3	AJ139403SH	
63	2P3W	110	4	AJ169304SH	AJ160304SH
		230	9	AJ169309SH	AJ160309SH
		400	6	AJ169306SH	AJ160306SH
	3P4W	110	4	AJ169404SH	AJ160404SH
		230	9	AJ169409SH	AJ160409SH
		400	6	AJ169406SH	AJ160406SH
	4P5W	110	4	AJ169504SH	AJ160504SH
		230	9	AJ169509SH	AJ160509SH
		400	6	AJ169SH	AJ160SH
125	2P3W	110	4	A0179304SH	
		230	9	A0179309SH	
		400	6	A0179306SH	
	3P4W	110	4	A0179404SH	
		230	9	A0179409SH	
		400	6	A0179406SH	
	4P5W	110	4	A0179504SH	
		230	9	A0179509SH	
		400	6	A0179SH	

* 32 Amp. Only for Refrigerated Containers.

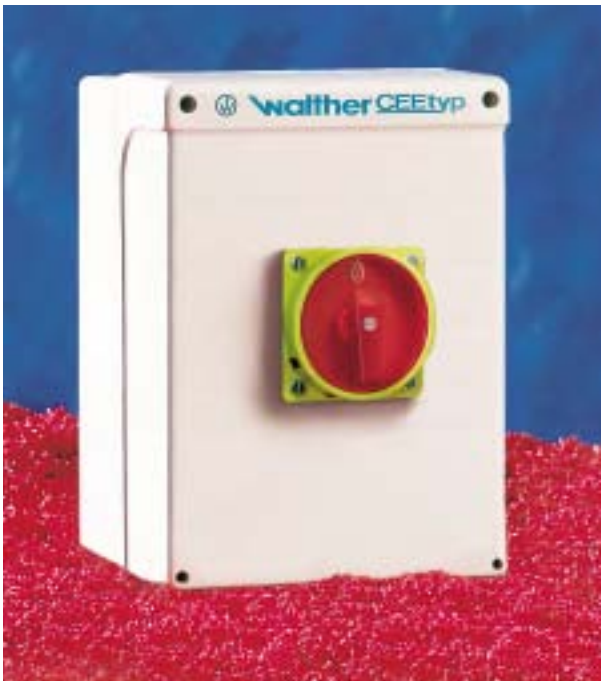

SAFETY

Walther's Manual Disconnect Switch combines a horsepower rated switch in a tough, impervious NEMA 4X or IP65 enclosure for safe motor load disconnect. The bright yellow and red padlock handle provides lockout protection, in the "OFF" position, to comply with OSHA Lockout/Tagout regulations. In addition, the enclosure cover cannot be removed from the body until the switch is turned to the "OFF" position.

The nonmetallic enclosure, while abuse and corrosion resistant, is also non conductive, which enhances the safety of the product. The device can be connected to metallic conduit without interfering with the ground continuity.

RELIABILITY

These horsepower rated devices are available from 20 to 100 amp ratings.

Type 4X and IP65 enclosures are designed for the most demanding environments and provide protection against corrosion, dirt, dust, splashing water and hose-directed water.
Walther Type 4X and IP65 enclosures provide exceptional UV stability for superior outdoor performance.

NEC ARTICLE 430

Walther's Disconnect Switch is designed to meet National Electric Code, Article 430-102, requiring a disconnecting means, located within sight, from the motor location and the driven machinery location.

APPROVALS & COMPLIANCES

UL 508 Motor Disconnect

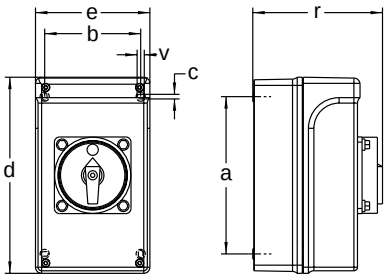

Drawing F

Amps	Walther Part No.	Auxiliary Contacts (1 N/O and 1 N/C)		Approximate Dimensions						
				A	B	C	D	E	V	R
20	NS1153	without auxiliary contacts	inch	5.00	3.07	0.18	6.54	3.82	-	4.57
			mm	127.0	78.0	4.5	166.0	97.0	7.0	116.0
30/32	NS1353	without auxiliary contacts	inch	6.06	3.70	0.18	7.60	4.45	0.28	5.12
			mm	154.0	94.0	4.5	193.0	113.0	7.0	130.0
	NS1353-GH	with auxiliary contacts	inch	6.06	3.70	0.18	7.60	4.45	0.28	5.12
			mm	154.0	94.0	4.5	193.0	113.0	7.0	130.0
60/63	NS1653	without auxiliary contacts	inch	6.50	5.94	0.26	9.33	7.20	-	7.09
			mm	165.0	151.0	6.5	237.0	183.0	-	180.0
	NS1653-GH	with auxiliary contacts	inch	6.50	5.94	0.26	9.33	7.20	-	7.09
			mm	165.0	151.0	6.5	237.0	183.0	-	180.0
80	NS1853	without auxiliary contacts	inch	6.50	5.94	0.26	9.33	7.20	-	7.09
			mm	165.0	151.0	6.5	237.0	183.0	-	180.0
	NS1853-GH	with auxiliary contacts	inch	6.50	5.94	0.26	9.33	7.20	-	7.09
			mm	165.0	151.0	6.5	237.0	183.0	-	180.0
100	NS1753	without auxiliary contacts	inch	6.50	5.94	0.26	9.33	7.20	-	7.09
			mm	165.0	151.0	6.5	237.0	183.0	-	180.0
	NS1753-GH	with auxiliary contacts	inch	6.50	5.94	0.26	9.33	7.20	-	7.09
			mm	165.0	151.0	6.5	237.0	183.0	-	180.0

For four (4) and six (6) pole switches, consult technical service for price and delivery.

Materials

Body and Cover*	Polyamid
Cover Screws	Steel with zinc-plated blue chromate or nickel plating.
Enclosure Gasket	Neoprene

*Valox® available upon request. When ordering Valox® change the first numerical digit from a 1 to a 3. For example:

Part No.	Material
NS1153	Polyamid
NS3153	Valox®

® Registered trademark of GE Company

Horsepower Ratings

Phase	Voltage AC	Horsepower Rating UL/CSA				
		20 Amp	30/32 Amp	60/63 Amp	80 Amp	100 Amp
1 Phase	120	0.5	1	2	3.5	5
	240	1.5	2.5	5	10	15
	480	2.5	5	10	20	25
3 Phase	120	1.5	2	5	7.5	10
	240	3	5	10	20	25
	480	5	10	20	40	50
	600	5	10	20	50	50

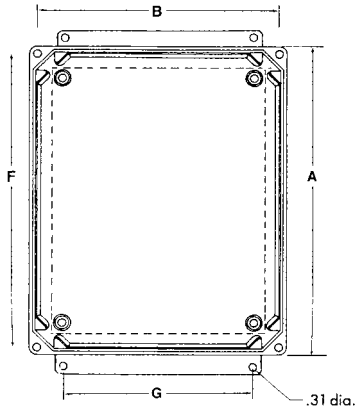

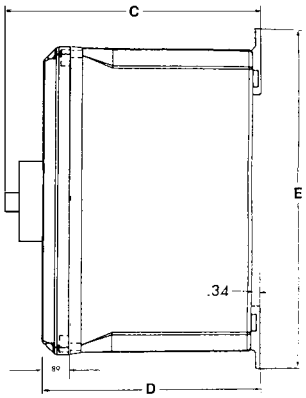

Amps	Walther Part No.	Auxiliary Contacts (2 N/O)		Approximate Dimensions						
				A	B	C	D	E	F	G
30	MDS3AC	With Auxiliary Contacts	inch	6.40	4.40	6.75	5.13	7.69	6.75	2.00
			mm	162.6	111.8	171.5	130.3	195.3	171.5	50.8
	MDS3	Without Auxiliary Contacts	inch	6.40	4.40	6.75	5.13	7.69	6.75	2.00
			mm	162.6	111.8	171.5	130.3	195.3	171.5	50.8
60	MDS6AC	With Auxiliary Contacts	inch	8.40	6.40	6.75	5.13	9.69	8.75	4.00
			mm	213.4	162.6	171.5	130.3	246.1	222.3	101.6
	MDS6	Without Auxiliary Contacts	inch	8.40	6.40	6.75	5.13	9.69	8.75	4.00
			mm	213.4	162.6	171.5	130.3	246.1	222.3	101.6
100	MDS10AC	With Auxiliary Contacts	inch	8.40	6.40	6.75	5.13	9.69	8.75	4.00
			mm	213.4	162.6	171.5	130.3	246.1	222.3	101.6
	MDS10	Without Auxiliary Contacts	inch	8.40	6.40	6.75	5.13	9.69	8.75	4.00
			mm	213.4	162.6	171.5	130.3	246.1	222.3	101.6

Materials

Body and Cover	Valox®
Cover Screws	Stainless Steel
Inserts for Cover	Brass
Back Panel	14 Gauge Steel
Gaskets	Neoprene

® Registered trademark of GE Company

Horsepower Ratings

Phase	Voltage AC	Horsepower Rating UL/CSA		
		30 Amp	60 Amp	100 Amp
1 Phase	120	1	2	5
	240	2.5	5	15
	480	5	10	25
3 Phase	120	2	5	10
	240	5	10	25
	480	10	20	50
	600	10	20	50

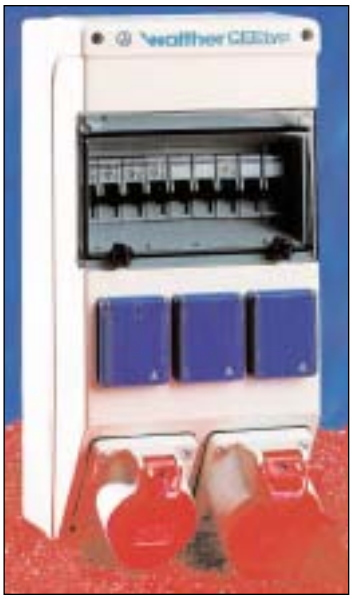

Combination Outlets Save 50 – 75% in Time and Material Costs

Walther Electric introduces a custom-built power distribution system, made up of multiple variations of receptacles, that we call "Combination Outlets".

Combination outlets combine multiple receptacles or an assortment of receptacles into one compact enclosure. By combining numerous receptacles within one electrical enclosure, multiple conduit runs with individual branch circuit wiring can be eliminated; as a result, significantly reducing material costs. These combination outlets are supplied complete with all internal wiring and in most cases only require one connection to the incoming electrical supply conduit.

The Walther combination outlet system utilizes standard NEMA wiring devices, IEC309 pin and sleeve connectors, or practically any type of connection that meets your specific requirements (European "Schuko", French, United Kingdom, Australian, Italian, Swiss, Israeli, Danish, Japanese, etc.).

Because of the compact size of these combinations, installation of multiple receptacles in tight or limited space is normally not a problem. In fact, many of the enclosures are designed to fit within the web of an 8" column allowing the use of columns as a mounting location.

Best of all, overload protection is typically provided with built-in circuit breakers within the enclosure, which are easily accessible by opening the see-through cover. This cover can be secured by a choice of methods ranging from a simple thumbscrew to lockout protection for greater safety and compliance with OSHA Lockout/Tagout regulations. The Walther combination outlet system also utilizes fuses, RCD's, GFCI breakers or practically any type of overload protection that meets your specific requirements.

The high impact thermoplastic and solid rubber enclosures, while abuse and corrosion resistant, are also non conductive, which enhances the safety of the product (consult technical service for stainless steel enclosures).

Each combination is checked in accordance with EN 60 439-1; 1994 table 7 and test certificates are provided with each unit. This test data is saved and can be retrieved at any time.

Walther Electric welcomes the opportunity to manufacture custom combinations of receptacles and inlets built to your specific needs and requirements. The examples shown in this section represent only a small fraction of the possible combinations available. Our application engineers are at your service to help plan and construct combination units according to your specific requirements. Simply call 1-800-WALTHER.

CUSTOM-BUILT COMBINATION OUTLETS

PEDESTALS AND FRAMES FOR CUSTOM-BUILT COMBINATION OUTLETS

NEW!

HANGING COMBINATIONS

NEW!

Walther Electric welcomes the opportunity to manufacture custom combinations of receptacles and inlets built to your specific needs and requirements. The examples shown in this section represent only a small fraction of the possible combinations available. Our application engineers are at your service to help plan and construct combination units according to your specific requirements. Simply call 1-800-WALTHER.

NEW!

Plug (Input)	(Output) No.	(Output) Receptacles	Overload Protection
NEMA L21-30P 30A 3ØY120/208 VAC	3	NEMA 5-20R 20A 125VAC	3 MCB's 1 Pole 20A>>C<<

Plug (Input)	(Output) No.	(Output) Receptacles
IEC 309-1 and 309-2	1	IEC 309-1 and 309-2 5 Wire, 16 Amp
	2	Schuko Socket Outlets

Plug (Input)	(Output) No.	(Output) Receptacles	Overload Protection
IEC309-1 and 309-2 5 Wire, 32 Amp	3	IEC309-1 and 309-2 5 Wire, 32 Amp	1 MCB's 3 Pole 32A>>C<<
	1	IEC309-1 and 309-2 5 Wire, 16 Amp	1 MCB's 3 Pole 16A>>C<<
	3	Schuko Socket Outlets	3 MCB's 1 Pole 16A>>B<<

Plug (Input)	(Output) No.	(Output) Receptacles	Overload Protection
IEC309-1 and 309-2 5 Wire, 63 Amp	2	IEC309-1 and 309-2 5 Wire, 32 Amp	2 MCB's 3 Pole 32A>>C<<
	2	IEC309-1 and 309-2 5 Wire, 16 Amp	2 MCB's 3 Pole 16A>>C<<
	8	Schuko Socket Outlets	4 MCB's 1 Pole 16A>>B<<

Plug (Input)	(Output) No.	(Output) Receptacles	Overload Protection
Stage Pin 60 AMP	3	NEMA 5-20R 20A 125VAC	3 MCB's 1 Pole 20A>>C<<

Plug (Input)	(Output) No.	(Output) Receptacles	Overload Protection
IEC309-1 and 309-2 60A 3ØY120/208 VAC	9	NEMA 5-20R 20A 125VAC	9 MCB's 1 Pole 20A>>C<<

Plug (Input)	(Output) No.	(Output) Receptacles	Overload Protection
Cam Connectors 400 Amp	15	NEMA 5-20R 20A 125VAC	15 MCB's 1 Pole 20A>>C<<

Walther Electric welcomes the opportunity to manufacture custom combinations of receptacles and inlets built to your specific needs and requirements. The examples shown in this section represent only a small fraction of the possible combinations available. Our application engineers are at your service to help plan and construct combination units according to your specific requirements. Simply call 1-800-WALTHER.

NEW!

CONSTRUCTION SITES

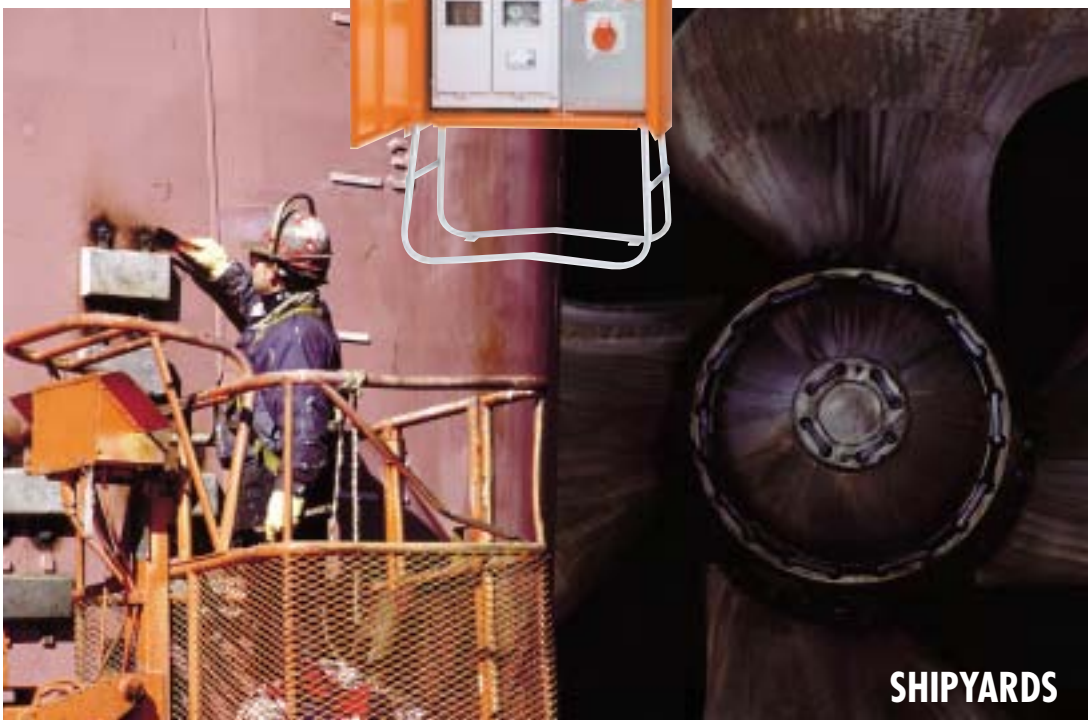

SHIPYARDS

NEW!

CAMPGROUNDS

MARINAS

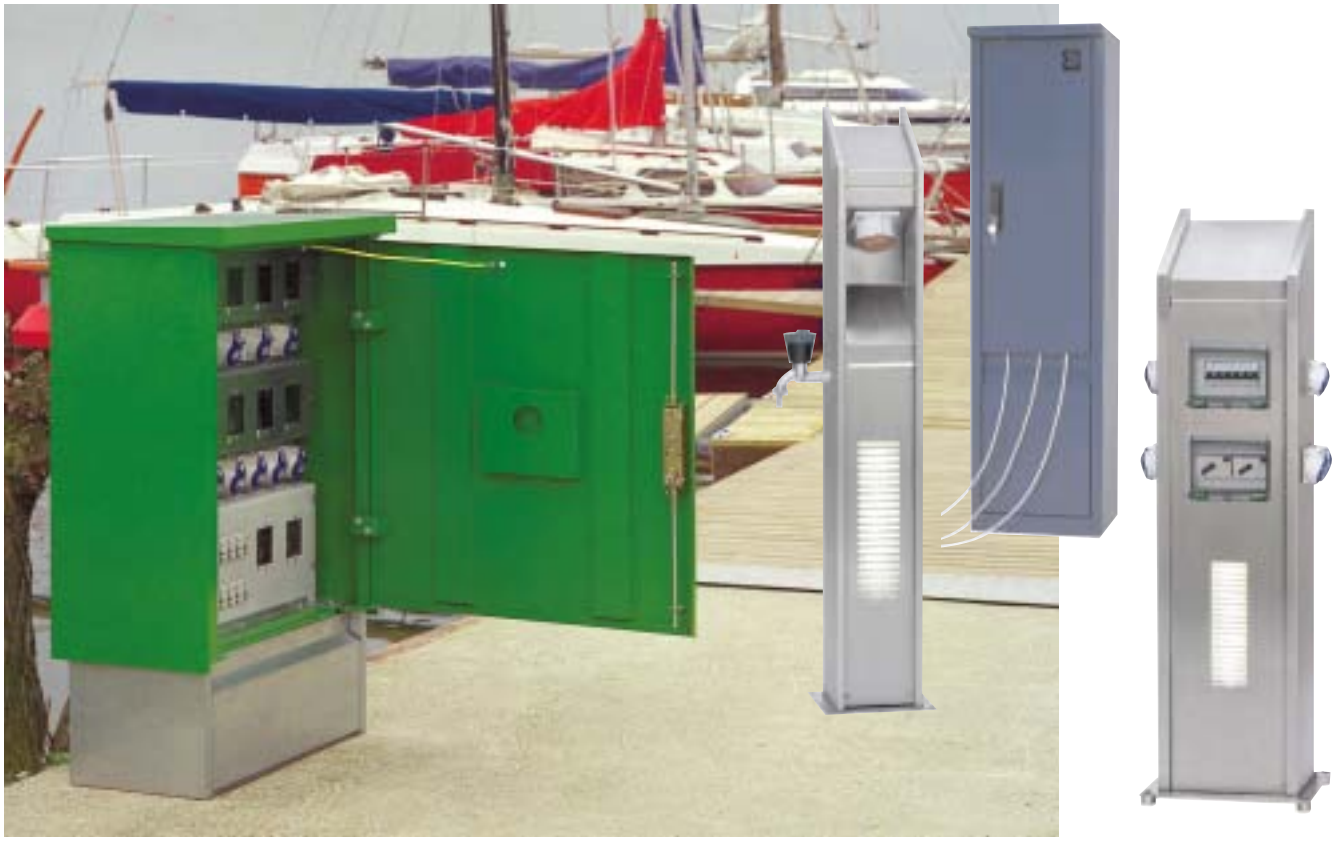

OTHER INDUSTRIES AND APPLICATIONS

- Amusement Parks and Attractions
- Convention Centers, Trade Fairs and Exhibitions
- Fairgrounds, Flea Markets and Bazaars
- Indoor/Outdoor Concerts and Performances
- Military
- Temporary Lighting Systems
- Wherever portable and/or temporary power distribution is required

CUSTOMER INFO

Today's Date: _____

Name: _____

Title/Department: _____

Company: _____

Address: _____

_____

Country: _____

Phone: _____

Fax: _____

Email: _____

Sketch your box here:

Quantity: _____ Delivery Date: _____

Descriptive Comments (IEC, NEMA, etc.):

Special Requirements (Degree of Protection):

Type of Enclosure: ☐ Plastic ☐ Rubber ☐ Other_____

Power Input Plug or Inlet	Output		Overload Protection	Other
	No.	Receptacles		

Input and Receptacles - Specify configuration (NEMA, IEC, etc.), amps, voltage and number of receps required.
Overload Protection - Type of protection; Miniature Circuit Breaker (MCB's), Type, Fuse, GFCI etc.

EXAMPLE:

Power Input Plug or Inlet	Output		Overload Protection	Other
	No.	Receptacles		
IEC 309-1 and 309-2 60A 3ØY120/208 Plug (IP44)	*3*	*NEMA 5-20R Duplex 20A 125VAC*	*3 MCB's 1 Pole 20A Type "C"*	*Circuit Breaker Window with Lockout/Tagout*
	1	*NEMA L21-30R 30A 3ØY120/208*	*1 MCB 3 Pole 30A Type "C"*	

1 Kimberly Road, Suite 102 • East Brunswick, NJ • 08816
Call toll free in the U.S. (800) 925-8437 • (732) 238-1166 • Fax: (732) 238-0764
www.waltherelectric.com