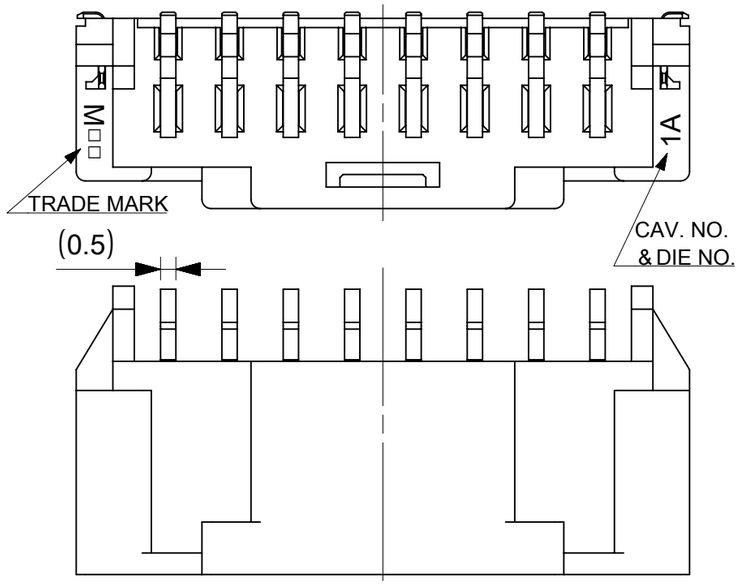

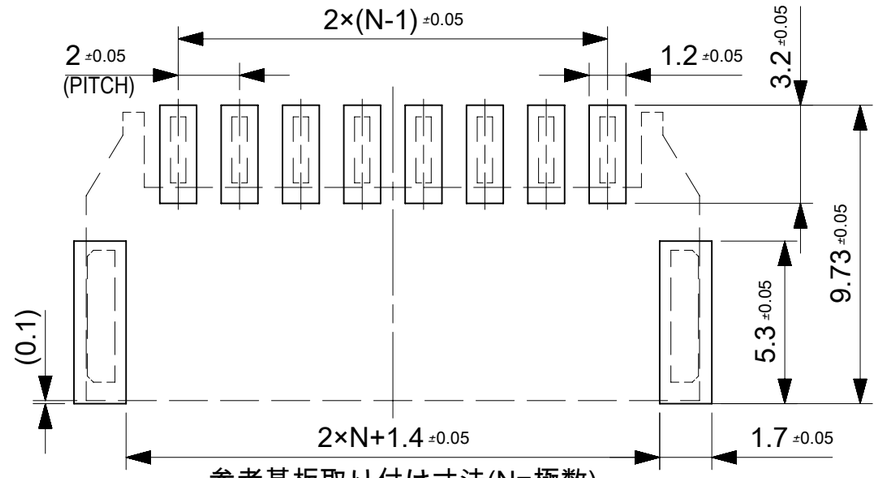

参考基板取り付け寸法(N=極数)
PCB PATTERN LAYOUT (N:CIRCUIT)

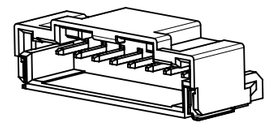

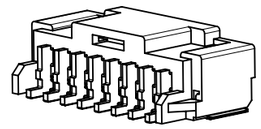

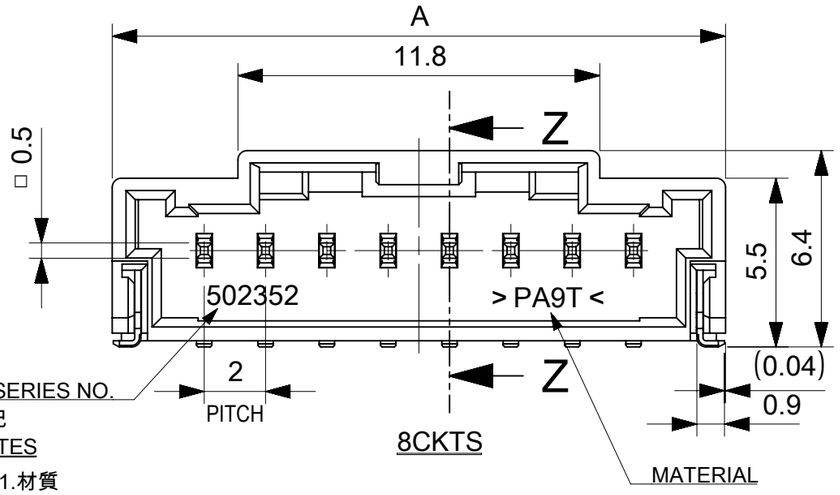

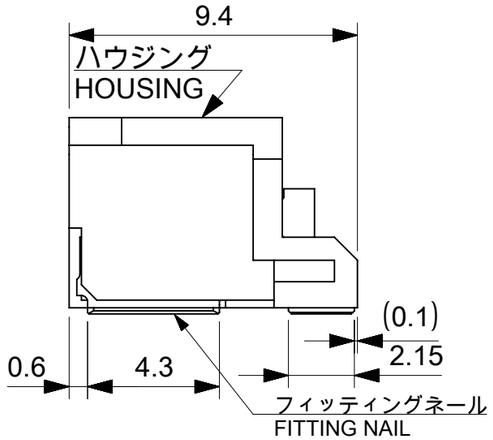

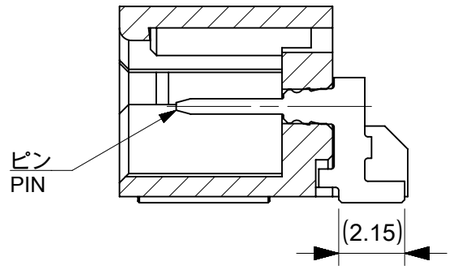

SECTION Z-Z

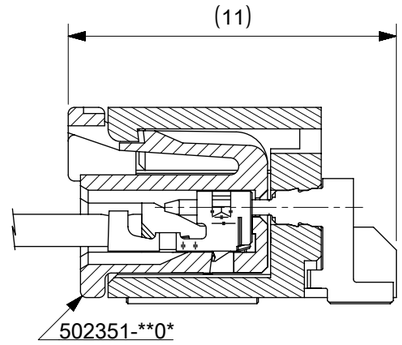

嵌合寸法
MATED DIMENSION

注記
NOTES

1.材質
ハウジング：耐熱性ナイロンUL94V-0
ピン：銅合金、ニッケル下地、錫メッキ、金メッキ
フィッティングネール：銅合金、ニッケル下地、錫メッキ
MATERIAL
HOUSING:POLYAMIDE UL94V-0
PIN: COPPER ALLOY, GOLD OR TIN OVER NICKEL PLATE.
FITTING NAIL: COPPER ALLOY, TIN OVER NICKEL PLATE.

2.色：ナチュラル、黒、赤、青
COLOR:NATURAL, BLACK, RED, BLUE

3.嵌合相手
ハウジング：502351-**0*
錫メッキ端子：50212-8*00,50372-8*00,560085-0101
金メッキ端子：56161-8*81
MATES WITH
HOUSING:502351-**0*
SN PLATING TERMINAL:50212-8*00,50372-8*00,560085-0101
AU PLATING TERMINAL:56161-8*81

4.エンボス梱包品の詳細はSD-502352-002参照
DETAILED TAPING PACKAGE, SEE SD-502352-002.

5.ELV及びRoHS適合
ELV AND RoHS COMPLIANT

6.半田付け面のコプラナリティ：0.1mm MAX.
CO-PLANARITY OF SOLDERING TAILS TO BE 0.1mm MAX.

7.一般公差
GENERAL TOLERANCES
10 UNDER: 0.2
10 OVER 30 UNDER:0.25
30 OVER: 0.3
ANGULAR: ±3°

RELEASE STATUS	P1	RELEASE DATE	06.12.2017 10:06:06

THIS DRAWING CONTAINS INFORMATION THAT IS PROPRIETARY TO MOLEX ELECTRONIC TECHNOLOGIES, LLC AND SHOULD NOT BE USED WITHOUT WRITTEN PERMISSION

EC NO: 169036	DRWN: TMORISHITA	2017/11/30
CHK'D: HKOMATSU	APPR: TOSADA	2017/12/06 2017/12/06

GENERAL TOLERANCES (UNLESS SPECIFIED)
ANGULAR TOL ± °
4 PLACES ±
3 PLACES ±
2 PLACES ±
1 PLACE ±
0 PLACES ±
DRAFT WHERE APPLICABLE MUST REMAIN WITHIN DIMENSIONS

REV K1

DIMENSION UNITS	SCALE
mm	5:1
DRWN BY SHSHIBATA	DATE 2007/12/18
CHK'D BY HKOMATSU	DATE 2007/12/18
APPR BY AKANESHIGE	DATE 2007/12/18
DRAWING SIZE A3	THIRD ANGLE PROJECTION

molex®

2.0MM PITCH W/B CONN.
WAFER ASSY R/A SMT

PRODUCT CUSTOMER DRAWING

SERIES	MATERIAL NUMBER	CUSTOMER
502352	SEE CHART	GENERAL MARKET

DOCUMENT NUMBER	DOC TYPE	DOC PART	SHEET NUMBER
SD-502352-001	PSD	001	1 OF 4

FORMAT: master-tb-prod-A3
REVISION: G
DATE: 2017/02/06

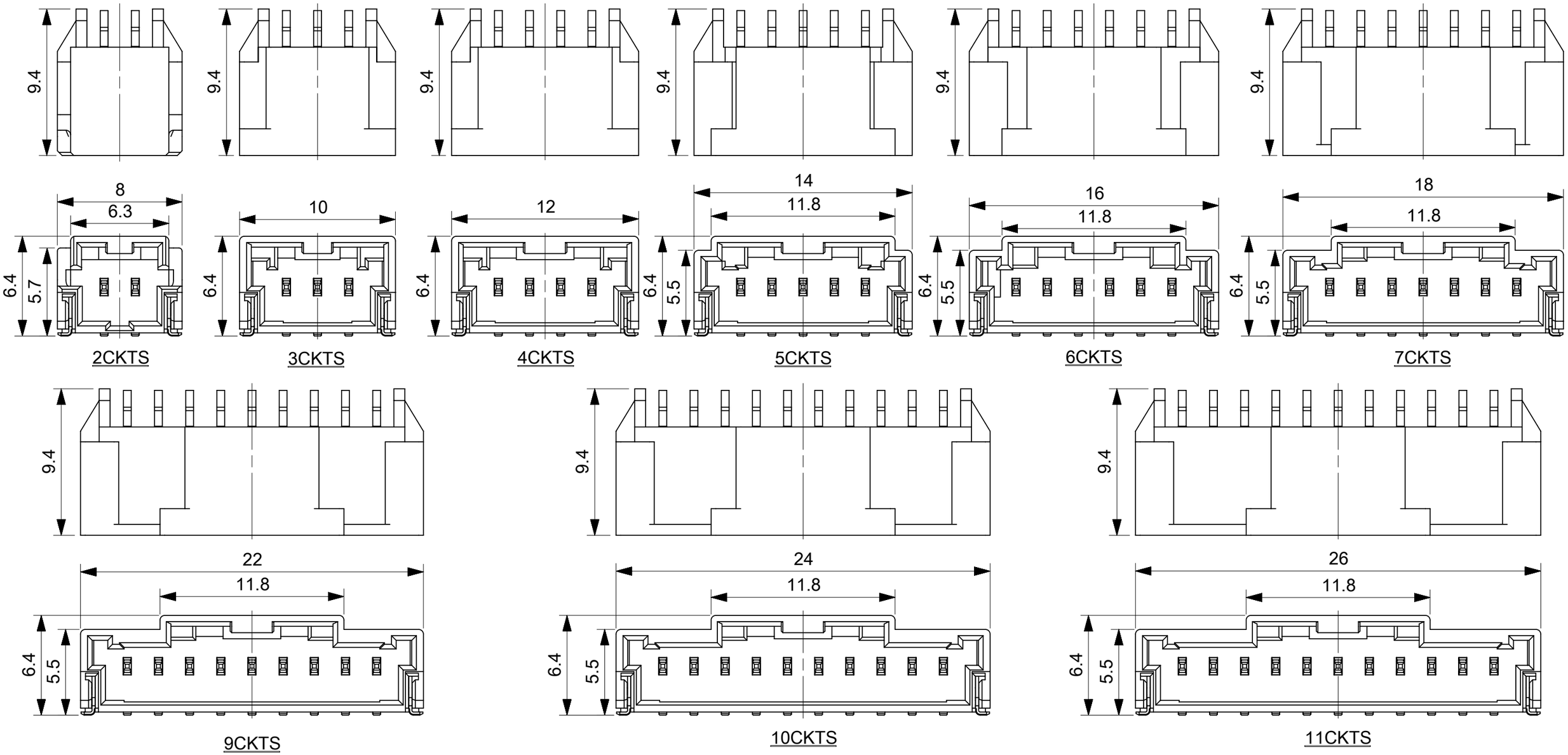

THIS DRAWING CONTAINS INFORMATION THAT IS PROPRIETARY TO MOLEX ELECTRONIC TECHNOLOGIES, LLC AND SHOULD NOT BE USED WITHOUT WRITTEN PERMISSION

EC NO: 169036	2017/11/30	DRWN: TMORISHITA	2017/12/06
CHK'D: HKOMATSU	2017/12/06	APPR: TOSADA	2017/12/06

GENERAL TOLERANCES (UNLESS SPECIFIED)

ANGULAR TOL ±	°
4 PLACES	±
3 PLACES	±
2 PLACES	±
1 PLACE	±
0 PLACES	±

DRAFT WHERE APPLICABLE MUST REMAIN WITHIN DIMENSIONS

DIMENSION UNITS	mm
SCALE	4:1
DRWN BY	SHSHIBATA
DATE	2007/12/18
CHK'D BY	HKOMATSU
DATE	2007/12/18
APPR BY	AKANESHIGE
DATE	2007/12/18
DRAWING SIZE	A3
THIRD ANGLE PROJECTION	

K1 REV

molex®

2.0MM PITCH W/B CONN.
WAFER ASSY R/A SMT

PRODUCT CUSTOMER DRAWING

SERIES	MATERIAL NUMBER	CUSTOMER
502352	SEE CHART	GENERAL MARKET

DOCUMENT NUMBER	DOC TYPE	DOC PART	SHEET NUMBER
SD-502352-001	PSD	001	2 OF 4

RELEASE STATUS	P1	RELEASE DATE	06.12.2017 10:06:06

FORMAT: master-lb-prod-A3
REVISION: G
DATE: 2017/02/06

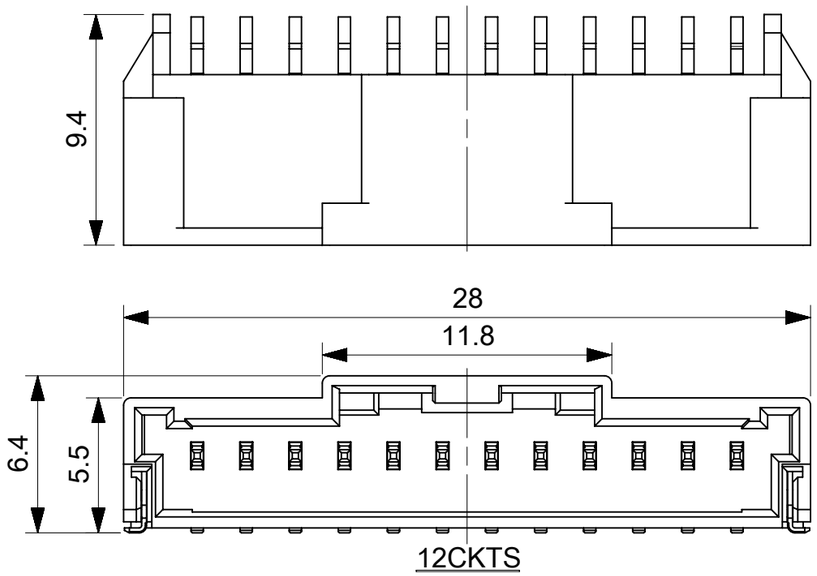

12CKTS

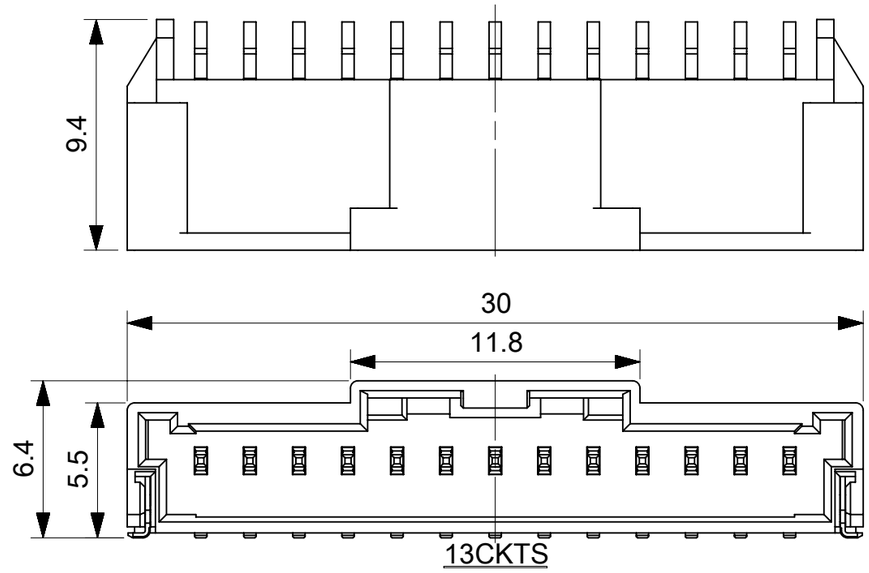

13CKTS

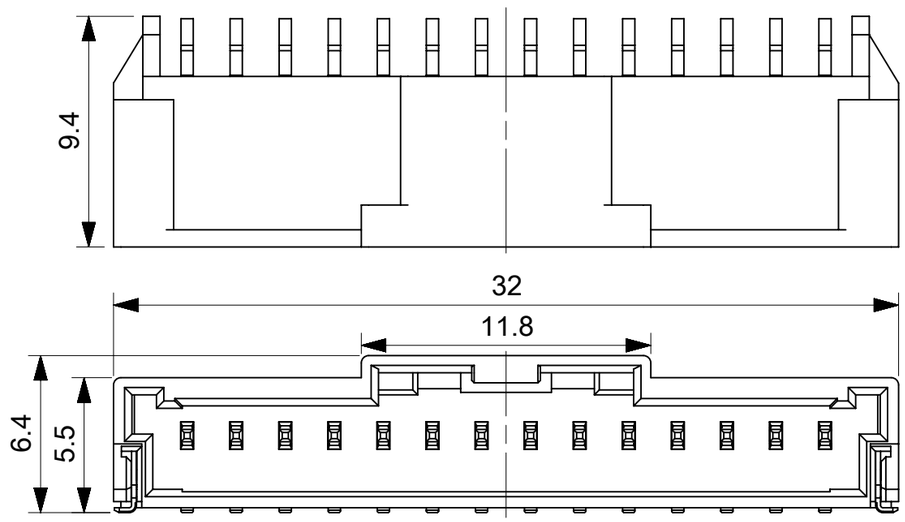

14CKTS

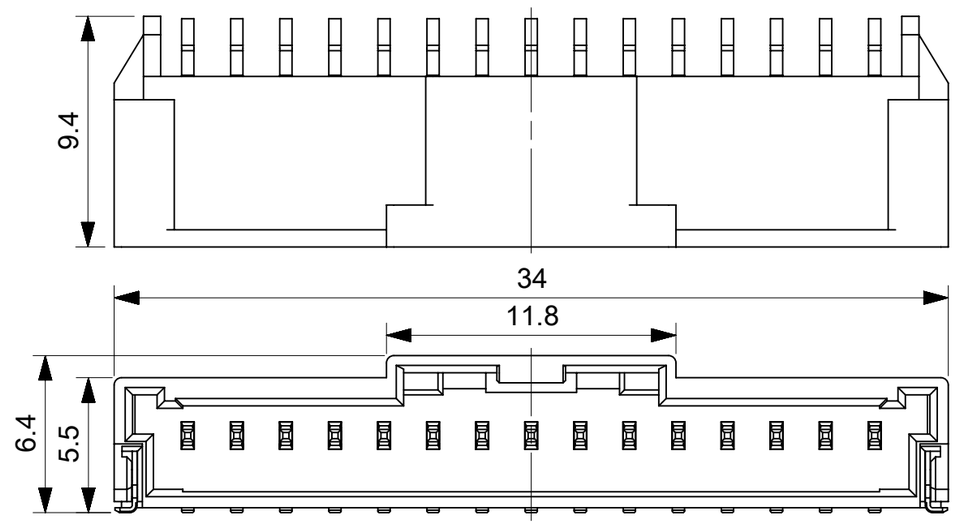

15CKTS

THIS DRAWING CONTAINS INFORMATION THAT IS PROPRIETARY TO MOLEX ELECTRONIC TECHNOLOGIES, LLC AND SHOULD NOT BE USED WITHOUT WRITTEN PERMISSION

EC NO: 169036	DRWN: TMORISHITA	2017/11/30
CHK'D: HKOMATSU		2017/12/06
APPR: TOSADA		2017/12/06

GENERAL TOLERANCES (UNLESS SPECIFIED)

ANGULAR TOL ±	°
4 PLACES	±
3 PLACES	±
2 PLACES	±
1 PLACE	±
0 PLACES	±

DRAFT WHERE APPLICABLE MUST REMAIN WITHIN DIMENSIONS

REV: K1

DIMENSION UNITS	mm
SCALE	4:1
DRWN BY	SHSHIBATA
DATE	2007/12/18
CHK'D BY	HKOMATSU
DATE	2007/12/18
APPR BY	AKANESHIGE
DATE	2007/12/18
DRAWING SIZE	A3
THIRD ANGLE PROJECTION	

molex®

2.0MM PITCH W/B CONN.
WAFER ASSY R/A SMT

PRODUCT CUSTOMER DRAWING

SERIES	MATERIAL NUMBER	CUSTOMER
502352	SEE CHART	GENERAL MARKET

DOCUMENT NUMBER	DOC TYPE	DOC PART	SHEET NUMBER
SD-502352-001	PSD	001	3 OF 4

RELEASE STATUS	P1	RELEASE DATE	06.12.2017 10:06:06

FORMAT: master-tb-prod-A3
REVISION: G
DATE: 2017/02/06

Sn NATURAL	34.0	502352-1500	15
	32.0	502352-1400	14
	30.0	502352-1300	13
	28.0	502352-1200	12
	26.0	502352-1100	11
	24.0	502352-1000	10
	22.0	502352-0900	9
	20.0	502352-0800	8
	18.0	502352-0700	7
	16.0	502352-0600	6
	14.0	502352-0500	5
	12.0	502352-0400	4
	10.0	502352-0300	3
	8.0	502352-0200	2
PLATING COLOR	A	EMBOSSED PACKAGE ORDER NO.	CKTS
CONNECTOR SERIES NO. 502352-**08			

Au NATURAL	34.0	502352-1510	15
	32.0	502352-1410	14
	30.0	502352-1310	13
	28.0	502352-1210	12
	26.0	502352-1110	11
	24.0	502352-1010	10
	22.0	502352-0910	9
	20.0	502352-0810	8
	18.0	502352-0710	7
	16.0	502352-0610	6
	14.0	502352-0510	5
	12.0	502352-0410	4
	10.0	502352-0310	3
	8.0	502352-0210	2
PLATING COLOR	A	EMBOSSED PACKAGE ORDER NO.	CKTS
CONNECTOR SERIES NO. 502352-**18			

Sn BLACK	-	-	15
	-	-	14
	-	-	13
	-	-	12
	-	-	11
	-	-	10
	-	-	9
	20.0	502352-0801	8
	18.0	502352-0701	7
	16.0	502352-0601	6
	14.0	502352-0501	5
	12.0	502352-0401	4
	10.0	502352-0301	3
	8.0	502352-0201	2
PLATING COLOR	A	EMBOSSED PACKAGE ORDER NO.	CKTS
CONNECTOR SERIES NO. 502352-**28			

Sn RED	-	-	15
	-	-	14
	-	-	13
	-	-	12
	-	-	11
	-	-	10
	-	-	9
	20.0	502352-0802	8
	-	-	7
	16.0	502352-0602	6
	-	-	5
	12.0	502352-0402	4
	10.0	502352-0302	3
	8.0	502352-0202	2
PLATING COLOR	A	EMBOSSED PACKAGE ORDER NO.	CKTS
CONNECTOR SERIES NO. 502352-**48			

Sn BLUE	-	-	15
	-	-	14
	-	-	13
	-	-	12
	-	-	11
	-	-	10
	-	-	9
	20.0	502352-0803	8
	-	-	7
	16.0	502352-0603	6
	-	-	5
	12.0	502352-0403	4
	10.0	502352-0303	3
	8.0	502352-0203	2
PLATING COLOR	A	EMBOSSED PACKAGE ORDER NO.	CKTS
CONNECTOR SERIES NO. 502352-**68			

THIS DRAWING CONTAINS INFORMATION THAT IS PROPRIETARY TO MOLEX ELECTRONIC TECHNOLOGIES, LLC AND SHOULD NOT BE USED WITHOUT WRITTEN PERMISSION

EC NO: 169036 2017/11/30
DRWN: TMORISHITA 2017/12/06
CHK'D: HKOMATSU 2017/12/06
APPR: TOSADA

GENERAL TOLERANCES (UNLESS SPECIFIED)

ANGULAR TOL ±	°
4 PLACES	±
3 PLACES	±
2 PLACES	±
1 PLACE	±
0 PLACES	±

DRAFT WHERE APPLICABLE MUST REMAIN WITHIN DIMENSIONS

REV K1

DIMENSION UNITS: mm
SCALE: 1:1
DRWN BY: SHSHIBATA DATE: 2007/12/18
CHK'D BY: HKOMATSU DATE: 2007/12/18
APPR BY: AKANESHIGE DATE: 2007/12/18
DRAWING SIZE: A3
THIRD ANGLE PROJECTION

molex®

2.0MM PITCH W/B CONN.
WAFER ASSY R/A SMT

PRODUCT CUSTOMER DRAWING

SERIES	MATERIAL NUMBER	CUSTOMER
502352	SEE CHART	GENERAL MARKET

DOCUMENT NUMBER	DOC TYPE	DOC PART	SHEET NUMBER
SD-502352-001	PSD	001	4 OF 4

RELEASE STATUS	P1	RELEASE DATE	06.12.2017 10:06:06

FORMAT: master-tb-prod-A3
REVISION: G
DATE: 2017/02/06

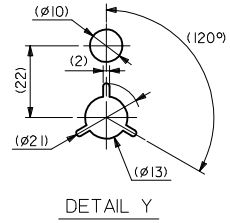

DETAIL Y

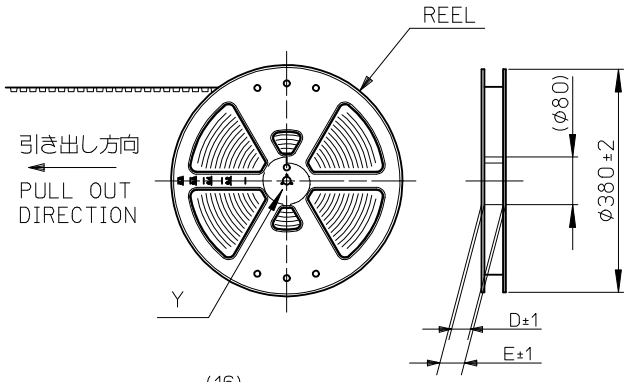

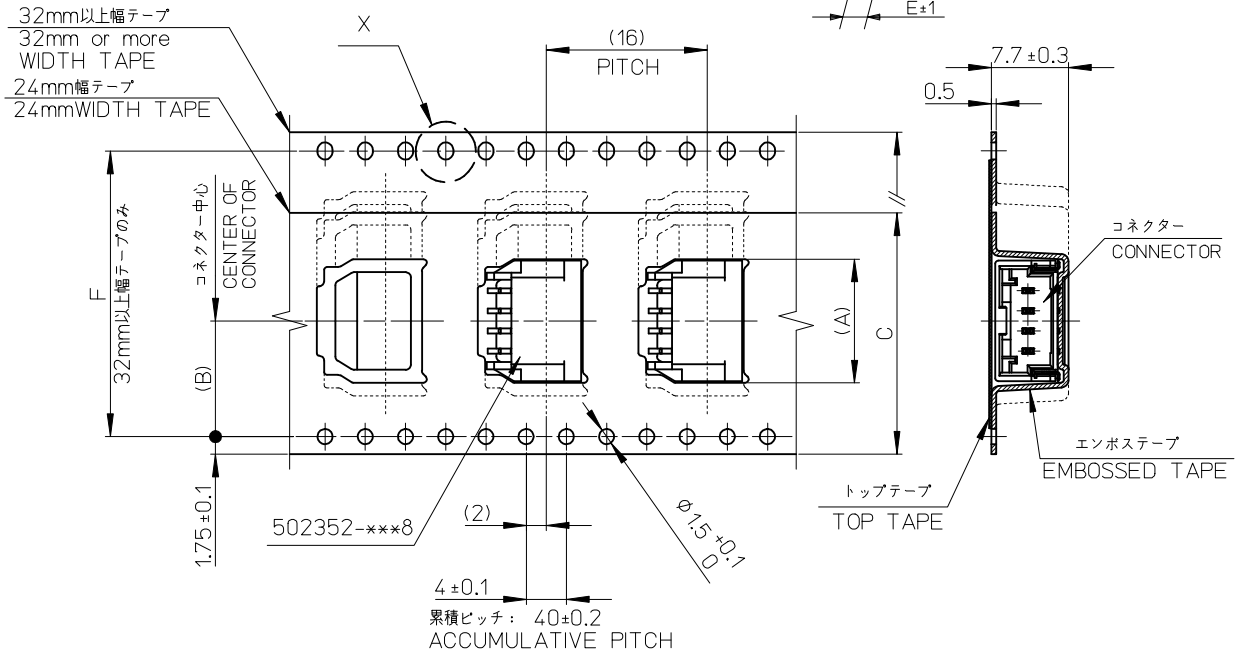

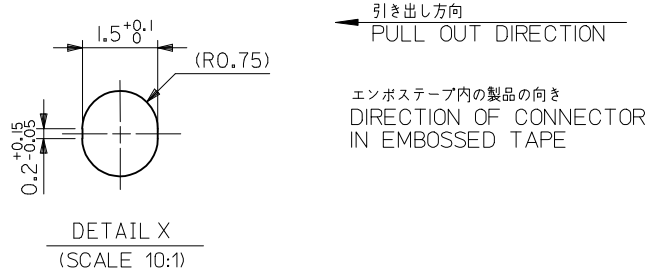

注記
NOTES

1. 製品番号
   ナチュラル・錫めっき: 502352-**00
   ナチュラル・金めっき: 502352-**10
   黒・錫めっき: 502352-**01
   赤・錫めっき: 502352-**02
   青・錫めっき: 502352-**03
   詳細寸法については、製品単体図面を参照下さい。
   PART NO.
   NATURAL Sn Plating: 502352-**00
   NATURAL Au Plating: 502352-**10
   BLACK Sn Plating: 502352-**01
   RED Sn Plating: 502352-**02
   BLUE Sn Plating: 502352-**03
   SEE SALES DRAWING FOR CONNECTOR
2. 梱包数量： 700個/リール
   NUMBER OF CONNECTORS 700PCS/REEL
3. リードテープ長さ
   LEAD TAPE LENGHT

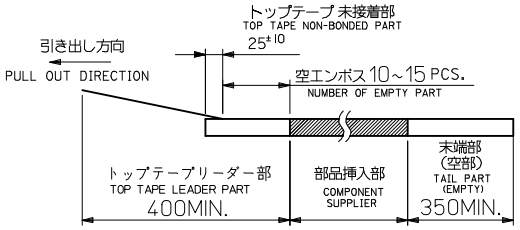

4. 材料
   MATERIAL
   キャリアテープ： ポリスチレン
   CARRIER TAPE: POLYSTYRENE
   トップテープ： PET, PE, PEF
   TOP TAPE: PET, PE, PEF
   リール： ポリスチレン
   REEL: POLYSTYRENE
5. 一般降参
   GENERAL TOLERANCES
   10 UNDER: 0.2
   10 OVER 30 UNDER: 0.25
   30 OVER: 0.3
   ANGULAR: ±1°

REVISED
EC NO: JTR2016-0015
DRWN:KNAGAI02 2016/03/01
CH'KD:HKOMATSU 2016/03/04
APPR:MAYAMAMOTO 2016/03/08
J

REV	DESCRIPTION

QUALITY SYMBOLS
F_A=0
F_C=0
F_P=0

GENERAL TOLERANCES (UNLESS SPECIFIED)

	mm	INCH
4 PLACES	±---	±---
3 PLACES	±---	±---
2 PLACES	±---	±---
1 PLACE	±---	±---
0 PLACE	±---	±---

ANGULAR ± - °
DRAFT WHERE APPLICABLE MUST REMAIN WITHIN DIMENSIONS

DIMENSION STYLE: MM ONLY	SCALE	DESIGN UNITS: METRIC	THIRD ANGLE PROJECTION
DRAWN BY: SHSHIBATA	DATE: 2007/6/6	TITLE: 2.0MM PITCH W/B CONN. WAFER ASSY EMBOSSED TAPE PACKAGE	
CHECKED BY: TAITO	DATE: 2007/6/6		
APPROVED BY: MAYAMAMOTO	DATE: 2012/03/14	molex	
MATERIAL NO.: SEE CHART		DOCUMENT NO.: SD-502352-002	SHEET NO.: 1 OF 2
SIZE: A3			

THIS DRAWING CONTAINS INFORMATION THAT IS PROPRIETARY TO MOLEX INCORPORATED AND SHOULD NOT BE USED WITHOUT WRITTEN PERMISSION

Sn NATURAL	52.4	61.4	57.4	56	26.2	34.3	502352-1500	15
						32.3	502352-1400	14
	40.4	49.4	45.4	44	20.2	30.3	502352-1300	13
						28.3	502352-1200	12
						26.3	502352-1100	11
						24.3	502352-1000	10
						22.3	502352-0900	9
	28.4	37.4	33.4	32	14.2	20.3	502352-0800	8
						18.3	502352-0700	7
						16.3	502352-0600	6
		29.4	25.4	24	11.5	14.3	502352-0500	5
						12.3	502352-0400	4
						10.3	502352-0300	3
						8.3	502352-0200	2
PLATING COLOR	F	E	D	C	(B)	(A)	エンボス梱包品 製品番号 MATERIAL NO.	極数 CKT.

Au NATURAL	52.4	61.4	57.4	56	26.2	34.3	502352-1510	15
						32.3	502352-1410	14
	40.4	49.4	45.4	44	20.2	30.3	502352-1310	13
						28.3	502352-1210	12
						26.3	502352-1110	11
						24.3	502352-1010	10
						22.3	502352-0910	9
	28.4	37.4	33.4	32	14.2	20.3	502352-0810	8
						18.3	502352-0710	7
						16.3	502352-0610	6
		29.4	25.4	24	11.5	14.3	502352-0510	5
						12.3	502352-0410	4
						10.3	502352-0310	3
						8.3	502352-0210	2
PLATING COLOR	F	E	D	C	(B)	(A)	エンボス梱包品 製品番号 MATERIAL NO.	極数 CKT.

Sn BLACK								15
								14
								13
								12
								11
								10
								9
	28.4	37.4	33.4	32	14.2	20.3	502352-0801	8
						18.3	502352-0701	7
						16.3	502352-0601	6
		29.4	25.4	24	11.5	14.3	502352-0501	5
						12.3	502352-0401	4
						10.3	502352-0301	3
						8.3	502352-0201	2
PLATING COLOR	F	E	D	C	(B)	(A)	エンボス梱包品 製品番号 MATERIAL NO.	極数 CKT.

Sn RED								15
								14
								13
								12
								11
								10
								9
	28.4	37.4	33.4	32	14.2	20.3	502352-0802	8
								7
						16.3	502352-0602	6
		29.4	25.4	24	11.5			5
						12.3	502352-0402	4
						10.3	502352-0302	3
						8.3	502352-0202	2
PLATING COLOR	F	E	D	C	(B)	(A)	エンボス梱包品 製品番号 MATERIAL NO.	極数 CKT.

Sn BLUE								15
								14
								13
								12
								11
								10
								9
	28.4	37.4	33.4	32	14.2	20.3	502352-0803	8
								7
						16.3	502352-0603	6
		29.4	25.4	24	11.5			5
						12.3	502352-0403	4
						10.3	502352-0303	3
						8.3	502352-0203	2
PLATING COLOR	F	E	D	C	(B)	(A)	エンボス梱包品 製品番号 MATERIAL NO.	極数 CKT.

REVISED
EC NO: JTR2016-0015 2016/03/01
DRWN:KNAGAI02 2016/03/04
CH'KD:HKOMATSU 2016/03/08
APPR:MAYAMAMOTO
DESCRIPTION
REV
J

QUALITY SYMBOLS
E =0
C =0
P =0

GENERAL TOLERANCES (UNLESS SPECIFIED)

	mm	INCH
4 PLACES	± ---	± ---
3 PLACES	± ---	± ---
2 PLACES	± ---	± ---
1 PLACE	± ---	± ---
0 PLACE	± ---	± ---
ANGULAR ± - °		

DRAFT WHERE APPLICABLE MUST REMAIN WITHIN DIMENSIONS

DIMENSION STYLE: MM ONLY
SCALE: 1:1
DESIGN UNITS: METRIC
THIRD ANGLE PROJECTION

DRAWN BY: SHSHIBATA DATE: 2007/6/6
CHECKED BY: TAITO DATE: 2007/6/6
APPROVED BY: MAYAMAMOTO DATE: 2012/03/14

TITLE: 2.0MM PITCH W/B CONN. WAFER ASSY EMBOSSED TAPE PACKAGE

molex

MATERIAL NO.: SEE CHART
DOCUMENT NO.: SD-502352-002
SHEET NO.: 2 OF 2
SIZE: A3

THIS DRAWING CONTAINS INFORMATION THAT IS PROPRIETARY TO MOLEX INCORPORATED AND SHOULD NOT BE USED WITHOUT WRITTEN PERMISSION

tb_frame_A3_P_AM_T
Rev. G 2012/01/11