THROUGH HOLE VERSION (STRAIGHT ASSEMBLY)

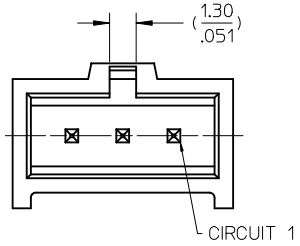

1 TO 3 CIRCUITS

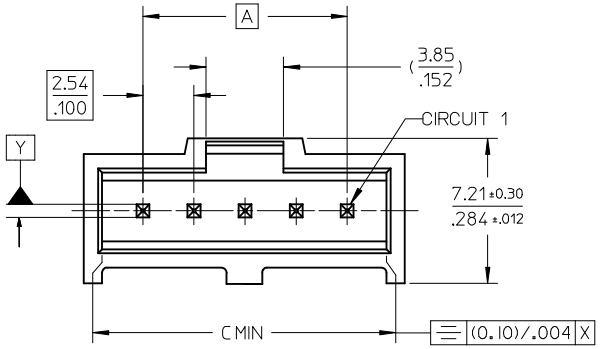

4 TO 32 CIRCUITS

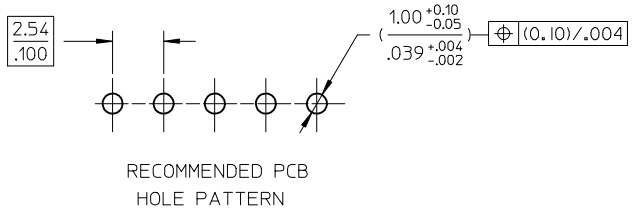

RECOMMENDED PCB HOLE PATTERN

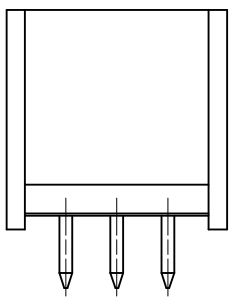

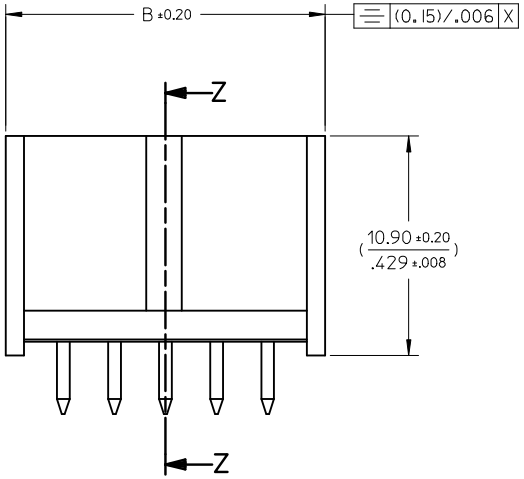

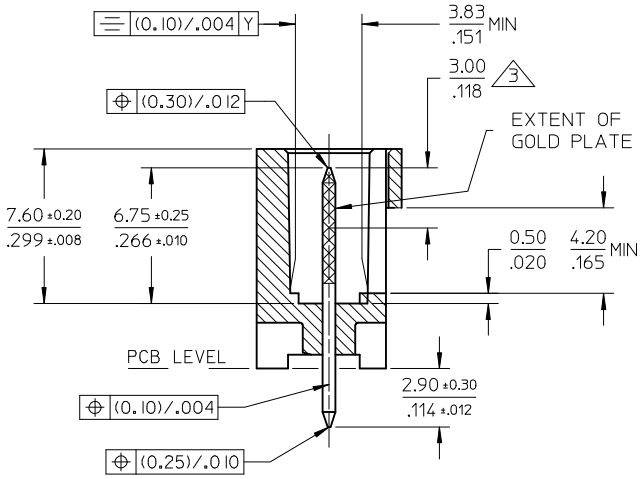

SECTION Z-Z

NOTES :

1. MATERIALS :
   - PIN : (0.650)/ .0255 SQ. BRASS WIRE.
   - HOUSING : 15% GLASS FILLED POLYESTER
   - UL 94V-0 COLOR BLACK
2. FOR PLATINGVERSIONS, SEE SHEET 2.
3. MEASUREMENT POINT FOR MINIMUM PLATING THICKNESS.
4. PRODUCT SPEC: PS-99020-0001
5. RECOMMENDED PCB THICKNESS 1.6mm

UPDATE DRAWING	2014/04/01	DRWN:ATSEE	
EC NO: S2014-0925	2014/04/17	CH'KD:FANNYWONG	
	2014/04/10	APPR:LBLEE	
AF	REV	DESCRIPTION	

QUALITY SYMBOLS: F_A=0, F_C=0, F_P=0

GENERAL TOLERANCES (UNLESS SPECIFIED)	mm	INCH
4 PLACES	± ---	± ---
3 PLACES	± ---	± .004
2 PLACES	± 0.10	± ---
1 PLACE	± ---	± ---
0 PLACE	±	±
ANGULAR ±1/2°		

DRAFT WHERE APPLICABLE MUST REMAIN WITHIN DIMENSIONS

DIMENSION STYLE: MM/IN	SCALE: NTS	DESIGN UNITS: METRIC	THIRD ANGLE PROJECTION
DRAWN BY: KS	DATE: 1987/10/30	TITLE: C-GRID III SINGLE ROW STRAIGHT SHROUDED HEADER	
CHECKED BY: BENRIGHT	DATE: 2002/08/15		
APPROVED BY: MLONG	DATE: 2011/04/15	molex	
MATERIAL NO.: SEE TABLE		DOCUMENT NO.: SDA-90136	SHEET NO.: 1 OF 3
SIZE: A3	THIS DRAWING CONTAINS INFORMATION THAT IS PROPRIETARY TO MOLEX INCORPORATED AND SHOULD NOT BE USED WITHOUT WRITTEN PERMISSION		

RIGHT ANGLE VERSION

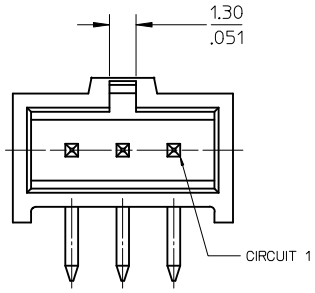

1 TO 3 CIRCUITS

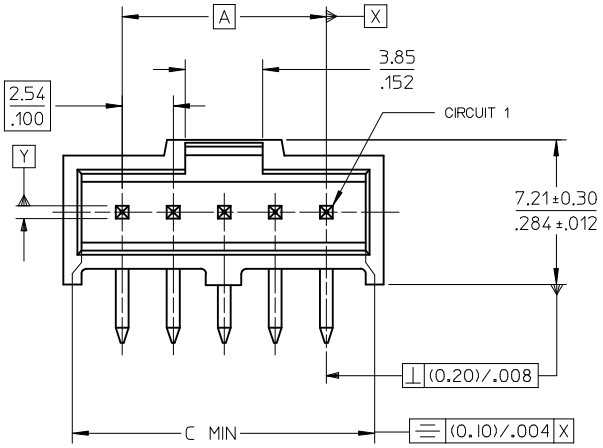

4 TO 32 CIRCUITS

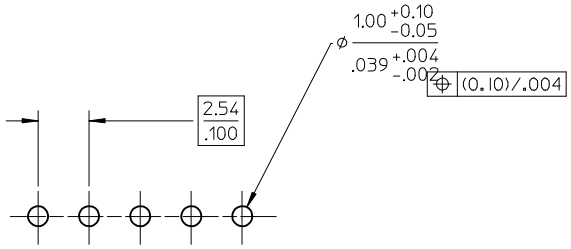

RECOMMENDED PCB PATTERN

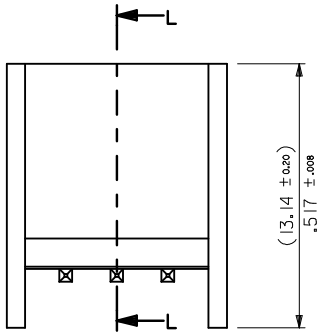

1 TO 6 CIRCUITS

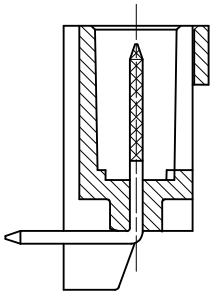

SECTION L-L

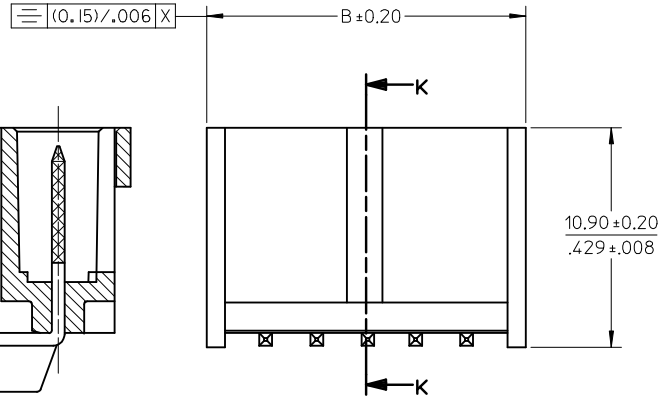

7 TO 32 CIRCUITS

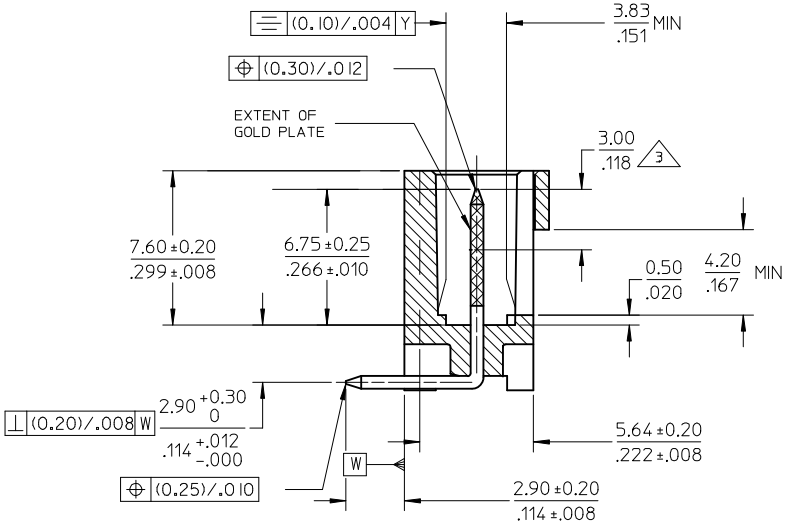

SECTION K-K

UPDATE DRAWING EC NO: S2014-0925 DRWN:ATSEE 2014/04/01 CH'KD:FANNYWONG 2014/04/17 APPR:LBLEE 2014/04/10 DESCRIPTION AF REV	QUALITY SYMBOLS $\sqrt{F_A}$=0 $\sqrt{F_C}$=0 $\sqrt{F_P}$=0	GENERAL TOLERANCES (UNLESS SPECIFIED) mm / INCH 4 PLACES ±--- / ±--- 3 PLACES ±--- / ±.004 2 PLACES ±0.10 / ±--- 1 PLACE ±--- / ±--- 0 PLACE ± / ± ANGULAR ±1/2° DRAFT WHERE APPLICABLE MUST REMAIN WITHIN DIMENSIONS	DIMENSION STYLE MM/IN DRAWN BY KS DATE 1987/10/30 CHECKED BY BENRIGHT DATE 2002/08/15 APPROVED BY MLONG DATE 2011/04/15 MATERIAL NO. SEE TABLE	SCALE NTS DESIGN UNITS METRIC THIRD ANGLE PROJECTION TITLE C-GRID III SINGLE ROW STRAIGHT SHROUDED HEADER molex DOCUMENT NO. SDA-90136 SHEET NO. 2 OF 3	SIZE A3	THIS DRAWING CONTAINS INFORMATION THAT IS PROPRIETARY TO MOLEX INCORPORATED AND SHOULD NOT BE USED WITHOUT WRITTEN PERMISSION

tb_frame_A3_P_AM_T
Rev. G 2012/01/11

CKTS	ASSEMBLY P/N	DIM A	DIM B	DIM C
1	90136-**01	-	(5.89)/.232	(4.06)/.160
2	90136-**02	(2.54)/.100	(8.43)/.332	(6.60)/.260
3	90136-**03	(5.08)/.200	(10.97)/.432	(9.14)/.360
4	90136-**04	(7.62)/.300	(13.51)/.532	(11.68)/.460
5	90136-**05	(10.16)/.400	(16.05)/.632	(14.22)/.560
6	90136-**06	(12.70)/.500	(18.59)/.732	(16.76)/.660
7	90136-**07	(15.24)/.600	(21.13)/.832	(19.30)/.760
8	90136-**08	(17.78)/.700	(23.67)/.932	(21.84)/.860
9	90136-**09	(20.32)/.800	(26.21)/1.032	(24.38)/.960
10	90136-**10	(22.86)/.900	(28.75)/1.132	(26.92)/1.060
11	90136-**11	(25.4)/1.000	(31.29)/1.232	(29.46)/1.160
12	90136-**12	(27.94)/1.100	(33.83)/1.332	(32.00)/1.260
13	90136-**13	(30.48)/1.200	(36.37)/1.432	(34.54)/1.360
14	90136-**14	(33.02)/1.300	(38.91)/1.532	(37.08)/1.460
15	90136-**15	(35.56)/1.400	(41.45)/1.632	(39.62)/1.560
16	90136-**16	(38.10)/1.500	(43.99)/1.732	(42.16)/1.660
17	90136-**17	(40.64)/1.600	(46.53)/1.832	(44.70)/1.760
18	90136-**18	(43.18)/1.700	(49.07)/1.932	(47.24)/1.860
19	90136-**19	(45.72)/1.800	(51.61)/2.032	(49.78)/1.960
20	90136-**20	(48.26)/1.900	(54.15)/2.132	(52.32)/2.060
21	90136-**21	(50.80)/2.000	(56.69)/2.232	(54.86)/2.160
22	90136-**22	(53.34)/2.100	(59.23)/2.332	(57.40)/2.260
23	90136-**23	(55.88)/2.200	(61.77)/2.432	(59.94)/2.360
24	90136-**24	(58.42)/2.300	(64.31)/2.532	(62.48)/2.460
25	90136-**25	(60.96)/2.400	(66.85)/2.632	(65.02)/2.560
26	90136-**26	(63.50)/2.500	(69.39)/2.732	(67.56)/2.660
27	90136-**27	(66.04)/2.600	(71.93)/2.832	(70.10)/2.760
28	90136-**28	(68.58)/2.700	(74.47)/2.932	(72.64)/2.860
29	90136-**29	(71.12)/2.800	(77.01)/3.032	(75.18)/2.960
30	90136-**30	(73.66)/2.900	(79.55)/3.132	(77.72)/3.060
31	90136-**31	(76.20)/3.000	(82.09)/3.232	(80.26)/3.160
32	90136-**32	(78.74)/3.100	(84.63)/3.332	(82.80)/3.260

NOTES

6. FOR PLATING DETAILS SEE SDES 99000-0003

90136 - X X X X

- X X X X: INDICATES NO. OF CIRCUITS
- X X: PLATING
  - 1 - TYPE A
  - 2 - TYPE E
  - 3 - TYPE F
  - 4 - TYPE G
- X: STYLE
  - STYLE - 1 - STRAIGHT ASSEMBLY
  - STYLE - 2 - RIGHT ANGLE ASSEMBLY
  - STYLE - 5 - STRAIGHT ASSEMBLY WITH VOIDS
  - STYLE - 7 - NON STANDARD PRODUCT

7. PLATING TYPES

1 - TYPE A
TIN 3.0μm MIN. OVER 1.27 - 2.54μm NICKEL.

2 - TYPE E
GOLD STRIPE 0.38 - 0.64μm IN SELECTED AREA
(2 SIDES) & 3.0μm MIN TIN IN SELECTED AREA
OVER 1.3 - 1.78μm NICKEL OVERALL.

3 - TYPE F
GOLD STRIPE 0.762 - 1.02μm IN SELECTED AREA
(2 SIDES) & 3.0μm MIN TIN IN SELECTED AREA
OVER 1.3 - 1.78μm NICKEL OVERALL.

4 - TYPE G
SELECTIVE GOLD PLATE. GOLD FLASH 0.05 - 0.10μm IN SELECTED AREA
AND 3.0μm MIN - 5.0μm MAX TIN IN SELECTED AREA
OVER 1.3 - 2.5μm NICKEL OVERALL.

UPDATE DRAWING
EC NO: S2014-0925
DRWN:ATSEE 2014/04/01
CHKD:FANNYWONG 2014/04/17
APPR:LBLEE 2014/04/10
DESCRIPTION
REV
AF

QUALITY SYMBOLS
F_A=0
F_C=0
F_P=0

GENERAL TOLERANCES (UNLESS SPECIFIED)

	mm	INCH
4 PLACES	± ---	± ---
3 PLACES	± ---	± .004
2 PLACES	± 0.10	± ---
1 PLACE	± ---	± ---
0 PLACE	±	±

ANGULAR ±1/2°

DRAFT WHERE APPLICABLE MUST REMAIN WITHIN DIMENSIONS

DIMENSION STYLE: MM/IN
SCALE: NTS
DESIGN UNITS: METRIC
THIRD ANGLE PROJECTION

DRAWN BY: KS DATE: 1987/10/30
CHECKED BY: BENRIGHT DATE: 2002/08/15
APPROVED BY: MLONG DATE: 2011/04/15

TITLE: C-GRID III SINGLE ROW STRAIGHT SHROUDED HEADER

molex

MATERIAL NO.: SEE TABLE
DOCUMENT NO.: SDA-90136
SHEET NO.: 3 OF 3
SIZE: A3

THIS DRAWING CONTAINS INFORMATION THAT IS PROPRIETARY TO MOLEX INCORPORATED AND SHOULD NOT BE USED WITHOUT WRITTEN PERMISSION