Lighting Contactors

Contents

Description *Page*

UL Rated AC Contactors
Product Family Overview
Product Description 5-2
Catalog Number Selection 5-3
Cover Control 5-4
Non-combination C30CN Electrically and Mechanically Held
Product Selection 5-5
Non-combination CN35 Electrically Held
Product Selection 5-6
Non-combination A202 Magnetically Latched
Product Selection 5-8
Combination Electrically Held and Magnetically Latched
Product Selection 5-10
Wiring Diagrams 5-11

Lighting Contactors

Product Description

Eaton's Cutler-Hammer® Lighting Contactors are designed to provide a safe, convenient means for local or remote switching of tungsten (incandescent filament) or ballast (fluorescent and mercury arc) lamp loads. They are also suitable for other loads such as low pressure and high pressure sodium lamp loads and other non-motor (resistive) loads. They are not recommended for most sign flashing loads.

These lighting contactors are designed to withstand the large initial inrush currents of tungsten lamp loads without contact welding. They are fully rated and do not require derating.

Application Description

Loads:

Ballast Lamps — Fluorescent, Mercury Vapor, Metal Halide Sodium Vapor, Quartz — 600V maximum.

Filament Lamps — Incandescent, Infrared, Heating — 480V maximum, line to line; 277V maximum line to neutral.

Resistance Heating — Radiant and convection heating, furnaces and ovens.

Standards and Certifications

Note: See **Page 18-2** for additional information on Standards and Certifications that apply to all Cutler-Hammer Enclosed Control products.

- UL Listed
- cUL Listed
- ABS Type Approved

Accessories

Auxiliary Contacts

C30CN Electrically Held Contactors — The base C30CN product line can accept up to four auxiliary contacts (2NO/2NC), which are mounted on the top of the unit. The auxiliary contacts, rated A600, are also suitable for use on low-level circuits down to 12V, 5 mA.

CN35 Electrically Held Contactors — Include a NO maintaining auxiliary contact mounted on the right side of the contactor. The 10 – 60A devices will accept additional auxiliary contacts on the top (front) and/or sides. The 100 – 400A sizes will accept side mounted auxiliaries only.

Mechanically Held and Magnetically Latched — Holding circuit auxiliary contact, if needed, is not included and should be added separately as an option.

Power Poles for C30CN

The C30CN can be configured with up to 12 poles (30A maximum per pole). Power poles are available in single or double pole designs and can be mounted to provide either normally open or normally closed operation with a maximum of 12 NO poles or 8 NC and 4 NO poles. Each pole is capable of accepting up to 8 AWG wire.

2-Wire or 3-Wire Control Module for C30CN

A mechanical latch with a 2- or 3-wire electronic control module delivers reliable performance and protection from such application abnormalities as line noise, leakage currents from controller outputs, or short repetitive commands burst from faulty controllers. For Enclosed Control, units come standard with 2-wire control.

IMPORTANT: Add the **C18** Modification code to get 3-wire control with the C30CN contactor.

Mechanically Held Kit for C30CN

A modification kit allows the conversion of an electrically held lighting contactor into a mechanically held contactor.

Coil Kits for C30CN

The C30CN line comes in a wide range of input voltages and with coils from 24V AC to 600V AC.

2-Wire Control Relay for A202

The 2-wire control relay is designed to field convert 3-wire magnetically latched lighting contactors to operate controls such as photocells and timers. Terminal blocks included for fast wiring installation.

Enclosed Lighting Contactors

Table 5-1. Type 1 2-Wire Control Relay

Description	Magnetic Coil Voltage	Type 1 Catalog Number	Type 3R Catalog Number
2-Wire Control Relay	120 208 240	**ECLC201A** **ECLC201E** **ECLC201B**	**ECLC202A** **ECLC202E** **ECLC202B**
	277 480	**ECLC201H** **ECLC201C**	**ECLC202H** **ECLC202C**

Catalog Number Selection

Table 5-2. Enclosed Lighting Contactor Catalog Numbering System

E C L 12 D 1 A 3 E - X

Design
L = CN35 or A202 Lighting Contactor
C = C30CN Lighting Contactor

Class		Table
03 =	Non-combination Electrically Held Lighting Contactor	**5-4, 5-6**
04 =	Non-combination Mechanically Held/ Magnetically Latched Lighting Contactor	**5-5, 5-7**
12 =	Combination Electrically Held Lighting Contactor — Fusible Disconnect	**5-8**
13 =	Combination Magnetically Latched Lighting Contactor — Fusible Disconnect	**5-8**
14 =	Combination Electrically Held Lighting Contactor — Thermal Magnetic Circuit Breaker	**5-9**
15 =	Combination Magnetically Latched Lighting Contactor — Thermal Magnetic Circuit Breaker	**5-9**

Ampere Size ②		
A = 10A	**D** = 60A	**G** = 300A
B = 20A	**E** = 100A	**H** = 400A
C = 30A	**F** = 200A	**J** = 600A

Enclosure Types
1 = Type 1 — General Purpose
2 = Type 3R — Rainproof
3 = Type 4 — Watertight (Painted)
4 = Type 4X — Watertight (304-Grade Stainless Steel)
6 = Type 7/9 — Explosion Proof
8 = Type 12 — Dust-Tight
9 = Type 4X — Watertight (316-Grade Stainless Steel)

Modification Codes
(See **Page 5-4** and **Page 16-40**)

Disconnect Fuse Clip Ratings	
A = None	**J** = 200A/600V R
B = 30A/250V R	**K** = 400A/250V R
C = 30A/600V R	**L** = 400A/600V R
D = 60A/250V R	**M** = 600A/250V R
E = 30A/600V R	**N** = 600A/600V R
F = 100A/250V R	**P** = 800A/600V R
G = 100A/600V R	**T** = By Description
H = 200A/250V R	

Thermal-Magnetic Breaker Ratings			
A = None	**F** = 60A	**J** = 300A	**M** = 800A
D = 20A	**G** = 100A	**K** = 400A	**T** = By Description
E = 30A	**H** = 200A	**L** = 600A	

Number of Poles ①
1, **2**, **3**, **4**, **5**, **6**, **7**, **8**, **9** = Poles Required
A = 10 Poles
B = 12 Poles
C = 20 Poles
Combination Devices = 3-Pole Only

Coil Voltage		
A = 120/60 110/50	**K** = 240/50	**T** = 24/60
B = 240/60 220/50	**L** = 380/50	**U** = 24/50
C = 480/60 440/50	**M** = 415/50	**V** = 32/50
D = 600/60 550/50	**P** = 12V DC	**W** = 48/60
E = 208/60	**Q** = 24V DC	**X** = 104 – 120/60
G = 550/50	**R** = 48V DC	**Y** = 48/50
H = 277/60	**S** = 125V DC	**Z** = By Description
J = 208 – 240/60		

① For normally closed poles see **Page 16-43**.
② C30CN available in 30A only.

Enclosures

Lighting contactors are available open or mounted in Type 1, 3R, 4, 4X, 12 or 7/9 enclosures.

Type 1 is for indoor, general purpose for personal protection. Knock-outs are provided in the top and bottom for conduit entry.

Type 3R is for outdoor applications and rated for rain, sleet and external ice buildup. Type 3R enclosures have knockouts in the bottom and provisions for a hub in the top.

Type 4 and 4X are for mounting indoor or outdoor and provide protection from splashing water, hose-directed water and wind-blown dust. Watertight conduit hubs are provided in the top and bottom of Type 4X enclosures. The standard Type 4X enclosures are made of 304-Grade stainless steel, providing corrosion protection. 316-Grade stainless steel construction is available as an upgrade option.

Type 12 enclosures are for indoor mounting and protect from dripping liquids, falling dirt and dust. No knockouts or hubs are provided with Type 12 enclosures.

Type 1, 3R, 4 and 12 enclosures are painted with a polyester urethane powder coat paint meeting UL requirements and the color is ANSI 61 gray. Type 1 enclosures have knockouts for cover controls. All the other Types have holes plugged, ready for cover controls. Type 7/9 is also available for explosion proof applications. Please contact the factory for additional details.

Cover Control

Table 5-3. Cover Mounted Pilot Devices

Description	For use with Lighting Contactor	Factory Installed Cover Control		Field Installation Kits	
		Type 1, 3R, 4X & 12	Type 7/9	Type 1 ①⑤	Type 3R, 4X, 12 Combination & Non-combination ②⑤
		Modification Code Suffix	Modification Code Suffix	Catalog Number	Catalog Number
ON/OFF Pushbuttons with Red RUN Pilot Light with Red RUN/GREEN off lights	Electrical 3-wire C30CN; CN35; A202	**P8** **P8P23** **P8P23P25**	**P8** **P8P23** **P8P23P25**	**C400GK18** **C400GK19_** **C400GK1A_**	**C400T2** **—** **—**
ON/OFF Pushbuttons with Red RUN Pilot Light with Red RUN/GREEN off lights	Mechanical 3-wire C30CN	**P8** **P8P23** **P8P23P25**	**P8** **P8P23** **P8P23P25**	**C400GK4** **C400GK48_** **C400GK49_**	**C400T201** **—** **—**
ON/OFF Pushbuttons with Red RUN Pilot Light with Red RUN/GREEN off lights	Elec. & Mech. 2-wire C30CN; CN35; A202	**P8** **P8P23** **P8P23P25**	**P8** **P8P23** **P8P23P25**	**C400GK5** **C400GK52_** **C400GK55_**	**C400T14** ③ **—** **—**
Start/Stop Pushbuttons with Red RUN Pilot Light with Red RUN/GREEN off lights	Mechanical 3-wire C30CN	**P7** **P7P23** **P7P23P25**	**P7** **P7P23** **P7P23P25**	**C400GK7** **C400GK72_** **C400GK75_**	**C400T200** **—** **—**
Start/Stop Pushbuttons with Red RUN Pilot Light with Red RUN/GREEN off lights	Elec. & Mech. 2-wire C30CN	**P7** **P7P23** **P7P23P25**	**P7** **P7P23** **P7P23P25**	**C400GK6** **C400GK62_** **C400GK65_**	**C400T13** ③ **—** **—**
HAND/OFF/AUTO Cover Control with Red RUN Pilot Light with Red RUN/GREEN off lights	Elec. & Mech. 2-wire C30CN; CN35; A202	**S3** **S3P23** **S3P23P25**	**S3** ④ **S3P23** ④ **S3P23P25** ④	**C400GK3** **C400GK32_** **C400GK35_**	**C400T12** ③ **—** **—**
Red RUN Pilot Light Green OFF Pilot Light Red RUN/Green OFF Pilot Light	All	**P23** **P25** **P23P25**	**P23** **P25** **P23P25**	**C400GK42_** **C400GK41_** **C400GK46_**	**C400T9_** **C400T10_** **C400T11_**

① For use with Non-combination units (Box sizes 1 – 4).
② For use with Type 1 Combination units as well.
③ Selector Switch.
④ With 3-position selector switch, Mod **C20** (2-wire control relay) must be used with magnetically latched contactor (ECL04, ECL13, ECL15).
⑤ Add Code Letter from table below to Catalog Number for Voltage in place of _.

Rating	Code Letter	Rating	Code Letter
24V 60 Hz	**T**	277V 60 Hz	**H**
120V 60 Hz	**A**	380V 60 Hz	**L**
208V 60 Hz	**E**	480V 60 Hz	**C**
240V 60 Hz	**B**	600V 60 Hz	**D**

Product Selection

2-Wire and 3-Wire Control Wiring Options — 2-Wire Control Standard

Enclosed Electrically Held Lighting Contactor

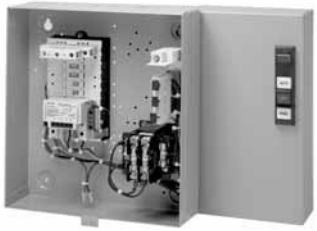

Enclosed Mechanically Held Lighting Contactor

Table 5-4. Class ECC03 — Non-combination Electrically Held Lighting Contactor — 2 or 3-Wire Control

Number of Poles	Type 1	Type 3R	Type 4X ①	Type 7/9	Type 12	Component Contactor (Open)
	Catalog Number ②	Catalog Number ②	Catalog Number ②	Catalog Number ②	Catalog Number ②	Catalog Number ②
Continuous Amps – 30						
2	ECC03C1_2A	ECC03C2_2A	ECC03C4_2A	ECC03C6_2A	ECC03C8_2A	C30CNE20_0
3	ECC03C1_3A	ECC03C2_3A	ECC03C4_3A	ECC03C6_3A	ECC03C8_3A	C30CNE30_0
4	ECC03C1_4A	ECC03C2_4A	ECC03C4_4A	ECC03C6_4A	ECC03C8_4A	C30CNE40_0
5	ECC03C1_5A	ECC03C2_5A	ECC03C4_5A	ECC03C6_5A	ECC03C8_5A	C30CNE50_0
6	ECC03C1_6A	ECC03C2_6A	ECC03C4_6A	ECC03C6_6A	ECC03C8_6A	C30CNE60_0
7	ECC03C1_7A	ECC03C2_7A	ECC03C4_7A	ECC03C6_7A	ECC03C8_7A	C30CNE70_0
8	ECC03C1_8A	ECC03C2_8A	ECC03C4_8A	ECC03C6_8A	ECC03C8_8A	C30CNE80_0
9	ECC03C1_9A	ECC03C2_9A	ECC03C4_9A	ECC03C6_9A	ECC03C8_9A	C30CNE90_0
10	ECC03C1_AA	ECC03C2_AA	ECC03C4_AA	ECC03C6_AA	ECC03C8_AA	C30CNE100_0
12	ECC03C1_BA	ECC03C2_BA	ECC03C4_BA	ECC03C6_BA	ECC03C8_BA	C30CNE120_0

① These are the Catalog Numbers for Type 4X 304-Grade Stainless Steel, as indicated by the seventh digit **4**. Example: ECC03C4A2A. To order Type 4X 316-Grade Stainless Steel, change that digit to **9**. To order Type 4 Painted Steel, change that digit to **3**. To order Nonmetallic, change that digit to **5**. For details on these Alternate Enclosures, see **Tab 14**.

② For first open position (Coil Voltage), use the table below.

Suffix	Coil Voltage	Suffix	Coil Voltage	Suffix	Coil Voltage
A	120/60 or 110/50	**D**	600/60 or 550/50	**T**	24/60
B	240/60 or 220/50	**E**	208/60	**V**	28/60 or 24/50
C	480/60 or 440/50	**H**	277/60 or 240/50	**X**	347/60

Table 5-5. Class ECC04 — Non-combination Mechanically Held Lighting Contactor — 2-Wire Control ③

Number of Poles	Type 1	Type 3R	Type 4X ④	Type 7/9	Type 12	Component Contactor (Open)
	Catalog Number ⑤	Catalog Number ⑤	Catalog Number ⑤	Catalog Number ⑤	Catalog Number ⑤	Catalog Number ⑤
Continuous Amps – 30						
2	ECC04C1_2A	ECC04C2_2A	ECC04C4_2A	ECC04C6_2A	ECC04C8_2A	C30CNM20_
3	ECC04C1_3A	ECC04C2_3A	ECC04C4_3A	ECC04C6_3A	ECC04C8_3A	C30CNM30_
4	ECC04C1_4A	ECC04C2_4A	ECC04C4_4A	ECC04C6_4A	ECC04C8_4A	C30CNM40_
5	ECC04C1_5A	ECC04C2_5A	ECC04C4_5A	ECC04C6_5A	ECC04C8_5A	C30CNM50_
6	ECC04C1_6A	ECC04C2_6A	ECC04C4_6A	ECC04C6_6A	ECC04C8_6A	C30CNM60_
7	ECC04C1_7A	ECC04C2_7A	ECC04C4_7A	ECC04C6_7A	ECC04C8_7A	C30CNM70_
8	ECC04C1_8A	ECC04C2_8A	ECC04C4_8A	ECC04C6_8A	ECC04C8_8A	C30CNM80_
9	ECC04C1_9A	ECC04C2_9A	ECC04C4_9A	ECC04C6_9A	ECC04C8_9A	C30CNM90_
10	ECC04C1_AA	ECC04C2_AA	ECC04C4_AA	ECC04C6_AA	ECC04C8_AA	C30CNM100_
12	ECC04C1_BA	ECC04C2_BA	ECC04C4_BA	ECC04C6_BA	ECC04C8_BA	C30CNM120_

③ Add **C18** Modification Code for 3-wire control.

④ These are the Catalog Numbers for Type 4X 304-Grade Stainless Steel, as indicated by the seventh digit **4**. Example: ECC04C4A2A. To order Type 4X 316-Grade Stainless Steel, change that digit to **9**. To order Type 4 Painted Steel, change that digit to **3**. To order Nonmetallic, change that digit to **5**. For details on these Alternate Enclosures, see **Tab 14**.

⑤ For first open position (Coil Voltage), use the table below.

Suffix	Coil Voltage	Suffix	Coil Voltage	Suffix	Coil Voltage
A	120/60 or 110/50	**D**	600/60 or 550/50	**T**	24/60
B	240/60 or 220/50	**E**	208/60	**V**	28/60 or 24/50
C	480/60 or 440/50	**H**	277/60 or 240/50	**X**	347/60

Note: To get the C30CN Lighting Contactor with normally closed power poles, see **Page 16-43**, section L, for Modification Codes.

Accessories ..... **Pages 5-2, 16-30**
Cover Control ..... **Page 5-4**
Dimensions ..... **Page 15-5**
Modifications ..... **Page 16-40**
Technical Data ..... **Page 18-37**

Product Selection

Table 5-6. Class ECL03 — Non-combination Electrically Held Lighting Contactor

No. of Poles	Frame Size	Type 1 General Purpose	Type 3R Rainproof	Type 4X ② Watertight & Dust-Tight Stainless Steel	Type 7/9 Hazardous Location	Type 12 Dust-Tight Industrial	Component Contactor (Open)
		Catalog Number ③	Catalog Number ③	Catalog Number ③	Catalog Number ③	Catalog Number ③	Catalog Number ③
Maximum Ampere Rating — 10 ①							
2	45 mm	ECL03A1_2A	ECL03A2_2A	ECL03A4_2A	ECL03A6_2A	ECL03A8_2A	CN35AN2_B
3		ECL03A1_3A	ECL03A2_3A	ECL03A4_3A	ECL03A6_3A	ECL03A8_3A	CN35AN3_B
4		ECL03A1_4A	ECL03A2_4A	ECL03A4_4A	ECL03A6_4A	ECL03A8_4A	CN35AN4_B
5		ECL03A1_5A	ECL03A2_5A	ECL03A4_5A	ECL03A6_5A	ECL03A8_5A	—
6		ECL03A1_6A	ECL03A2_6A	ECL03A4_6A	ECL03A6_6A	ECL03A8_6A	—
9	45 mm	ECL03A1_9A	ECL03A2_9A	ECL03A4_9A	ECL03A6_9A	ECL03A8_9A	—
10		ECL03A1_AA	ECL03A2_AA	ECL03A4_AA	ECL03A6_AA	ECL03A8_AA	—
12		ECL03A1_BA	ECL03A2_BA	ECL03A4_BA	ECL03A6_BA	ECL03A8_BA	—
20		ECL03A1_CA	ECL03A2_CA	ECL03A4_CA	ECL03A6_CA	ECL03A8_CA	—
Maximum Ampere Rating — 20 ①							
2	45 mm	ECL03B1_2A	ECL03B2_2A	ECL03B4_2A	ECL03B6_2A	ECL03B8_2A	CN35BN2_B
3		ECL03B1_3A	ECL03B2_3A	ECL03B4_3A	ECL03B6_3A	ECL03B8_3A	CN35BN3_B
4		ECL03B1_4A	ECL03B2_4A	ECL03B4_4A	ECL03B6_4A	ECL03B8_4A	CN35BN4_B
5		ECL03B1_5A	ECL03B2_5A	ECL03B4_5A	ECL03B6_5A	ECL03B8_5A	—
6		ECL03B1_6A	ECL03B2_6A	ECL03B4_6A	ECL03B6_6A	ECL03B8_6A	CN35BN6_B
9	45 mm	ECL03B1_9A	ECL03B2_9A	ECL03B4_9A	ECL03B6_9A	ECL03B8_9A	CN35BN9_B
10		ECL03B1_AA	ECL03B2_AA	ECL03B4_AA	ECL03B6_AA	ECL03B8_AA	—
12		ECL03B1_BA	ECL03B2_BA	ECL03B4_BA	ECL03B6_BA	ECL03B8_BA	CN35BN12_B
20		ECL03B1_CA	ECL03B2_CA	ECL03B4_CA	ECL03B6_CA	ECL03B8_CA	—
Maximum Ampere Rating — 30 ①							
2	45 mm	ECL03C1_2A	ECL03C2_2A	ECL03C4_2A	ECL03C6_2A	ECL03C8_2A	CN35DN2_B
3		ECL03C1_3A	ECL03C2_3A	ECL03C4_3A	ECL03C6_3A	ECL03C8_3A	CN35DN3_B
4		ECL03C1_4A	ECL03C2_4A	ECL03C4_4A	ECL03C6_4A	ECL03C8_4A	CN35DN4_B
5		ECL03C1_5A	ECL03C2_5A	ECL03C4_5A	ECL03C6_5A	ECL03C8_5A	CN35DN5_B
6		ECL03C1_6A	ECL03C2_6A	ECL03C4_6A	ECL03C6_6A	ECL03C8_6A	CN35DN6_B
9	45 mm	ECL03C1_9A	ECL03C2_9A	ECL03C4_9A	ECL03C6_9A	ECL03C8_9A	CN35DN9_B
10		ECL03C1_AA	ECL03C2_AA	ECL03C4_AA	ECL03C6_AA	ECL03C8_AA	—
12		ECL03C1_BA	ECL03C2_BA	ECL03C4_BA	ECL03C6_BA	ECL03C8_BA	CN35DN12_B
20		ECL03C1_CA	ECL03C2_CA	ECL03C4_CA	ECL03C6_CA	ECL03C8_CA	—
Maximum Ampere Rating — 60 ①							
2	65 mm	ECL03D1_2A	ECL03D2_2A	ECL03D4_2A	ECL03D6_2A	ECL03D8_2A	CN35GN2_B
3		ECL03D1_3A	ECL03D2_3A	ECL03D4_3A	ECL03D6_3A	ECL03D8_3A	CN35GN3_B
4		ECL03D1_4A	ECL03D2_4A	ECL03D4_4A	ECL03D6_4A	ECL03D8_4A	CN35GN4_B
5		ECL03D1_5A	ECL03D2_5A	ECL03D4_5A	ECL03D6_5A	ECL03D8_5A	CN35GN5_B
6	65 mm	ECL03D1_6A	ECL03D2_6A	ECL03D4_6A	ECL03D6_6A	ECL03D8_6A	—
9		ECL03D1_9A	ECL03D2_9A	ECL03D4_9A	ECL03D6_9A	ECL03D8_9A	—
10		ECL03D1_AA	ECL03D2_AA	ECL03D4_AA	ECL03D6_AA	ECL03D8_AA	—
12		ECL03D1_BA	ECL03D2_BA	ECL03D4_BA	ECL03D6_BA	ECL03D8_BA	—

① Ampere ratings are based on a maximum load voltage of 480V for tungsten lamp applications and 600V for ballast or mercury vapor type applications.

② These are the Catalog Numbers for Type 4X 304-Grade Stainless Steel, as indicated by the seventh digit **4**. Example: ECL03B4A2A. To order Type 4X 316-Grade Stainless Steel, change that digit to **9**. To order Type 4 Painted Steel, change that digit to **3**. To order Nonmetallic, change that digit to **5**. For details on these Alternate Enclosures, see **Tab 14**.

③ For open position (Coil Voltage), use the table below:

Suffix	Coil Voltage
A	120/60 or 110/50
B	240/60 or 220/50
C	480/60 or 440/50
D	600/60 or 550/50
E	208/60
H	277/60

Type 1 Electrically Held 4-Pole Lighting Contactor

Cover Control ..... **Page 5-4**
Dimensions ..... **Page 15-5**
Accessories ..... **Page 16-30**
Modifications ..... **Page 16-40**

Table 5-6. Class ECL03 — Non-combination Electrically Held Lighting Contactor (Continued)

No. of Poles	Frame Size	Type 1 General Purpose	Type 3R Rainproof	Type 4X ③ Watertight & Dust-Tight Stainless Steel	Type 7/9 Hazardous Location	Type 12 Dust-Tight Industrial	Component Contactor (Open)
		Catalog Number ④	Catalog Number ④	Catalog Number ④	Catalog Number ④	Catalog Number ④	Catalog Number ④
Maximum Ampere Rating — 100 ①							
2 3 4	90 mm	ECL03E1_2A ECL03E1_3A ECL03E1_4A	ECL03E2_2A ECL03E2_3A ECL03E2_4A	ECL03E4_2A ECL03E4_3A ECL03E4_4A	ECL03E6_2A ECL03E6_3A ECL03E6_4A	ECL03E8_2A ECL03E8_3A ECL03E8_4A	CN35KN2_ CN35KN3_ —
5 6 9	90 mm	ECL03E1_5A ECL03E1_6A ECL03E1_9A	ECL03E2_5A ECL03E2_6A ECL03E2_9A	ECL03E4_5A ECL03E4_6A ECL03E4_9A	ECL03E6_5A ECL03E6_6A ECL03E6_9A	ECL03E8_5A ECL03E8_6A ECL03E8_9A	— — —
Maximum Ampere Rating — 200 ①							
2 3 4	180 mm	ECL03F1_2A ECL03F1_3A ECL03F1_4A	ECL03F2_2A ECL03F2_3A ECL03F2_4A	ECL03F4_2A ECL03F4_3A ECL03F4_4A	ECL03F6_2A ECL03F6_3A ECL03F6_4A	ECL03F8_2A ECL03F8_3A ECL03F8_4A	CN35NN2_ CN35NN3_ —
5 6	180 mm	ECL03F1_5A ECL03F1_6A	ECL03F2_5A ECL03F2_6A	ECL03F4_5A ECL03F4_6A	ECL03F6_5A ECL03F6_6A	ECL03F8_5A ECL03F8_6A	— —
Maximum Ampere Rating — 300 ①							
2 3 4	180 mm	ECL03G1_2A ECL03G1_3A ECL03G1_4A	ECL03G2_2A ECL03G2_3A ECL03G2_4A	ECL03G4_2A ECL03G4_3A ECL03G4_4A	ECL03G6_2A ECL03G6_3A ECL03G6_4A	ECL03G8_2A ECL03G8_3A ECL03G8_4A	CN35SN2_ CN35SN3_ —
5 6	180 mm	ECL03G1_5A ECL03G1_6A	ECL03G2_5A ECL03G2_6A	ECL03G4_5A ECL03G4_6A	ECL03G6_5A ECL03G6_6A	ECL03G8_5A ECL03G8_6A	— —
Maximum Ampere Rating — 400 ①②							
2 3	220 mm	ECL03H1_2A ECL03H1_3A	ECL03H2_2A ECL03H2_3A	ECL03H4_2A ECL03H4_3A	ECL03H6_2A ECL03H6_3A	ECL03H8_2A ECL03H8_3A	CN35TN2_ CN35TN3_

① Ampere ratings are based on a maximum load voltage of 480V for tungsten lamp applications and 600V for ballast or mercury vapor type applications.

② UL ballast and resistive ratings only.

③ These are the Catalog Numbers for Type 4X 304-Grade Stainless Steel, as indicated by the seventh digit **4**. Example: ECL03B**4**A2A. To order Type 4X 316-Grade Stainless Steel, change that digit to **9**. To order Type 4 Painted Steel, change that digit to **3**. To order Nonmetallic, change that digit to **5**. For details on these Alternate Enclosures, see **Tab 14**.

④ For open position (Coil Voltage), use the table below:

Suffix	Coil Voltage
A B C	120/60 or 110/50 240/60 or 220/50 480/60 or 440/50
D E H	600/60 or 550/50 208/60 277/60

Cover Control . . . . . **Page 5-4**
Dimensions . . . . . **Page 15-5**
Accessories . . . . . **Page 16-30**
Modifications . . . . . **Page 16-40**

Operation

A permanent magnet is built into the contactor structure that will maintain the contactor in its energized state indefinitely without using control power. When energized, a DC current is applied to the latch coil, producing a magnetic field that reinforces the polarity of the permanent magnet, pulling in the contactor. The current to the coil is disconnected by the coil clearing interlock. In order to drop out the contactor, it is necessary to apply a field through the STOP coil in the reverse direction to the permanent magnet. This momentarily cancels the magnetic attraction and the contactor drops out.

Product Selection

Table 5-7. Class ECL04 — Non-combination Magnetically Latched Lighting Contactor

No. of Poles	Type 1 General Purpose	Type 3R Rainproof	Type 4X ② Watertight & Dust-Tight Stainless Steel	Type 7/9 Hazardous Location	Type 12 Dust-Tight Industrial	Component Contactor (Open)
	Catalog Number ③	Catalog Number ③	Catalog Number ③	Catalog Number ③	Catalog Number ③	Catalog Number ③
Maximum Ampere Rating — 30 ①						
2	ECL04C1_2A	ECL04C2_2A	ECL04C4_2A	ECL04C6_2A	ECL04C8_2A	A202K1B_M
3	ECL04C1_3A	ECL04C2_3A	ECL04C4_3A	ECL04C6_3A	ECL04C8_3A	A202K1C_M
4	ECL04C1_4A	ECL04C2_4A	ECL04C4_4A	ECL04C6_4A	ECL04C8_4A	A202K1D_M
5	ECL04C1_5A	ECL04C2_5A	ECL04C4_5A	ECL04C6_5A	ECL04C8_5A	A202K1E_M
6	ECL04C1_6A	ECL04C2_6A	ECL04C4_6A	ECL04C6_6A	ECL04C8_6A	A202K1F_M
8	ECL04C1_8A	ECL04C2_8A	ECL04C4_8A	ECL04C6_8A	ECL04C8_8A	A202K1G_M
9	ECL04C1_9A	ECL04C2_9A	ECL04C4_9A	ECL04C6_9A	ECL04C8_9A	—
10	ECL04C1_AA	ECL04C2_AA	ECL04C4_AA	ECL04C6_AA	ECL04C8_AA	A202K1H_M
12	ECL04C1_BA	ECL04C2_BA	ECL04C4_BA	ECL04C6_BA	ECL04C8_BA	A202K1K_M
20	ECL04C1_CA	ECL04C2_CA	ECL04C4_CA	ECL04C6_CA	ECL04C8_CA	—
Maximum Ampere Rating — 60 ①						
2	ECL04D1_2A	ECL04D2_2A	ECL04D4_2A	ECL04D6_2A	ECL04D8_2A	A202K2B_M
3	ECL04D1_3A	ECL04D2_3A	ECL04D4_3A	ECL04D6_3A	ECL04D8_3A	A202K2C_M
4	ECL04D1_4A	ECL04D2_4A	ECL04D4_4A	ECL04D6_4A	ECL04D8_4A	A202K2D_M
5	ECL04D1_5A	ECL04D2_5A	ECL04D4_5A	ECL04D6_5A	ECL04D8_5A	A202K2E_M
6	ECL04D1_6A	ECL04D2_6A	ECL04D4_6A	ECL04D6_6A	ECL04D8_6A	A202K2F_M
8	ECL04D1_8A	ECL04D2_8A	ECL04D4_8A	ECL04D6_8A	ECL04D8_8A	A202K2G_M
9	ECL04D1_9A	ECL04D2_9A	ECL04D4_9A	ECL04D6_9A	ECL04D8_9A	—
10	ECL04D1_AA	ECL04D2_AA	ECL04D4_AA	ECL04D6_AA	ECL04D8_AA	A202K2H_M
12	ECL04D1_BA	ECL04D2_BA	ECL04D4_BA	ECL04D6_BA	ECL04D8_BA	A202K2K_M
20	ECL04D1_CA	ECL04D2_CA	ECL04D4_CA	ECL04D6_CA	ECL04D8_CA	—
Maximum Ampere Rating — 100 ①						
2	ECL04E1_2A	ECL04E2_2A	ECL04E4_2A	ECL04E6_2A	ECL04E8_2A	A202K3B_M
3	ECL04E1_3A	ECL04E2_3A	ECL04E4_3A	ECL04E6_3A	ECL04E8_3A	A202K3C_M
4	ECL04E1_4A	ECL04E2_4A	ECL04E4_4A	ECL04E6_4A	ECL04E8_4A	A202K3D_M
5	ECL04E1_5A	ECL04E2_5A	ECL04E4_5A	ECL04E6_5A	ECL04E8_5A	A202K3E_M
6	ECL04E1_6A	ECL04E2_6A	ECL04E4_6A	ECL04E6_6A	ECL04E8_6A	A202K3F_M
8	ECL04E1_8A	ECL04E2_8A	ECL04E4_8A	ECL04E6_8A	ECL04E8_8A	A202K3G_M
9	ECL04E1_9A	ECL04E2_9A	ECL04E4_9A	ECL04E6_9A	ECL04E8_9A	—
10	ECL04E1_AA	ECL04E2_AA	ECL04E4_AA	ECL04E6_AA	ECL04E8_AA	A202K3H_M
12	ECL04E1_BA	ECL04E2_BA	ECL04E4_BA	ECL04E6_BA	ECL04E8_BA	A202K3K_M
20	ECL04E1_CA	ECL04E2_CA	ECL04E4_CA	ECL04E6_CA	ECL04E8_CA	—

① Ampere ratings are based on a maximum load voltage of 480V for tungsten lamp applications and 600V for ballast or mercury vapor type applications.

② These are the Catalog Numbers for Type 4X 304-Grade Stainless Steel, as indicated by the seventh digit **4**. Example: ECL04C**4**A2A. To order Type 4X 316-Grade Stainless Steel, change that digit to **9**. To order Type 4 Painted Steel, change that digit to **3**. To order Nonmetallic, change that digit to **5**. For details on these Alternate Enclosures, see **Tab 14**.

③ For open position (Coil Voltage), use the table below:

Enclosed Suffix	Open Suffix	Coil Voltage
A	A	120/60 or 110/50
B	W	240/60 or 220/50
C	X	480/60 or 440/50
D	E	600/60
E	B	208/60
H	Z	277/60

Type 1 Non-combination Magnetically Latched Lighting Contactor

Accessories ..... **Pages 5-2, 16-34**
Cover Control ..... **Page 5-4**
Dimensions ..... **Page 15-5**
Modifications ..... **Page 16-40**
Technical Data ..... **Page 18-37**

Table 5-7. Class ECL04 — Non-combination Magnetically Latched Lighting Contactor (Continued)

No. of Poles	Type 1 General Purpose	Type 3R Rainproof	Type 4X ② Watertight & Dust-Tight Stainless Steel	Type 7/9 Hazardous Location	Type 12 Dust-Tight Industrial	Component Contactor (Open)
	Catalog Number ③	Catalog Number ③	Catalog Number ③	Catalog Number ③	Catalog Number ③	Catalog Number ③
Maximum Ampere Rating — 200 ①						
2	ECL04F1_2A	ECL04F2_2A	ECL04F4_2A	ECL04F6_2A	ECL04F8_2A	A202K4B_M
3	ECL04F1_3A	ECL04F2_3A	ECL04F4_3A	ECL04F6_3A	ECL04F8_3A	A202K4C_M
4	ECL04F1_4A	ECL04F2_4A	ECL04F4_4A	ECL04F6_4A	ECL04F8_4A	A202K4D_M
5	ECL04F1_5A	ECL04F2_5A	ECL04F4_5A	ECL04F6_5A	ECL04F8_5A	A202K4E_M
6	ECL04F1_6A	ECL04F2_6A	ECL04F4_6A	ECL04F6_6A	ECL04F8_6A	A202K4F_M
8	ECL04F1_8A	ECL04F2_8A	ECL04F4_8A	ECL04F6_8A	ECL04F8_8A	A202K4G_M
9	ECL04F1_9A	ECL04F2_9A	ECL04F4_9A	ECL04F6_9A	ECL04F8_9A	—
10	ECL04F1_AA	ECL04F2_AA	ECL04F4_AA	ECL04F6_AA	ECL04F8_AA	A202K4H_M
12	ECL04F1_BA	ECL04F2_BA	ECL04F4_BA	ECL04F6_BA	ECL04F8_BA	A202K4K_M
20	ECL04F1_CA	ECL04F2_CA	ECL04F4_CA	ECL04F6_CA	ECL04F8_CA	—
Maximum Ampere Rating — 300 ①						
2	ECL04G1_2A	ECL04G2_2A	ECL04G4_2A	ECL04G6_2A	ECL04G8_2A	A202K5B_M
3	ECL04G1_3A	ECL04G2_3A	ECL04G4_3A	ECL04G6_3A	ECL04G8_3A	A202K5C_M
4	ECL04G1_4A	ECL04G2_4A	ECL04G4_4A	ECL04G6_4A	ECL04G8_4A	—
5	ECL04G1_5A	ECL04G2_5A	ECL04G4_5A	ECL04G6_5A	ECL04G8_5A	—
6	ECL04G1_6A	ECL04G2_6A	ECL04G4_6A	ECL04G6_6A	ECL04G8_6A	—
Maximum Ampere Rating — 400 ①						
2	ECL04H1_2A	ECL04H2_2A	ECL04H4_2A	ECL04H6_2A	ECL04H8_2A	A202K6B_M
3	ECL04H1_3A	ECL04H2_3A	ECL04H4_3A	ECL04H6_3A	ECL04H8_3A	A202K6C_M
4	ECL04H1_4A	ECL04H2_4A	ECL04H4_4A	ECL04H6_4A	ECL04H8_4A	—
5	ECL04H1_5A	ECL04H2_5A	ECL04H4_5A	ECL04H6_5A	ECL04H8_5A	—
6	ECL04H1_6A	ECL04H2_6A	ECL04H4_6A	ECL04H6_6A	ECL04H8_6A	—

① Ampere ratings are based on a maximum load voltage of 480V for tungsten lamp applications and 600V for ballast or mercury vapor type applications.

② These are the Catalog Numbers for Type 4X 304-Grade Stainless Steel, as indicated by the seventh digit **4**. Example: ECL04C4A2A. To order Type 4X 316-Grade Stainless Steel, change that digit to **9**. To order Type 4 Painted Steel, change that digit to **3**. To order Nonmetallic, change that digit to **5**. For details on these Alternate Enclosures, see **Tab 14**.

③ For open position (Coil Voltage), use the table below:

Enclosed Suffix	Open Suffix	Coil Voltage
A	A	120/60 or 110/50
B	W	240/60 or 220/50
C	X	480/60 or 440/50
D	E	600/60
E	B	208/60
H	Z	277/60

Accessories ..... **Pages 5-2, 16-34**
Cover Control ..... **Page 5-4**
Dimensions ..... **Page 15-5**
Modifications ..... **Page 16-40**
Technical Data ..... **Page 18-37**

Product Selection

Table 5-8. Class ECL12 & ECL13 — Combination Lighting Contactor — Fusible Disconnect

Max. Amp Rating ①	No. of Poles	Fuse Clips Amps/Volts ③	Type 1 General Purpose	Type 3R Rainproof	Type 4X Watertight & Dust-Tight SS	Type 7/9 Hazardous Location	Type 12 Dust-Tight Industrial	Component Contactor (Open)
			Catalog Number ②	Catalog Number ②	Catalog Number ②	Catalog Number ②	Catalog Number ②	Catalog Number ②
Electrically Held — Class ECL12								
30	3	30/250V 30/600V	ECL12C1_3B ECL12C1_3C	ECL12C2_3B ECL12C2_3C	ECL12C4_3B ECL12C4_3C	ECL12C6_3B ECL12C6_3C	ECL12C8_3B ECL12C8_3C	CN35DN3_B
60	3	60/250V 60/600V	ECL12D1_3D ECL12D1_3E	ECL12D2_3D ECL12D2_3E	ECL12D4_3D ECL12D4_3E	ECL12D6_3D ECL12D6_3E	ECL12D8_3D ECL12D8_3E	CN35GN3_B
100	3	100/250V 100/600V	ECL12E1_3F ECL12E1_3G	ECL12E2_3F ECL12E2_3G	ECL12E4_3F ECL12E4_3G	ECL12E6_3F ECL12E6_3G	ECL12E8_3F ECL12E8_3G	CN35KN3_
200	3	200/250V 200/600V	ECL12F1_3H ECL12F1_3J	ECL12F2_3H ECL12F2_3J	ECL12F4_3H ECL12F4_3J	ECL12F6_3H ECL12F6_3J	ECL12F8_3H ECL12F8_3J	CN35NN3_
300	3	400/250V 400/600V	ECL12G1_3K ECL12G1_3L	ECL12G2_3K ECL12G2_3L	ECL12G4_3K ECL12G4_3L	ECL12G6_3K ECL12G6_3L	ECL12G8_3K ECL12G8_3L	CN35SN3_
400	3	400/250V 400/600V	ECL12H1_3K ECL12H1_3L	ECL12H2_3K ECL12H2_3L	ECL12H4_3K ECL12H4_3L	ECL12H6_3K ECL12H6_3L	ECL12H8_3K ECL12H8_3L	CN35TN3_
Magnetically Latched — Class ECL13								
30	3	30/250V 30/600V	ECL13C1_3B ECL13C1_3C	ECL13C2_3B ECL13C2_3C	ECL13C4_3B ECL13C4_3C	ECL13C6_3B ECL13C6_3C	ECL13C8_3B ECL13C8_3C	A202K1C_M
60	3	60/250V 60/600V	ECL13D1_3D ECL13D1_3E	ECL13D2_3D ECL13D2_3E	ECL13D4_3D ECL13D4_3E	ECL13D6_3D ECL13D6_3E	ECL13D8_3D ECL13D8_3E	A202K2C_M
100	3	100/250V 100/600V	ECL13E1_3F ECL13E1_3G	ECL13E2_3F ECL13E2_3G	ECL13E4_3F ECL13E4_3G	ECL13E6_3F ECL13E6_3G	ECL13E8_3F ECL13E8_3G	A202K3C_M
200	3	200/250V 200/600V	ECL13F1_3H ECL13F1_3J	ECL13F2_3H ECL13F2_3J	ECL13F4_3H ECL13F4_3J	ECL13F6_3H ECL13F6_3J	ECL13F8_3H ECL13F8_3J	A202K4C_M

① The listed ampere ratings are based on a maximum load voltage of 480V for tungsten lamp applications and 600V for ballasts or mercury vapor type applications.

② The underscore (_) indicates missing Code letter for Coil Selection — see **Table 5-10**. Example: Magnet coils with 120/110V coils — change 8th character to **A**. ECL12C1**A**3B.

③ Power fuses are not included.

Table 5-9. Class ECL14 & ECL15 — Combination Lighting Contactor — Thermal Magnetic Circuit Breaker

Max. Amp Rating ④	No. of Poles	Continuous Ampere Rating @ 40°C	Type 1 General Purpose	Type 3R Rainproof	Type 4X Watertight & Dust-Tight SS	Type 7/9 Hazardous Location	Type 12 Dust-Tight Industrial	Component Contactor (Open)
			Catalog Number ⑤	Catalog Number ⑤	Catalog Number ⑤	Catalog Number ⑤	Catalog Number ⑤	Catalog Number ⑤
Electrically Held — Class ECL14								
30 60 100	3	30 60 100	ECL14C1_3E ECL14D1_3F ECL14E1_3G	ECL14C2_3E ECL14D2_3F ECL14E2_3G	ECL14C4_3E ECL14D4_3F ECL14E4_3G	ECL14C6_3E ECL14D6_3F ECL14E6_3G	ECL14C8_3E ECL14D8_3F ECL14E8_3G	CN35DN3_B CN35GN3_B CN35KN3_
200 300 400	3	200 300 400	ECL14F1_3H ECL14G1_3J ECL14H1_3K	ECL14F2_3H ECL14G2_3J ECL14H2_3K	ECL14F4_3H ECL14G4_3J ECL14H4_3K	ECL14F6_3H ECL14G6_3J ECL14H6_3K	ECL14F8_3H ECL14G8_3J ECL14H8_3K	CN35NN3_ CN35SN3_ CN35TN3_
Magnetically Latched — Class ECL15								
30 60 100 200	3	30 60 100 200	ECL15C1_3E ECL15D1_3F ECL15E1_3G ECL15F1_3H	ECL15C2_3E ECL15D2_3F ECL15E2_3G ECL15F2_3H	ECL15C4_3E ECL15D4_3F ECL15E4_3G ECL15F4_3H	ECL15C6_3E ECL15D6_3F ECL15E6_3G ECL15F6_3H	ECL15C8_3E ECL15D8_3F ECL15E8_3G ECL15F8_3H	A202K1C_M A202K2C_M A202K3C_M A202K4C_M

④ The listed ampere ratings are based on a maximum load voltage of 480V for tungsten lamp applications and 600V for ballasts or mercury vapor type applications.

⑤ The underscore (_) indicates missing Code letter for Coil Selection — see **Table 5-10**. Example: Magnet coils with 120/110V coils — change 8th character to **A**. ECL12C1**A**3B.

Table 5-10. Coil Voltage

Rating	Code Letter	Rating	Code Letter	Rating	Code Letter
120V 60 Hz	**A**	240V 60 Hz	**B**	480V 60 Hz	**C**
208V 60 Hz	**E**	277V 60 Hz	**H**	600V 60 Hz	**D**

Note: The Catalog Numbers listed in the Type 4X column are for Type 4X 304-Grade Stainless Steel, as indicated by the seventh digit **4**. Example: ECL12C**4**A3B. To order Type 4X 316-Grade Stainless Steel, change that digit to **9**. To order Type 4 Painted Steel, change that digit to **3**. To order Nonmetallic, change that digit to **5**. For details on these Alternate Enclosures, see **Tab 14**.

Additional Common Modifications are available for outside lighting for ballfields, parks, etc.:

- **E7** — Service Entrance
- **E5** — Enclosure with pole mounting brackets
- **P70** — Photocell
- **T1 – T25** — Timers

See **Page 16-40** for details.

Accessories —
Magnetically Held ..... **Page 5-2, Page 16-34**
Cover Control ..... **Page 5-4**
Dimensions ..... **Page 15-5**
Accessories —
Electrically Held ..... **Page 16-30**
Modifications ..... **Page 16-40**

Wiring Diagrams

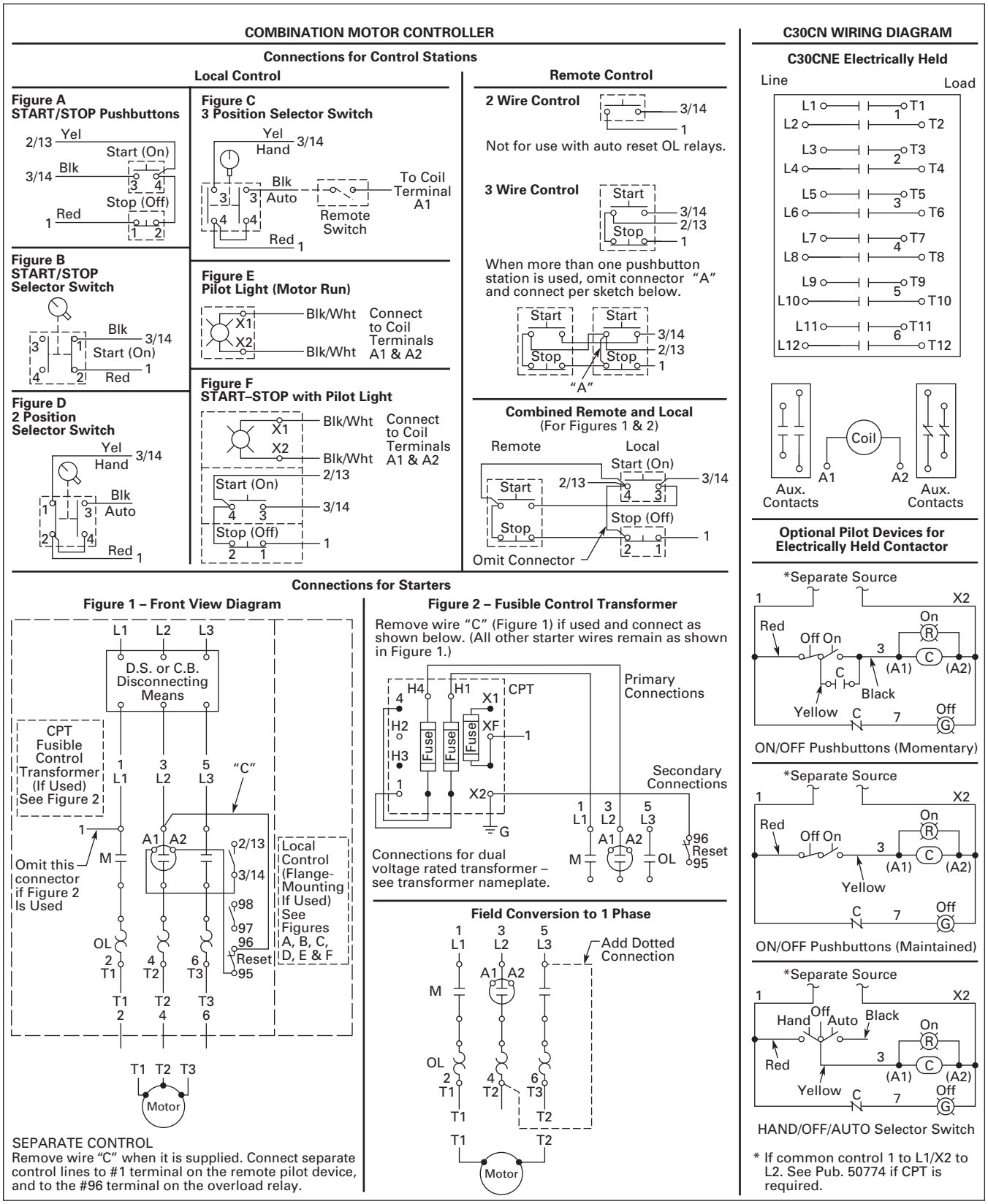

Figure 5-1. Typical Wiring Diagram — C30CN

30-200 Amp L04 Contactor 2 – 12 Pole

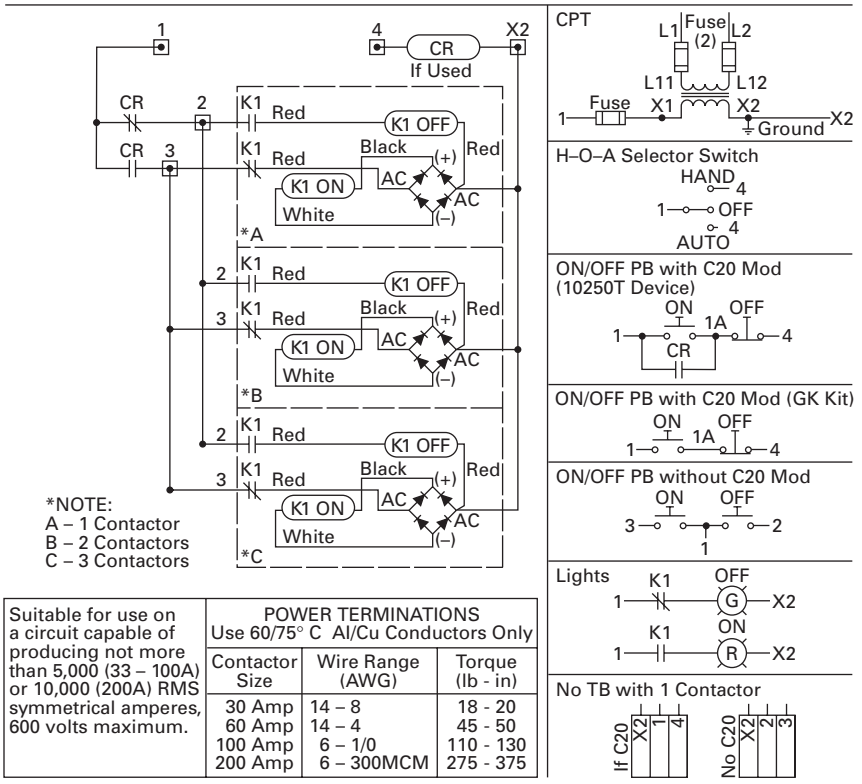

Suitable for use on a circuit capable of producing not more than 5,000 (33 – 100A) or 10,000 (200A) RMS symmetrical amperes, 600 volts maximum.	POWER TERMINATIONS Use 60/75° C Al/Cu Conductors Only		
	Contactor Size	Wire Range (AWG)	Torque (lb - in)
	30 Amp	14 – 8	18 - 20
	60 Amp	14 – 4	45 - 50
	100 Amp	6 – 1/0	110 - 130
	200 Amp	6 – 300MCM	275 - 375

Figure 5-2. Typical Wiring Diagram — Magnetically Latched

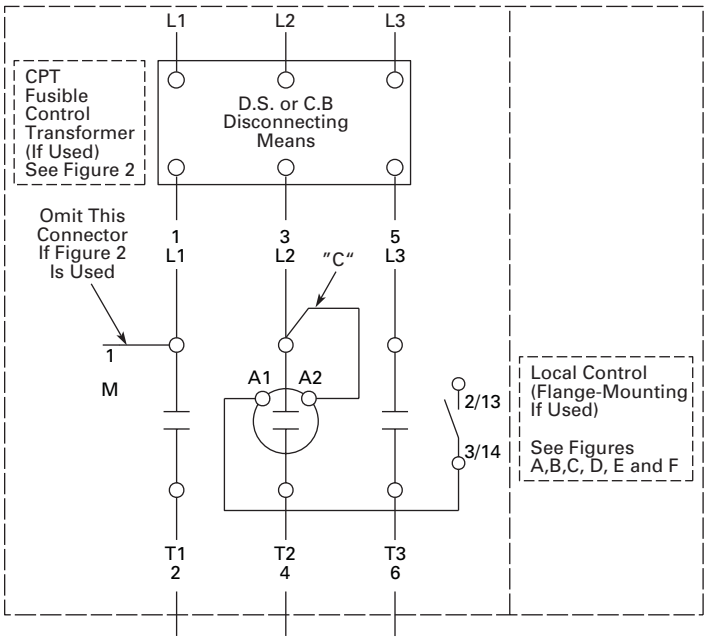

Front View Diagram
Figure 1

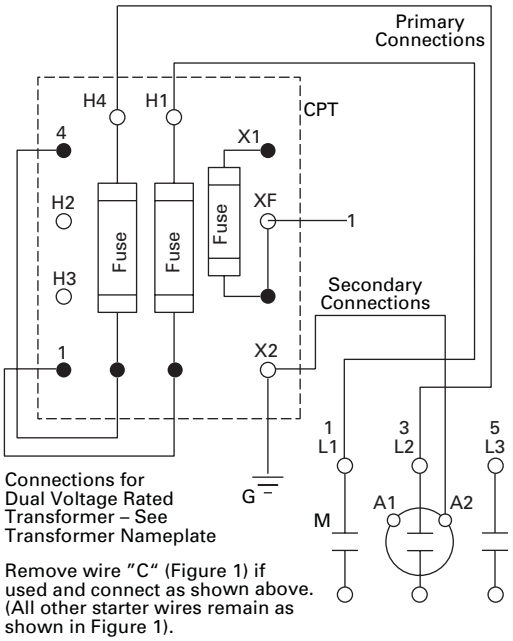

Fusible Control Transformer
Figure 2

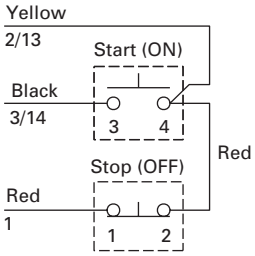

START/STOP Pushbuttons
Figure A

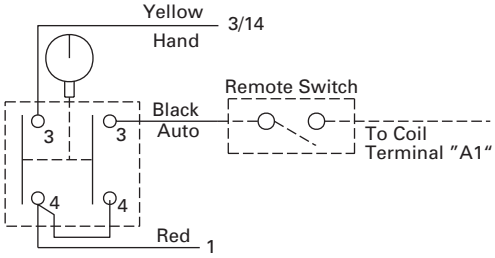

3-Position Selector Switch
Figure C

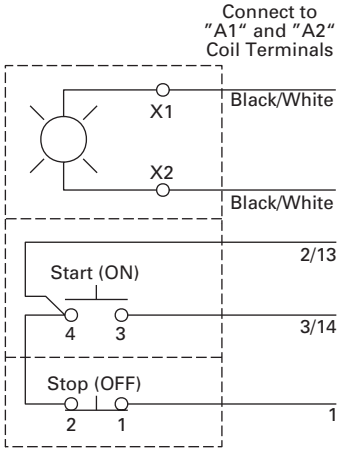

STOP/START with Pilot Light
Figure F

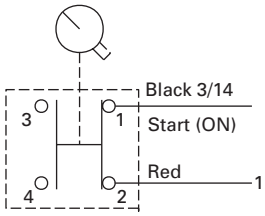

START/STOP Selector Switch
Figure B

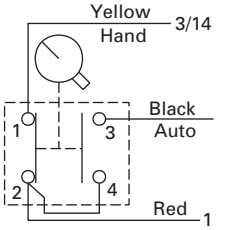

2-Position Selector Switch
Figure D

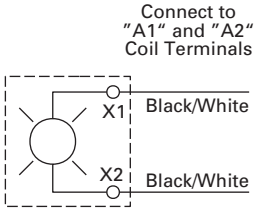

Pilot Light (Motor RUN)
Figure E

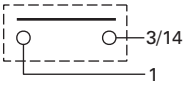

Not for use with
auto reset OL relays.

2-Wire Control

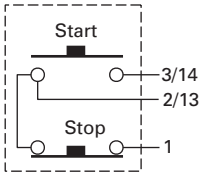

3-Wire Control

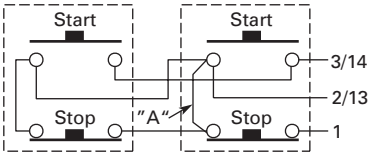

Remote Control

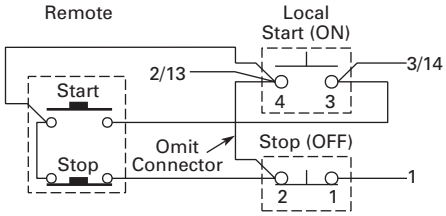

For Figures 1 and 2
Combined Remote and Local

260880 D4

Figure 5-3. Electrically Held Combination Contactors — CN35

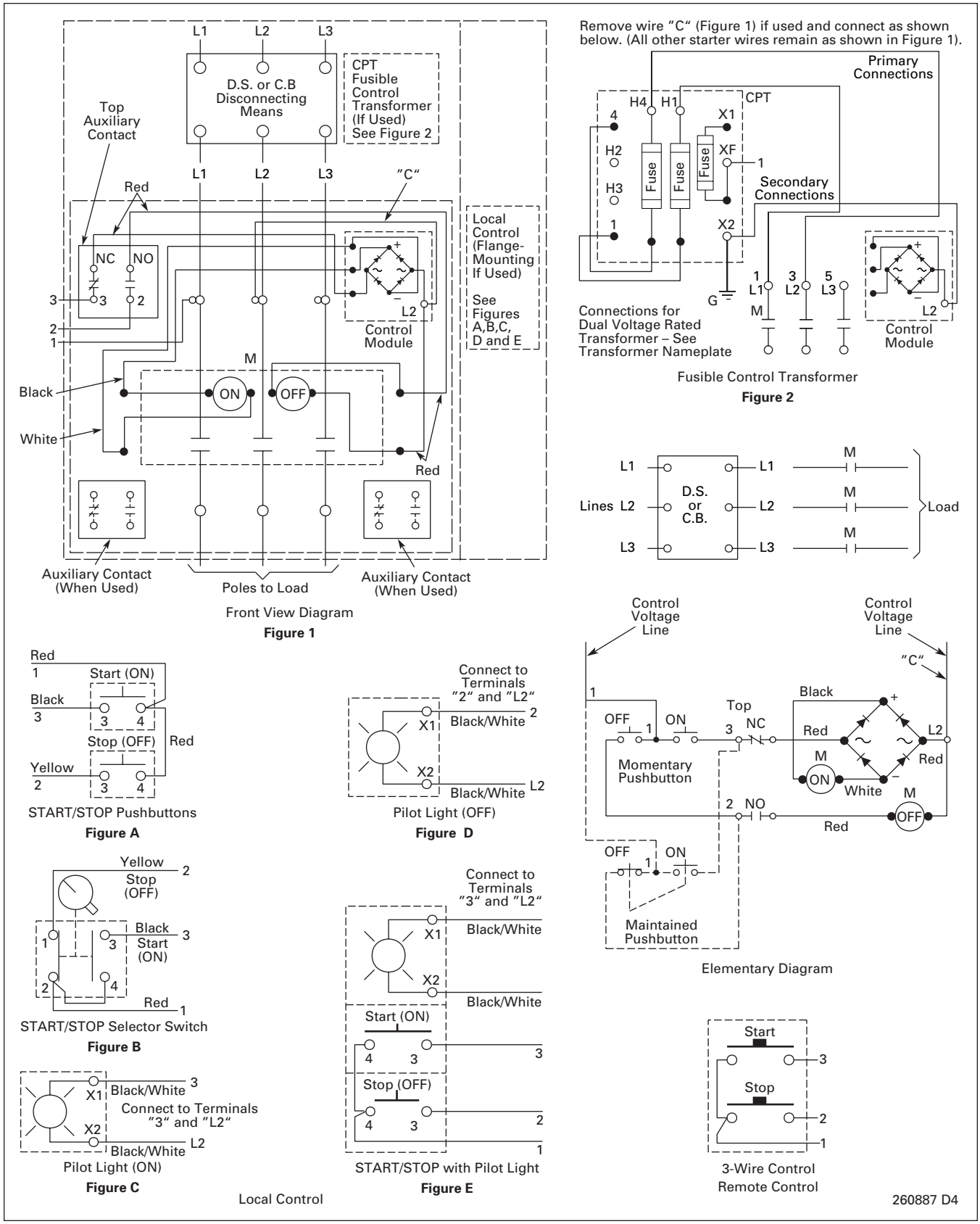

Figure 5-4. Magnetically Latched Combination Contactors