THIS DRAWING IS UNPUBLISHED. RELEASED FOR PUBLICATION -,- .
© COPYRIGHT - By - ALL RIGHTS RESERVED.

REVISIONS

| P | LTR | DESCRIPTION | DATE | DWN | APVD |
|---|---|---|---|---|---|
| | R1 | REVISED PER ECO-11-004917 | 11MAR11 | RK | HMR |
| | R2 | REVISED PER ECO-17-006294 | 09OCT2017 | RS | DR |

1 FOR ø7.92 [ø.312] MAX WIRE INSULATION.

2 NOTE DELETED.

3 MATERIAL: BODY; COPPER PER ASTM B152
INSULATION; PVC
COLOR; PURPLE

4 FINISH: BODY; TIN PLATE PER ASTM B-545

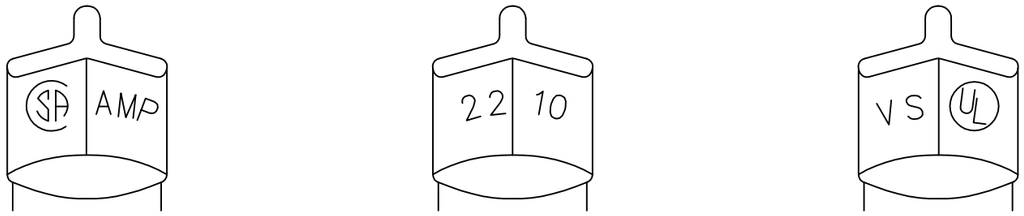


STAMPING DETAIL

| AMP WIRE RANGE | UL Listed | CSA LR7189 Certified |
|---|---|---|
| 22-10 AWG SOLID OR STRANDED | 22-10 AWG SOLID OR STRANDED | 22-10 AWG SOLID OR STRANDED |

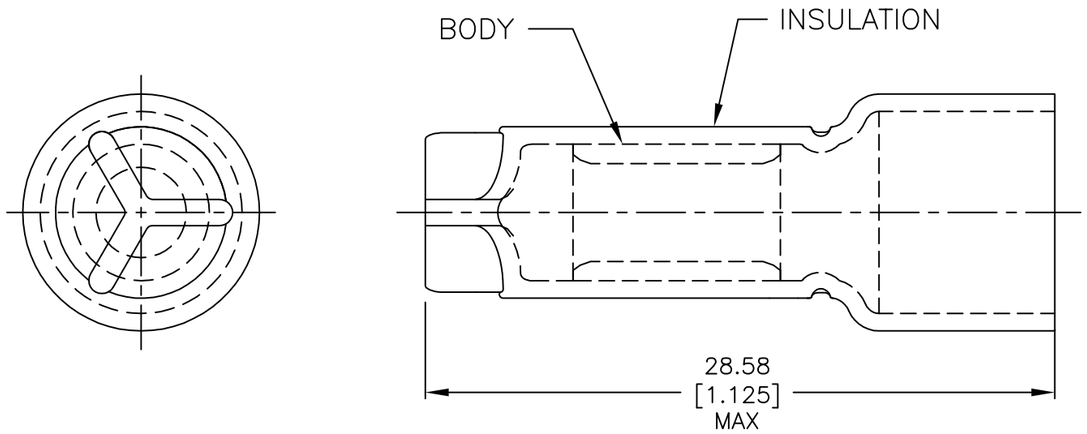


| | | |
|---|---|---|
| 1,500 | TAPE MOUNTED | 1-36965-1 |
| 500 | LOOSE PIECE | 36965 |
| QTY | DESCRIPTION | PART NO |

AMP INCORPORATED
CUSTOMER SERVICE SYSTEMS

| | |
|---|---|
| FOR ADDITIONAL PRODUCT INFORMATION OR COPIES OF DRAWINGS AND TECHNICAL DOCUMENTS | PRODUCT INFORMATION CENTER 1-800-522-6752 |
| FOR APPLICATION TOOLING INFORMATION | TOOLING ASSISTANCE CENTER 1-800-722-1111 |
| FOR ORDER ENTRY | 1-800-526-5142 |

THIS DRAWING IS A CONTROLLED DOCUMENT FOR AMP INCORPORATED. IT IS SUBJECT TO CHANGE AND THE CONTROLLING ENGINEERING ORGANIZATION SHOULD BE CONTACTED FOR THE LATEST REVISION.

MAX RECOMMENDED OPERATING TEMPERATURE: 90°C[194°F] MAX

VOLTAGE RATING: 300V MAX

CIRCULAR MIL AREA: 1.65-6.64mm²[3248-13100] SOLID OR STRANDED

THIS DRAWING IS A CONTROLLED DOCUMENT.

DIMENSIONS: mm [INCHES]

TOLERANCES UNLESS OTHERWISE SPECIFIED:
0 PLC ± -
1 PLC ± -
2 PLC ± 0.20[.008]
3 PLC ± -
4 PLC ± -
ANGLES ± -

MATERIAL 3

FINISH 4

| | | |
|---|---|---|
| DWN | G KRUPER | 1/93 |
| CHK | R HERSEY | 1/93 |
| APVD | M ELLIS | 1/93 |
| PRODUCT SPEC | — | |
| APPLICATION SPEC | — | |
| WEIGHT | — | |

TE Connectivity

NAME: SPLICE, WIRE, CLOSED END 22-10 AWG

| SIZE | CAGE CODE | DRAWING NO | RESTRICTED TO |
|---|---|---|---|
| A3 | 00779 | C-36965 | — |

CUSTOMER DRAWING | SCALE 4:1 | SHEET 1 OF 1 | REV R2

1470-19 (1/15)