THIS DRAWING IS UNPUBLISHED. RELEASED FOR PUBLICATION - ,- .
© COPYRIGHT - By - ALL RIGHTS RESERVED.

REVISIONS					
P	LTR	DESCRIPTION	DATE	DWN	APVD
	F	REV PER ECO 17-006927	6-16-17	CT	DM

1. THIS RCPT. IS DESIGN TO CONFORM TO THE LATEST ISSUE OF MIL-DTL-24308.
2. MAX WIRE INSULATION TO BE USED WITH THIS RCPT IS .054 [1.37] DIA.
3. METAL RETENTION CLIPS AREA INCLUDED IN INSERTS.
4. UL/CSA DESIGNATION STAMPED ON SHELL.
5. EPOXY IS APPLIED BETWEEN FRONT AND REAR SHELLS AND INSERTS.
6. NO GROMMET, CONTACTS, OR TOOL INCLUDED
7. NO GROMMET INCLUDED
8. NO INS/EXT TOOL INCLUDED
9. NO INS/EXT TOOL OR CONTACTS INCLUDED

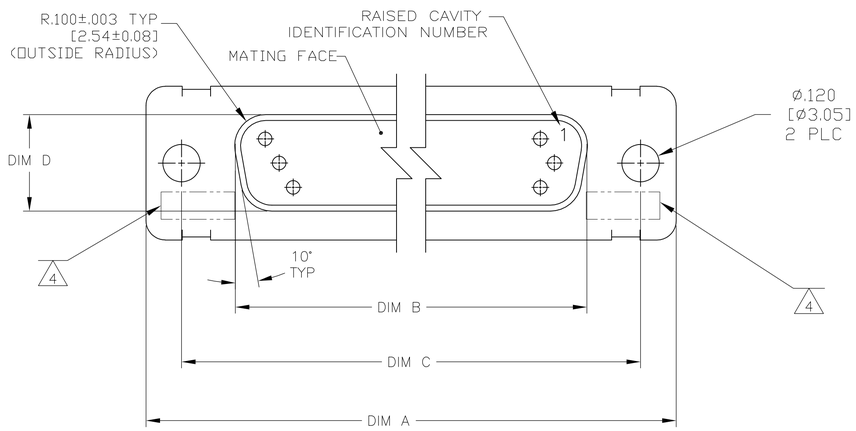

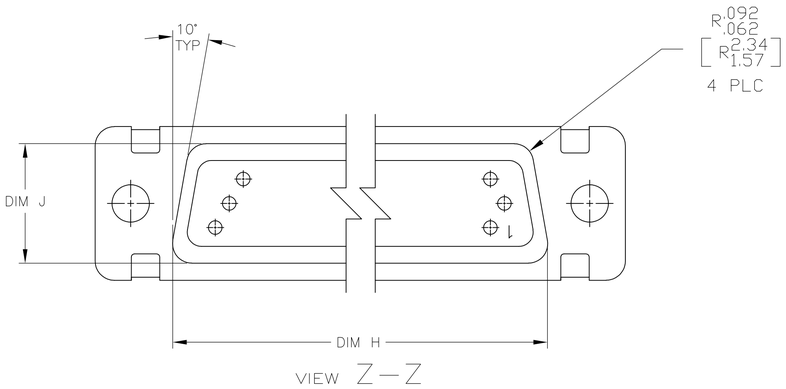

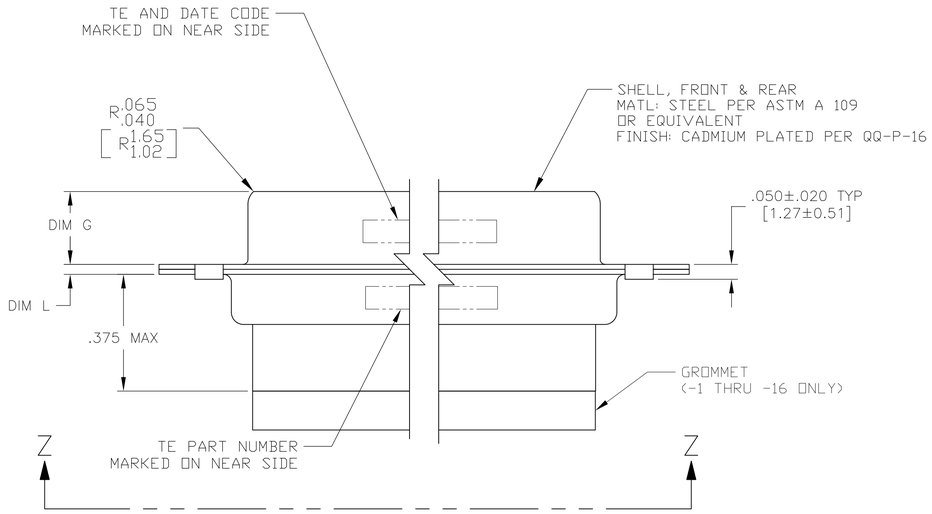

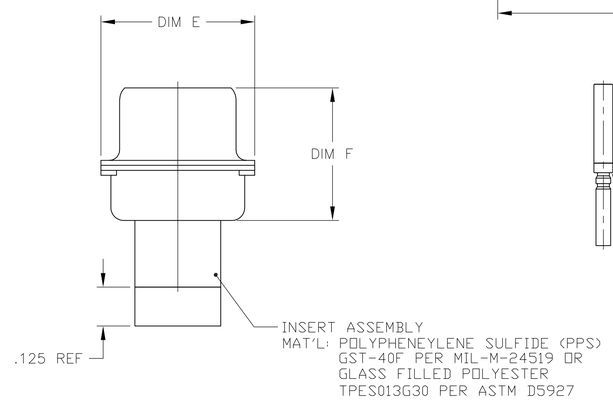

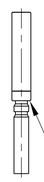

SIZE 22 SOCKET CONTACT
BODY MATERIAL: COPPER ALLOY PER SAE-AS39029 & MIL-DTL-24308.
PLATING: GOLD PER ASTM-B-488 (TYPE III) OVER NICKEL
PER QQ-N-290.
HOOD MAT'L: STAINLESS STEEL
FINISH: PASSIVATED
(2221760-1 THRU -5 ONLY)
(1-2221760-1 THRU -15 CONTACTS NOT INCLUDED)

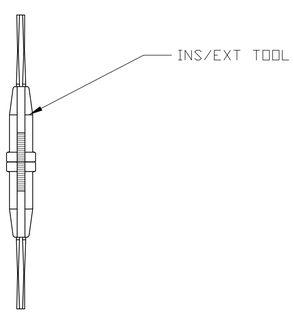

SCALE 1:1

REMARKS	MARKED TE PART NUMBER (2)	L	J	H	G	F	E	D	C	B	A	INSERT ARRANGEMENT	NO OF POS	SHELL SIZE	PART NUMBER
7	4-2221760-1	.040 [1.02] .020 [0.51]	.432 [10.97] .412 [10.46]	.769 [19.53] .749 [19.02]	.248 [6.30] .238 [5.82]	.439 [11.15] .419 [10.64]	.509 [12.93] .479 [12.17]	.316 [8.03] .306 [7.77]	.989 [25.12] .979 [24.87]	.648 [16.46] .638 [16.21]	1.228 [31.19] 1.198 [30.43]	MS18273-2	15	1	4-2221760-1
6	3-2221760-1	.040 [1.02] .020 [0.51]	.432 [10.97] .412 [10.46]	.769 [19.53] .749 [19.02]	.248 [6.30] .238 [5.82]	.439 [11.15] .419 [10.64]	.509 [12.93] .479 [12.17]	.316 [8.03] .306 [7.77]	.989 [25.12] .979 [24.87]	.648 [16.46] .638 [16.21]	1.228 [31.19] 1.198 [30.43]	MS18273-2	15	1	3-2221760-1
9	1-2221760-6	.049 [1.24] .029 [0.74]	.606 [15.39] .586 [14.88]	3.312 [58.72] 2.292 [58.22]	.248 [6.30] .238 [5.82]	.439 [11.15] .419 [10.64]	.683 [17.35] .653 [16.59]	.490 [12.45] .480 [12.19]	2.505 [63.63] 2.495 [63.37]	2.194 [55.72] 2.184 [55.47]	2.744 [69.70] 2.714 [68.93]	MS14004-1	104	6	1-2221760-6
9	1-2221760-5	.049 [1.24] .029 [0.74]	.544 [13.82] .524 [13.31]	2.188 [55.58] 2.168 [55.07]	.248 [6.30] .238 [5.82]	.439 [11.15] .419 [10.64]	.620 [15.75] .590 [14.99]	.428 [10.87] .418 [10.62]	2.411 [61.24] 2.401 [60.99]	2.069 [52.55] 2.059 [52.30]	2.650 [67.31] 2.620 [66.55]	MS18277-2	78	5	1-2221760-5
9	1-2221760-4	.049 [1.24] .029 [0.74]	.432 [10.97] .412 [10.46]	2.282 [57.96] 2.262 [57.45]	.248 [6.30] .238 [5.82]	.439 [11.15] .419 [10.64]	.509 [12.93] .479 [12.17]	.316 [8.03] .306 [7.77]	2.505 [63.63] 2.495 [63.37]	2.164 [54.97] 2.154 [54.71]	2.744 [69.70] 2.714 [68.94]	MS18276-2	62	4	1-2221760-4
9	1-2221760-3	.049 [1.24] .029 [0.74]	.432 [10.97] .412 [10.46]	1.635 [41.53] 1.615 [41.02]	.248 [6.30] .238 [5.82]	.439 [11.15] .419 [10.64]	.509 [12.93] .479 [12.17]	.316 [8.03] .306 [7.77]	1.857 [47.17] 1.847 [46.91]	1.516 [38.51] 1.506 [38.25]	2.103 [53.42] 2.073 [52.65]	MS18275-2	44	3	1-2221760-3
9	1-2221760-2	.040 [1.02] .020 [0.51]	.432 [10.97] .412 [10.46]	1.093 [27.76] 1.073 [27.25]	.248 [6.30] .238 [5.82]	.439 [11.15] .419 [10.64]	.509 [12.93] .479 [12.17]	.316 [8.03] .306 [7.77]	1.317 [33.45] 1.307 [33.20]	.976 [24.79] .966 [24.54]	1.556 [39.52] 1.526 [38.76]	MS18274-2	26	2	1-2221760-2
9	1-2221760-1	.040 [1.02] .020 [0.51]	.432 [10.97] .412 [10.46]	.769 [19.53] .749 [19.02]	.248 [6.30] .238 [5.82]	.439 [11.15] .419 [10.64]	.509 [12.93] .479 [12.17]	.316 [8.03] .306 [7.77]	.989 [25.12] .979 [24.87]	.648 [16.46] .638 [16.21]	1.228 [31.19] 1.198 [30.43]	MS18273-2	15	1	1-2221760-1
8	2221760-6	.049 [1.24] .029 [0.74]	.606 [15.39] .586 [14.88]	3.312 [58.72] 2.292 [58.22]	.248 [6.30] .238 [5.82]	.439 [11.15] .419 [10.64]	.683 [17.35] .653 [16.59]	.490 [12.45] .480 [12.19]	2.505 [63.63] 2.495 [63.37]	2.194 [55.72] 2.184 [55.47]	2.744 [69.70] 2.714 [68.93]	MS14004-1	104	6	2221760-6
8	2221760-5	.049 [1.24] .029 [0.74]	.544 [13.82] .524 [13.31]	2.188 [55.58] 2.168 [55.07]	.248 [6.30] .238 [5.82]	.439 [11.15] .419 [10.64]	.620 [15.75] .590 [14.99]	.428 [10.87] .418 [10.62]	2.411 [61.24] 2.401 [60.99]	2.069 [52.55] 2.059 [52.30]	2.650 [67.31] 2.620 [66.55]	MS18277-2	78	5	2221760-5
8	2221760-4	.049 [1.24] .029 [0.74]	.432 [10.97] .412 [10.46]	2.282 [57.96] 2.262 [57.45]	.248 [6.30] .238 [5.82]	.439 [11.15] .419 [10.64]	.509 [12.93] .479 [12.17]	.316 [8.03] .306 [7.77]	2.505 [63.63] 2.495 [63.37]	2.164 [54.97] 2.154 [54.71]	2.744 [69.70] 2.714 [68.94]	MS18276-2	62	4	2221760-4
8	2221760-3	.049 [1.24] .029 [0.74]	.432 [10.97] .412 [10.46]	1.635 [41.53] 1.615 [41.02]	.248 [6.30] .238 [5.82]	.439 [11.15] .419 [10.64]	.509 [12.93] .479 [12.17]	.316 [8.03] .306 [7.77]	1.857 [47.17] 1.847 [46.91]	1.516 [38.51] 1.506 [38.25]	2.103 [53.42] 2.073 [52.65]	MS18275-2	44	3	2221760-3
8	2221760-2	.040 [1.02] .020 [0.51]	.432 [10.97] .412 [10.46]	1.093 [27.76] 1.073 [27.25]	.248 [6.30] .238 [5.82]	.439 [11.15] .419 [10.64]	.509 [12.93] .479 [12.17]	.316 [8.03] .306 [7.77]	1.317 [33.45] 1.307 [33.20]	.976 [24.79] .966 [24.54]	1.556 [39.52] 1.526 [38.76]	MS18274-2	26	2	2221760-2
8	2221760-1	.040 [1.02] .020 [0.51]	.432 [10.97] .412 [10.46]	.769 [19.53] .749 [19.02]	.248 [6.30] .238 [5.82]	.439 [11.15] .419 [10.64]	.509 [12.93] .479 [12.17]	.316 [8.03] .306 [7.77]	.989 [25.12] .979 [24.87]	.648 [16.46] .638 [16.21]	1.228 [31.19] 1.198 [30.43]	MS18273-2	15	1	2221760-1

THIS DRAWING IS A CONTROLLED DOCUMENT.

DIMENSIONS: INCHES

TOLERANCES UNLESS OTHERWISE SPECIFIED:
0 PLC ± –
1 PLC ± –
2 PLC ± –
3 PLC ± .005 [0.13]
4 PLC ± –
ANGLES ± –

MATERIAL: SEE CALLOUTS
FINISH: SEE CALLOUTS

DWN C.C.THOMAS 8-20-14
CHK C.DERRICK 8-20-14
APVD C.DERRICK 8-20-14
PRODUCT SPEC —
APPLICATION SPEC —
WEIGHT 0.000000

TE Connectivity

NAME: RCPT ASSY, AMPLIMITE KIT, IP67
SIZE 1 THRU 5, SERIES 90
—

SIZE	CAGE CODE	DRAWING NO	RESTRICTED TO
A1	00779	C-2221760	—

CUSTOMER DRAWING | SCALE 4:1 | SHEET 1 OF 1 | REV F

4805 (1/15)