PART NAME	PLASTIBOX (STYLE "G") WITH BATTERY COMPARTMENT	PART No.	PSP-11572

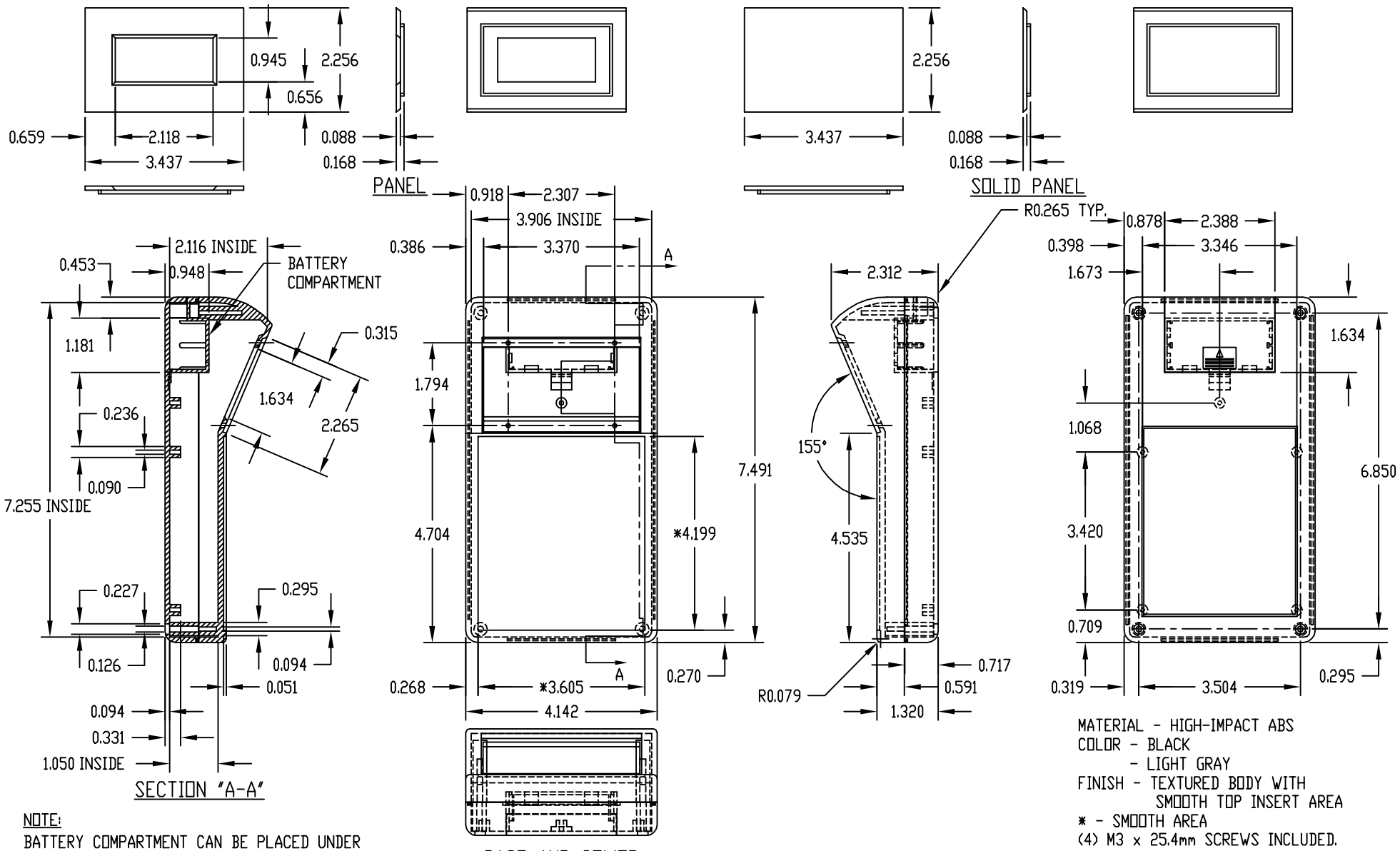

NOTE:
BATTERY COMPARTMENT CAN BE PLACED UNDER DISPLAY AREA (AS SHOWN) OR UNDER KEYPAD AREA.

MATERIAL - HIGH-IMPACT ABS
COLOR - BLACK
- LIGHT GRAY
FINISH - TEXTURED BODY WITH SMOOTH TOP INSERT AREA
* - SMOOTH AREA
(4) M3 x 25.4mm SCREWS INCLUDED.
ALL DIMENSIONS HAVE ±0.015 TOLERANCE.