THIS DRAWING IS UNPUBLISHED. RELEASED FOR PUBLICATION -,- .
© COPYRIGHT - BY TYCO ELECTRONICS CORPORATION. ALL RIGHTS RESERVED.

LOC	DIST
G	86

REVISIONS

P	LTR	DESCRIPTION	DATE	DWN	APVD
	L4	REV PER ECR 08-028310	10NOV08	JR	TM

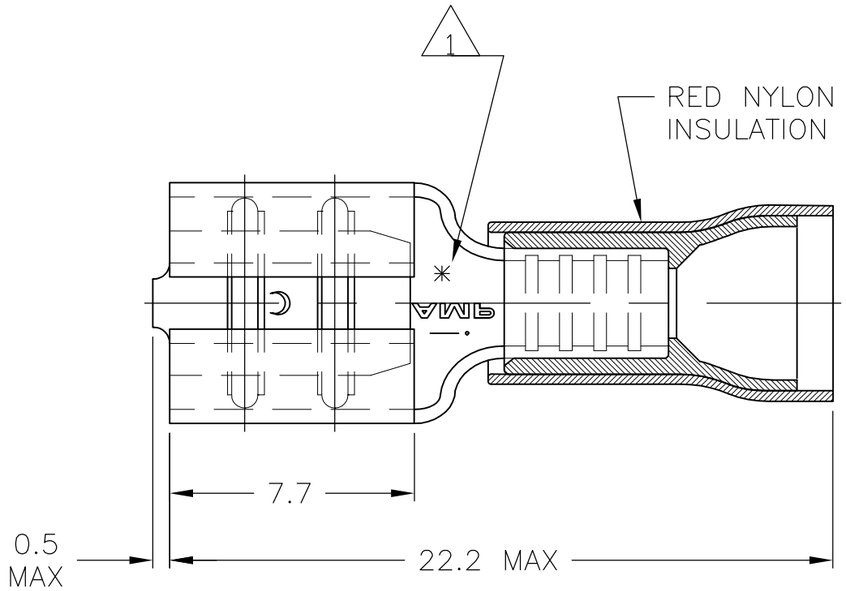

1. ASTERISK * FOR PHOS BRONZE VERSION ONLY.
2. WIRE RANGE: 0,3-1,5mm²
3. INSULATION RANGE: 3,5mm MAX DIA.
4. MATING TAB THK IS 0,8
5. SUPERSEDED BY 9-160583-5
6. SUPERSEDED BY 9-160583-6
7. SUPERSEDED BY 5-160583-2
8. SUPERSEDED BY 5-160583-5

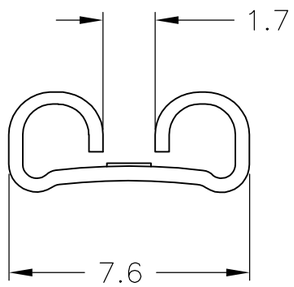

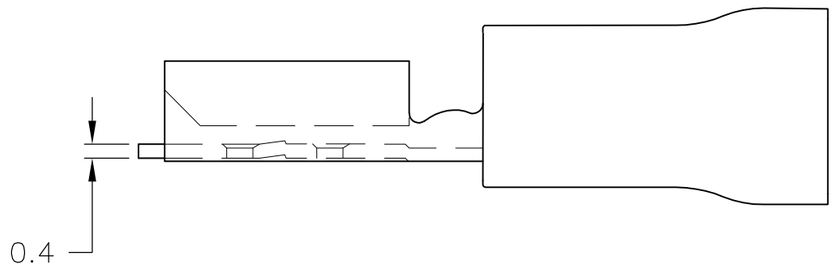

PACKAGE TYPE	FINISH	MATERIAL	PART NO.
TAPE MOUNTED	GOLD PLATED	1 PHOS. BRONZE	5-160583-7 8
	SILVER PLATED	1 PHOS. BRONZE	5-160583-6 8
	TIN PLATED	1 PHOS. BRONZE	5-160583-5
	GOLD PLATED	BRASS	5-160583-4 7
	SILVER PLATED	BRASS	5-160583-3 7
	TIN PLATED	BRASS	5-160583-2
LOOSE PIECE	TIN-LEAD	1 PHOS. BRONZE	9-160583-8 5
	GOLD PLATED	1 PHOS. BRONZE	9-160583-7 6
	SILVER PLATED	1 PHOS. BRONZE	9-160583-6
	TIN PLATED	1 PHOS. BRONZE	9-160583-5
	GOLD PLATED	BRASS	9-160583-4 6
	SILVER PLATED	BRASS	9-160583-3 6
	TIN PLATED	BRASS	9-160583-2

THIS DRAWING IS A CONTROLLED DOCUMENT.

DIMENSIONS: mm

TOLERANCES UNLESS OTHERWISE SPECIFIED:

0 PLC	± -
1 PLC	± -
2 PLC	± 0.38
3 PLC	± -
4 PLC	± -
ANGLES	± -

MATERIAL -

FINISH -

DWN JR RUTH 25AUG2004
CHK T MICHIELUTTI 25AUG04
APVD T MICHIELUTTI 25AUG04
PRODUCT SPEC -
APPLICATION SPEC -
WEIGHT -

Tyco Electronics
Tyco Electronics Corporation
Harrisburg, Pa 17105-3608

NAME
RECEPTACLE, FASTON, P.I.D.G.,
.250 SERIES
-

SIZE	CAGE CODE	DRAWING NO	RESTRICTED TO
A3	00779	C-160583	-

CUSTOMER DRAWING

SCALE 4:1 SHEET 1 OF 1 REV L4