THIS DRAWING IS UNPUBLISHED. RELEASED FOR PUBLICATION -,- .
© COPYRIGHT - BY TYCO ELECTRONICS CORPORATION. ALL RIGHTS RESERVED.

LOC	DIST
AD	00

REVISIONS

P	LTR	DESCRIPTION	DATE	DWN	APVD
	B	REV PER EC 0S12-0258-04	21MAY04	BC	GS
	B1	REVISED PER ECO-10-000443	15JAN10	KK	AEG
	C	ECR-10-019054	15SEP10	DP	MQW

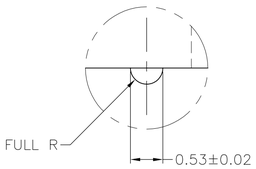

DETAIL Z
SCALE 20:1

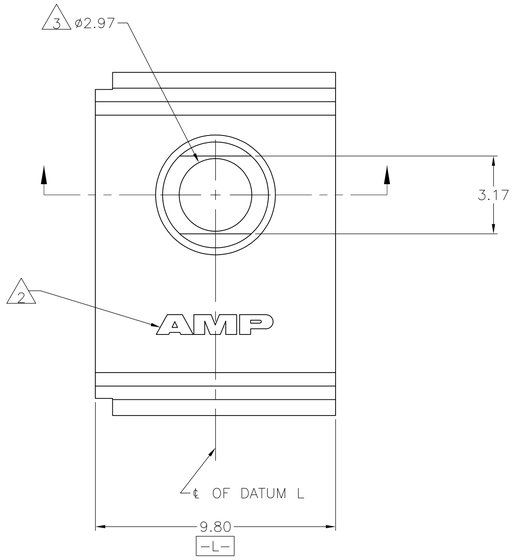

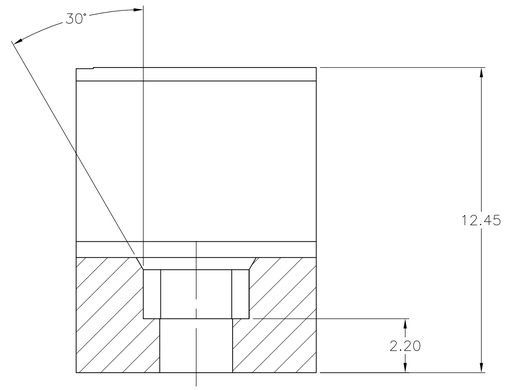

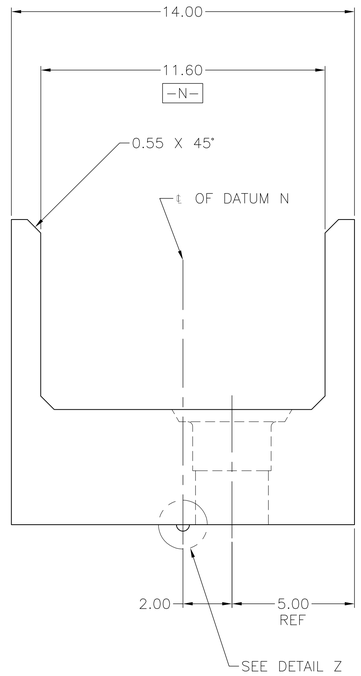

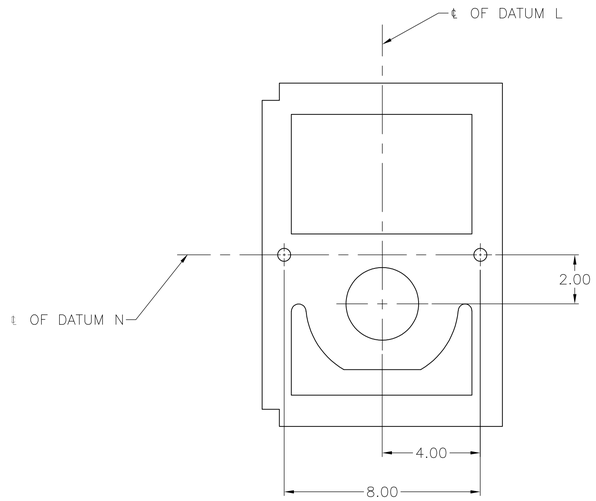

1. MATERIAL: GLASS FILLED POLYESTER, GRAY.
2. AMP TRADEMARK RECESSED.
3. THIS PART HAS A THRU HOLE TO ACCEPT A POWER/GUIDE PIN, AMP BASE PART NO 532828.
4. LOCATING HOLES NEED NOT BE PLATED THRU HOLES. BUT LOCATING NIPPLE IS DESIGNED TO FIT MIN PLATED THRU HOLE ø0.55mm FINISHED.
5. PLATED THRU HOLE FOR POWER APPLICATION ONLY.
6. SAME AS -1. SPECIAL PART FOR NORTEL AND THEIR CONTRACT MANUFACTURERS.
7. OBSOLETE PARTS: OBSOLETE CIS STREAMLINING PER D.RENAUD/D.SINISI

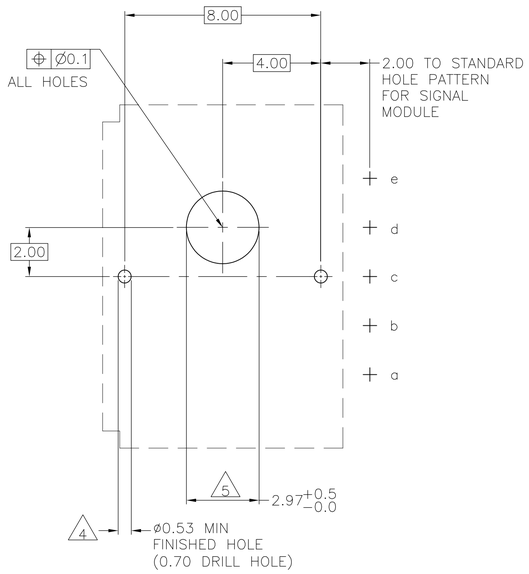

RECOMMENDED PCB-HOLE LAYOUT
COMPONENT SIDE

6 7	OBSOLETE	~~646274-8~~
		646274-1
		PART NUMBER

THIS DRAWING IS A CONTROLLED DOCUMENT.

DIMENSIONS: mm

TOLERANCES UNLESS OTHERWISE SPECIFIED:
0 PLC ± —
1 PLC ± —
2 PLC ± 0.1 ±0.2
3 PLC ± —
4 PLC ± —
ANGLES ± —

MATERIAL 1

FINISH —

DWN	D.R.BENDER	12/02/92
CHK	L.A.BARKUS	03/04/93
APVD	L.A.BARKUS	03/04/93
PRODUCT SPEC	—	
APPLICATION SPEC	—	
WEIGHT	—	

CUSTOMER DRAWING

Tyco Electronics
Tyco Electronics Corporation
Harrisburg, Pa 17105-3608

NAME: POWER/GUIDE PIN HOUSING MOLDED, 2mm HM

SIZE	CAGE CODE	DRAWING NO	RESTRICTED TO
A1	00779	C-646274	—

SCALE	SHEET	REV
8:1	1 OF 1	C

AMP 4805 REV 31MAR2000

H:\dmmod\646274-c.dwg