CUSTOMER DRAWING		
CATALOG # 10EGS1-2		
ECN #	APPRVD.	DATE
08-010595	ELC	21NOV08

SAFETY ORGANIZATIONS

THIS FILTER HAS BEEN FORMALLY RECOGNIZED, CERTIFIED OR APPROVED BY THE LISTED AGENCY. THEREFORE, ALL TEST/REQUIREMENTS SPECIFIED IN THE LATEST REVISION OF THE FOLLOWING AGENCY STANDARDS HAVE BEEN MET:

UL RECOGNIZED: UL 1283
CSA CERTIFIED: CSA 22.2, # 8
VDE APPROVED: EN 60939-2

OPERATING SPECIFICATIONS

LINE CURRENT/VOLTAGE: 10 AMP/40°C, 120/250VAC

LINE FREQUENCY: 50-60Hz

MAXIMUM LEAKAGE CURRENT,
EACH LINE TO GROUND: 0.22mA @ 120V, 60Hz
0.38mA @ 250V, 50Hz

OPERATING AMBIENT TEMP. RANGE: -10°C TO +40°C @ RATED CURRENT, I_r.

IN AN AMBIENT, T_a, HIGHER THAN 40°C, THE MAXIMUM OPERATING CURRENT, I_o, IS AS FOLLOWS:

$$I_o = I_r \sqrt{\frac{100 - T_a}{60}}$$

RELIABILITY SPECIFICATIONS:

STORAGE TEMPERATURE: -40°C TO +85°C
HUMIDITY: 21 DAYS @ 40°C 95% RH.
CURRENT OVERLOAD TEST: 6 TIMES I_r FOR 8 SECONDS

TEST SPECIFICATIONS:

INDUCTANCE: 0.27mH NOMINAL
CAPACITANCE: (MEASURED @ 1KHz, 0.250VAC MAX., 25°C±1°C)
LINE TO GROUND: 0.0053µF ±20%
LINE TO LINE: 0.101µF ±20%
DISCHARGE RESISTOR: 1.5MΩ
L/G AND L/L I.R.
NO DISCHARGE RESISTOR: 6000MΩ (MIN.) @ 100VDC, 20°C AND 50% RH

RECOMMENDED RECEIVING INSPECTION HIPOT:

LINE TO GROUND: 1500VAC OR 2250VDC FOR 1 MINUTE
LINE TO LINE: 1450VDC FOR 1 MINUTE

FILTER APPROVAL:

THE BEST WAY TO SELECT AND QUALIFY A FILTER IS FOR YOUR ENGINEERING TO TEST THE UNIT IN YOUR EQUIPMENT.

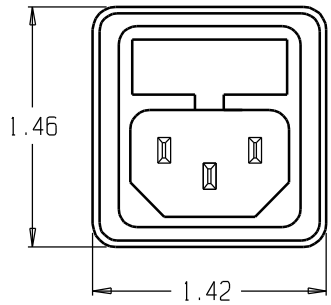

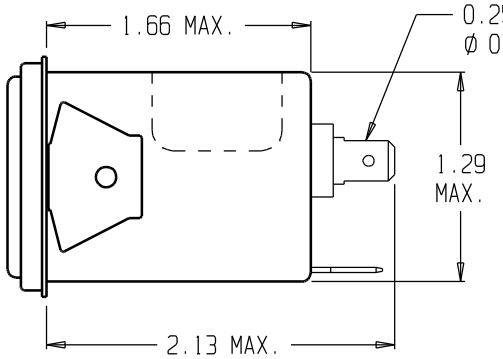

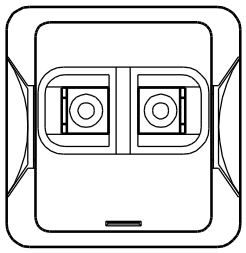

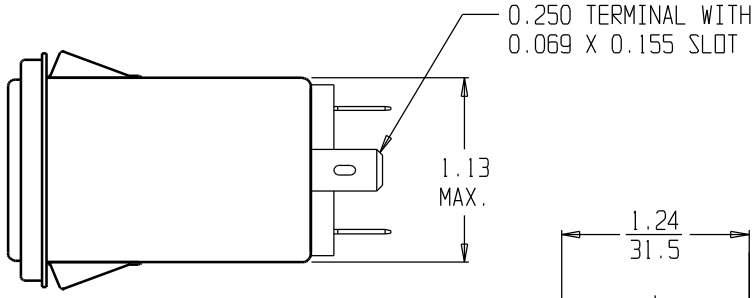

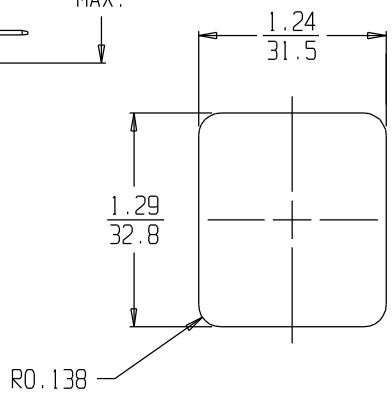

RECOMMENDED PANEL CUTOUT
(FRONT OR BACK MOUNTING)

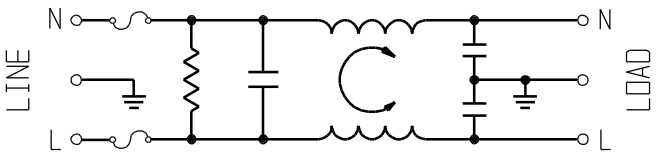

FUSE: 5mm X 20mm

50Ω- 50Ω(MINIMUM) INSERTION LOSS

FREQUENCY MHz	0.01	0.05	0.07	0.15	0.5	1.0	2.0	5.0	10	20	30
COMMON dB	0	1	2	4	6	8	16	26	33	48	28
DIFF. dB	1	2	4	7	17	23	24	22	43	40	38

THIRD ANGLE PROJECTION

UNLESS OTHERWISE SPECIFIED,
TOLERANCE TO BE ±.025
MATERIAL & FINISH: AS SUPPLIED

THIS INFORMATION IS CONFIDENTIAL AND PROPRIETARY TO TYCO ELECTRONICS CORPORATION AND ITS WORLDWIDE SUBSIDIARIES AND AFFILIATES. IT MAY NOT BE DISCLOSED TO ANYONE OTHER THAN TYCO ELECTRONICS PERSONEL, WITHOUT WRITTEN AUTHORIZATION FROM TYCO ELECTRONICS CORPORATION.
HARRISBURG, PENNSYLVANIA USA

Tyco Electronics
CORCOM PRODUCTS, 620 S. BUTTERFIELD RD. MUNDELEIN IL 60060

POWER LINE FILTER

TYCO ELECTRONICS PART NO. 0-1609117-8

SCALE: NTS	DATE: 12MAY08	CATALOG NO. 10EGS1-2	REV. 0
DRW. BY: SD	ORIG: ELC		