THIS DRAWING IS UNPUBLISHED. RELEASED FOR PUBLICATION - ,- .
© COPYRIGHT - By - ALL RIGHTS RESERVED.

REVISIONS

P	LTR	DESCRIPTION	DATE	DWN	APVD
	AV3	REVISED PER ECR-16-009296	28JUN2016	BW	RS

1. BRASS PER QQ-B-626.
2. BERYLLIUM COPPER PER ASTM-B-196
3. NYLON PER ASTM-D-4066, BLACK
4. POLYMETHYLPENTENE GENERAL PURPOSE, NATURAL
5. 0.00076[.000030] MINIMUM GOLD PER MIL-G-45204.
6. 0.00254[.000100] MINIMUM GOLD PER MIL-G-45204.
7. SHIELDED CABLE #26=NAS-702 CLASS A & C, AND MIL-W-16878 TYPES E & EE, SHIELDED CABLE #24=NAS-702 CLASS A & C, AND MIL-W-16878 TYPES E & EE, SHIELDED CABLE #22=NAS-702 CLASS C, AND MIL-W-16878 TYPE E, AND MIL-C-7078A TYPE I NUMBER 1 DIELECTRIC .068 O.D.
8. RG-174/U, RG-179A/U, RG-187/U, AND 21-598.
9. SHIELDED CABLE #26=NAS-702 CLASS A, AND MIL-C-7078A TYPE II.
10. SEE IS 408-1770
11. NYLON PER ASTM-D-4066, NATURAL
12. OBSOLETE PARTS: OBSOLETE CIS STREAMLINING PER D.RENAUD/D.SINISI

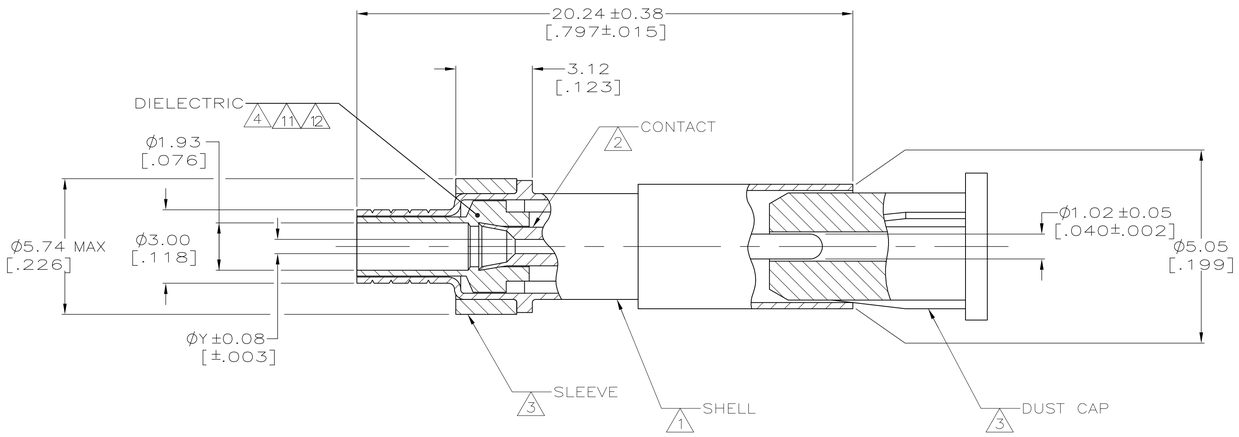

	CONTACT PLATING	SHELL PLATING	WEIGHT	CABLE OR WIRE SIZE	CRIMP TOOL	Y	(3) FERRULE QTY=1	(2) SPRING RETENTION QTY=1	(1) SOCKET ASSY QTY=1	PART NUMBER
OBSOLETE	5	5	.034 OUNCES	–	–	0.81[.032]	–	–	–	1-201144-8
	–	–	1.65 GRAMS MAX	8	45368-2	–	9-328666-3	201142-2	201144-1	1-201144-1
12 OBSOLETE	6	6	.034 OUNCES	–	–	0.81[.032]	–	–	–	201144-7
OBSOLETE	6	6	.034 OUNCES	–	–	0.58[.023]	–	–	–	201144-6
	5	5	.034 OUNCES	–	–	0.81[.032]	–	–	–	201144-5
	5	5	.034 OUNCES	–	–	1.07[.042]	–	–	–	201144-3
	5	5	.034 OUNCES	–	–	0.58[.023]	–	–	–	201144-1

THIS DRAWING IS A CONTROLLED DOCUMENT.

DIMENSIONS: mm [INCHES]

TOLERANCES, UNLESS OTHERWISE SPECIFIED:
0 PLC ± –
1 PLC ± –
2 PLC ± –
3 PLC ± 0.20[.008]
4 PLC ± –
ANGLES ± –

MATERIAL –
FINISH –

DWN J. LIPPERT 18 DEC 89
CHK M. SNEED 22 FEB 90
APVD B. ADAMS 22 FEB 90
PRODUCT SPEC 108-12021
APPLICATION SPEC –
WEIGHT 0

TE Connectivity

NAME SOCKET, MINIATURE SERIES

SIZE	CAGE CODE	DRAWING NO	RESTRICTED TO
A1	00779	C-201144	–

CUSTOMER DRAWING SCALE 8:1 SHEET 1 OF 1 REV AV3

4805 (1/15)