MATERIAL NUMBER	OLD PART NUMBER
130035-0072	DNAPT

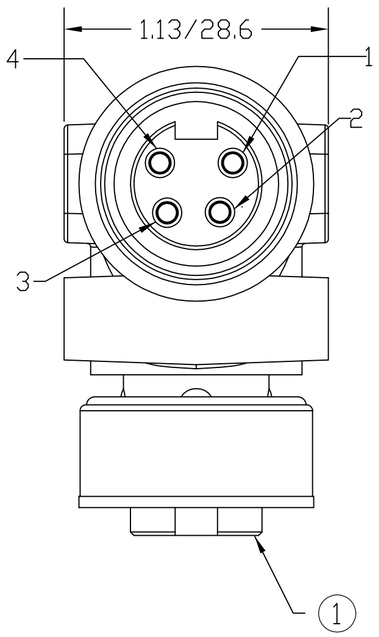

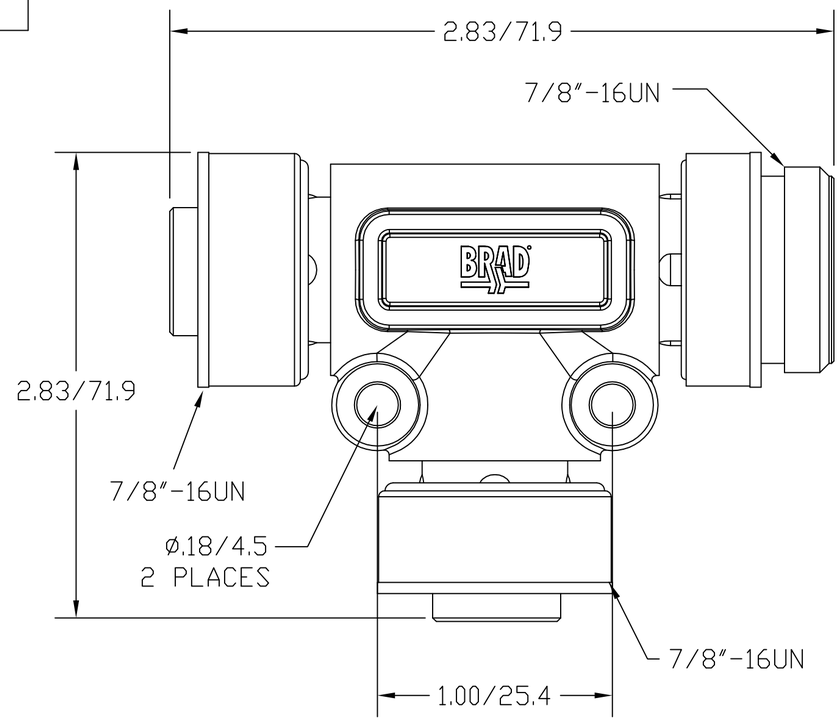

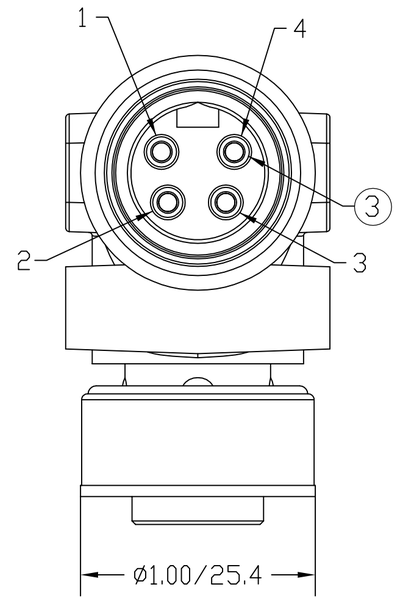

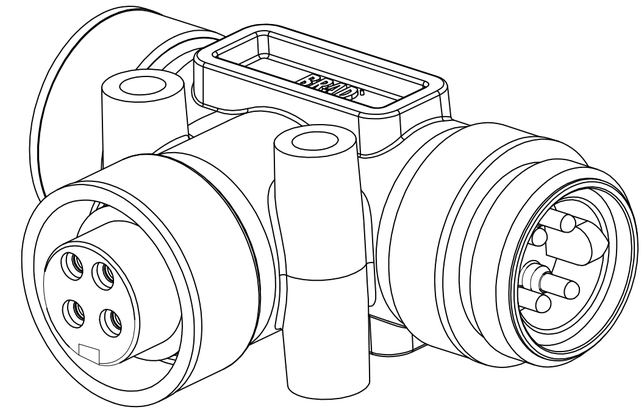

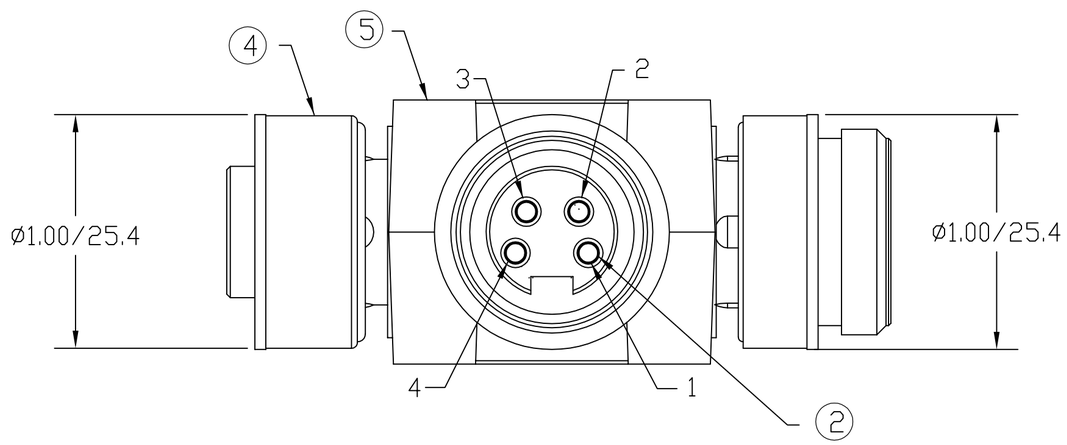

SCHEMATIC

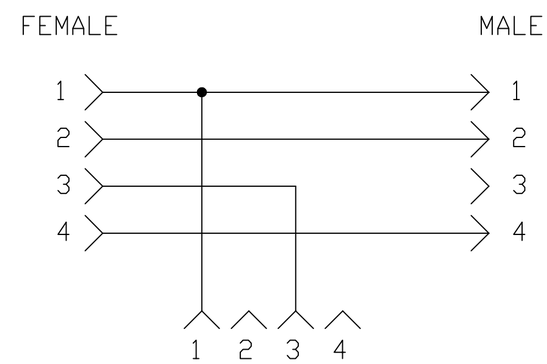

VOLTAGE RATING	600 VAC/VDC
AMPERAGE RATING	8 AMPS
PROTECTION	IP67
OPERATING TEMPERATURE	-20°C TO 80°C
UL CERTIFICATIONS	UL RECOGNIZED, FILE NO. E152210
CSA CERTIFICATIONS	CSA CERTIFIED, FILE NO. LR6837

ITEM	COMPONENT	MATERIAL	FINISH
1	INSERT	TPE	GRAY
2	CONTACT SOCKET	COPPER ALLOY	GOLD OVER NICKEL
3	CONTACT PIN	COPPER ALLOY	GOLD OVER NICKEL
4	COUPLING NUT	ZINC DIE CAST	BLACK E-COATED
5	OVERMOLD	TPE	GRAY

RLSD DRAWING
EC NO: WNA2010-0131
DRWN: BWOODMAN 8/26/09
CH'KD: TW —
APPR: JFMURPHY 2009/08/27
DESCRIPTION
REV A

QUALITY SYMBOL
▼=0
(C)=0

GENERAL TOLERANCES (UNLESS SPECIFIED)

	mm	INCH
4 PLACES	±----	±----
3 PLACES	±----	±----
2 PLACES	±----	±.01
1 PLACE	±0.3	±----
ANGULAR ±----°		

DRAFT WHERE APPLICABLE MUST REMAIN WITHIN DIMENSIONS

DIMENSION STYLE: IN/MM
SCALE: ----
DESIGN UNITS: ----
THIRD ANGLE PROJECTION

DRAWN BY: BW DATE: 2009/08/25
CHECKED BY: JM DATE: 2009/08/25
APPROVED BY: JFMURPHY DATE: 2009/08/26

TITLE: MINI-CHANGE 4-POLE TEE DEVICENET AUX POWER
---

molex MOLEX INCORPORATED

MATERIAL NO. 1300350057
DOCUMENT NO. SD-130035-008
SHEET NO. 1 0F 1
SIZE C

THIS DRAWING CONTAINS INFORMATION THAT IS PROPRIETARY TO MOLEX INCORPORATED AND SHOULD NOT BE USED WITHOUT WRITTEN PERMISSION