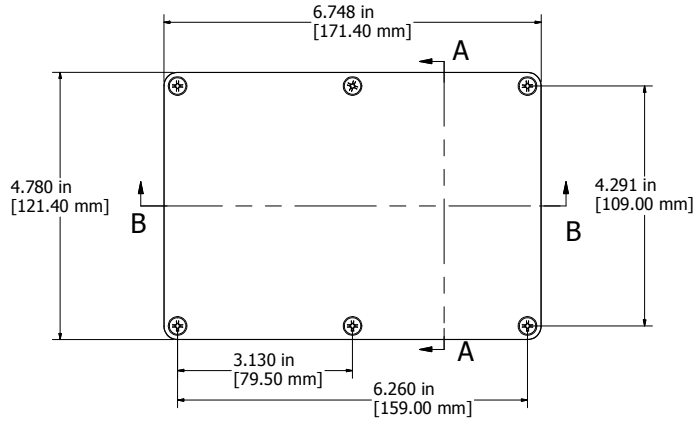

ASSEMBLY

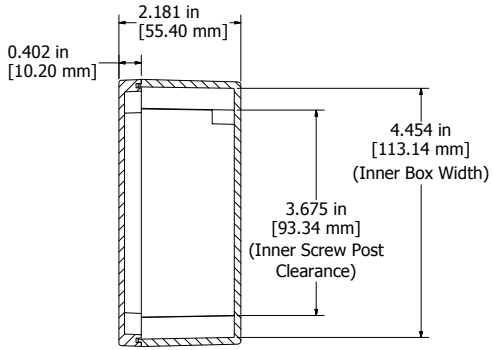

SECTION A-A
End View of Assembly

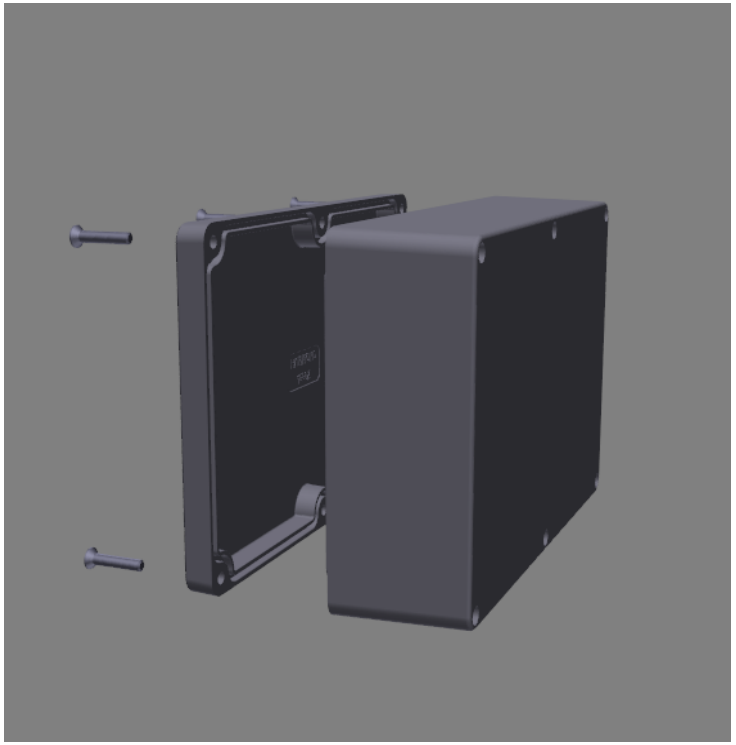

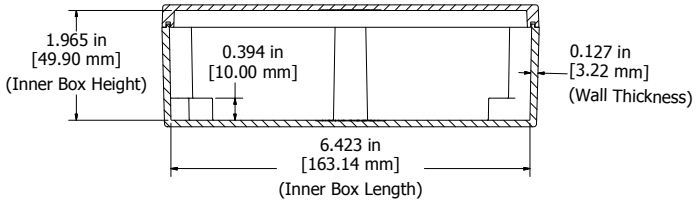

SECTION B-B
Side View of Assembly

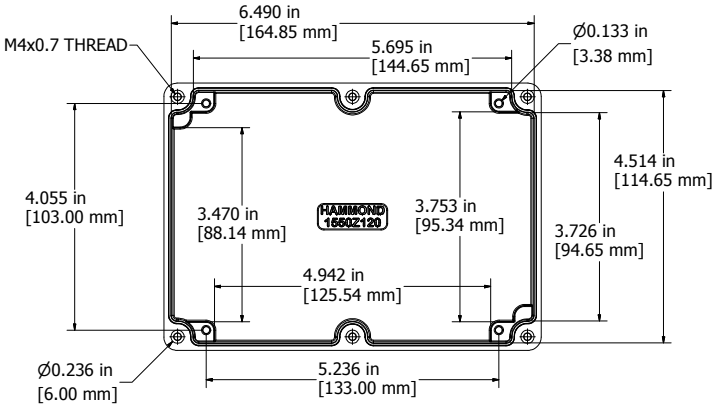

Top View Looking Inside Box

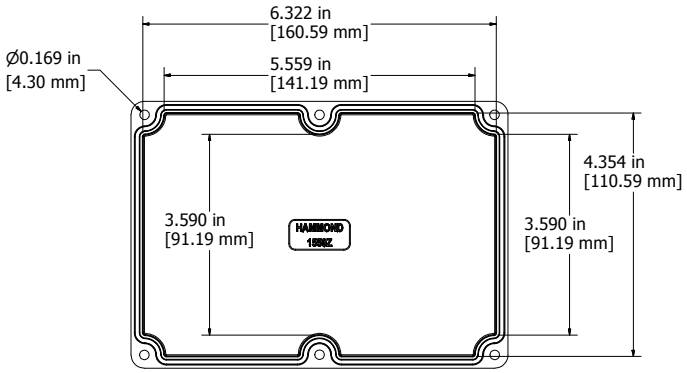

View Looking Inside Lid

Enclosures can be Factory Modified (Milling, Drilling, Printing etc.)
Contact Factory mjm@hammondmfg.com for quotes
Solid models of this enclosure available in STEP or IGES.

NOTES
Purchased assembly includes enclosure, M4x20 lid screws
Gasket - Pre-formed Silicone Rubber
Cover screws should be torqued to 5-7.5 lbf.in (50-75 cN.m)

1550Z120	
PART NUMBERS	
Unfinished	1550Z120
Black Textured Powder Paint - RAL 9011	1550Z120BK

HAMMOND MANUFACTURING™

1550Z120

www.hammondmfg.com