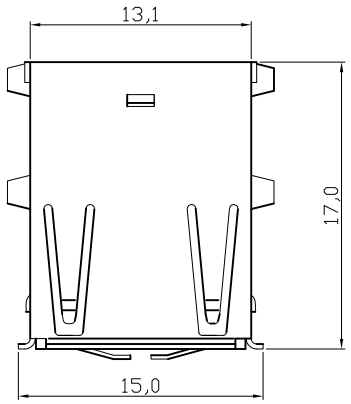

NOTES:

1.Insulation: Glass Filled polyester UL94V-0, Color Black
2.Contact :Phosphor Bronze
3.Outer & Inner shell : Brass
4.Plating : Selective Gold Flash over 50µ" Nickel
5.Shell Plating: 80µ" Nickel over 100µ" Cu
6.Rear Shell: Steel with Nickel plated

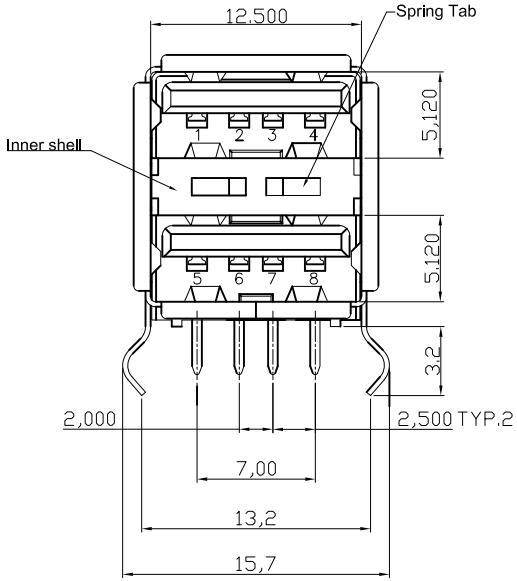

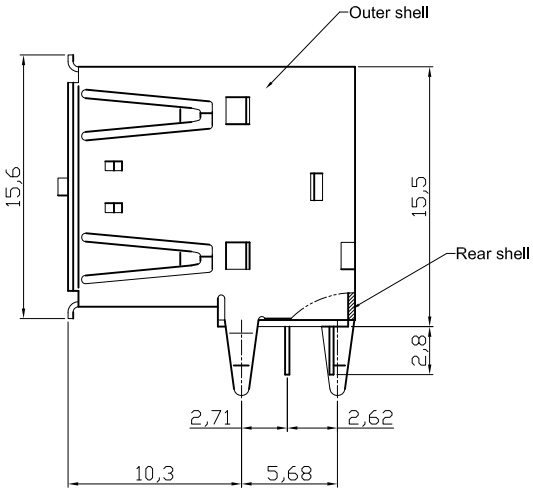

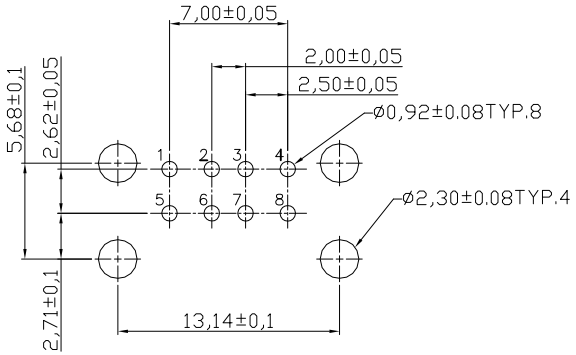

Recommended PCB Layout

RoHS compliant

Scale	1:1
TOLERANCE	
.X	±0.30
.XX	±0.20
.XXX	±0.10
DIM	TOL
X.°	±1°
Angle	TOL
UNIT	mm

Id.	Modification	Date	Name
③	Modify insulator color to black	07.07.2009	Dean
②	Re-draw	06.08.2008	Hellwig
①	Drawn	30.05.2007	Hellwig

	Date	Name
Drawn	30.05.2007	Hellwig
Approved	07.07.2009	Hellwig

ASSMANN WSW components

Customer-No.

ASSMANN WSW-No.
A-USB A-2P-C

Drawing-No.
ASS 1360A CO

rev03

Replace

SHEET