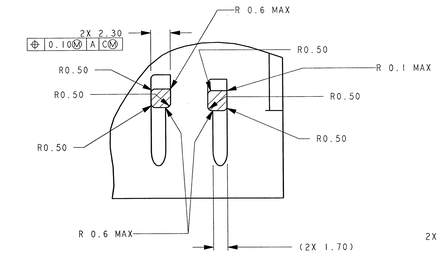

SECTION C-C
SCALE 4:1

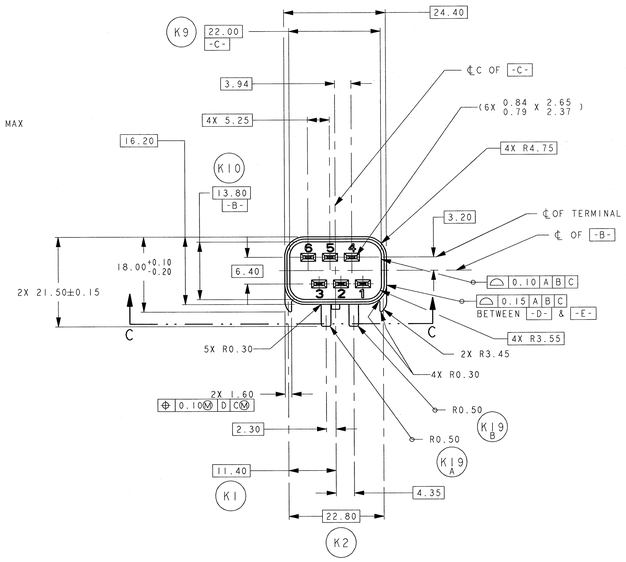

POLARIZING OPTION
TYPE "A" SHOWN
DIMENSIONS FOR OTHER OPTIONS
SAME EXCEPT AS SHOWN

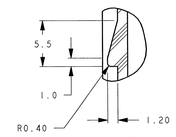

DETAIL Z
SCALE 4:1

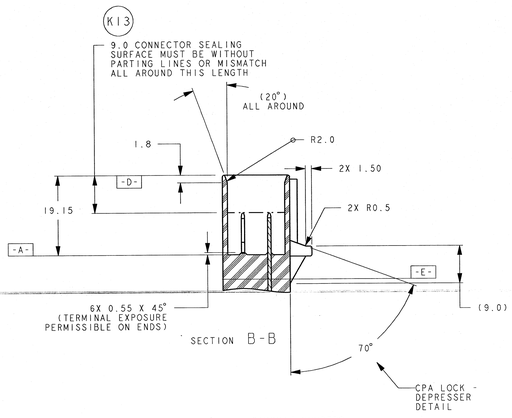

SECTION B-B

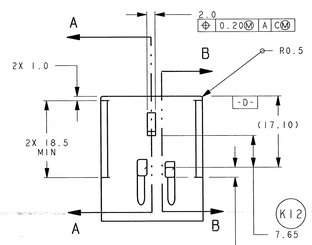

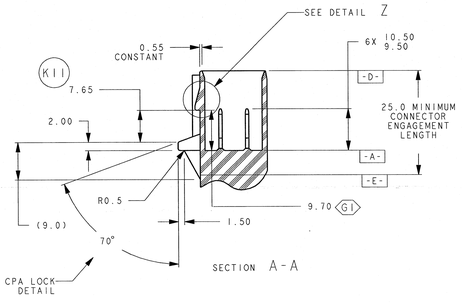

SECTION A-A

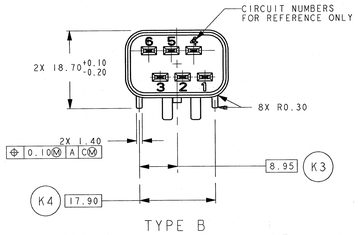

TYPE B
ALL DIM"S SAME AS TYPE
"A" EXCEPT AS SHOWN

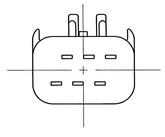

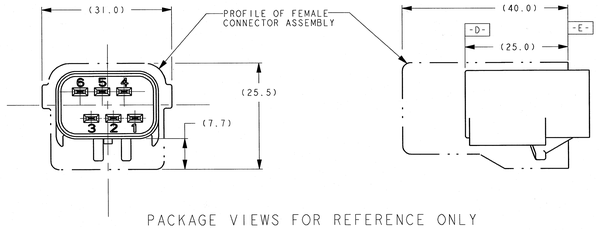

PACKAGE VIEWS FOR REFERENCE ONLY

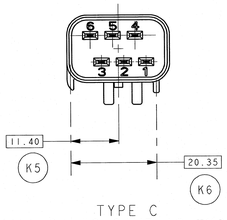

TYPE C
ALL DIM"S SAME AS TYPES
A & B EXCEPT AS SHOWN

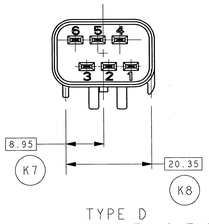

TYPE D
ALL DIM"S SAME AS TYPES
A & B EXCEPT AS SHOWN

K18

54200603	UN-SEALED	NATURAL	TYPE D
54200611	SEALED		
54200602	UN-SEALED	DK. GRAY	TYPE C
54200610	SEALED		
54200646	UN-SEALED	LT. GRAY	TYPE B
54200601	UN-SEALED		
54200609	SEALED		
54200660	SEALED	BLACK	TYPE A
54200626	SEALED		
54200600	UN-SEALED		
54200608	SEALED		
MATES WITH 6 WAY FEMALE	SEALED OR UN-SEALED	COLOR	POLARIZING OPTION

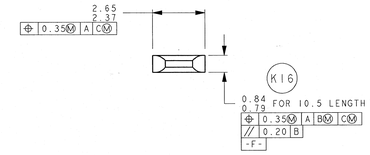

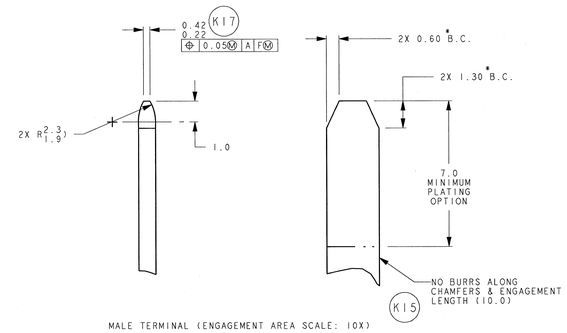

MALE TERMINAL (ENGAGEMENT AREA SCALE: 10X)

*B.C. INDICATES BEFORE COINING

BASE MATERIAL - HIGH CONDUCTIVITY COPPER ALLOY, MUST BE APPROVED BY THE RESPONSIBLE ENGINEER

PLATING NOTES (CONTACT AREA)

TIN (125°C MAXIMUM CONTINUOUS TEMPERATURE)

A. HOT TIN DIP 0.5um TO 2um (20uin TO 80uin)
OR
B. POST ELECTRO MATTE TIN
BARRIER PLATE (OPTIONAL FOR SOLDERABILITY) - UNDERPLATE WITH COPPER 2.5um (100uin) MIN. THICKNESS
TOP LAYER 5.0um±2.5um (200uin±100uin) TIN PER ASTM B-545-83

PRECIOUS METAL: WHEN SPECIFIED (PER USCAR EWCAP PLATING REQUIREMENTS)

BARRIER PLATE - (OPTIONAL FOR SOLDERABILITY) UNDERPLATE WITH COPPER 2.5um (100uin) MIN THICKNESS PER ATSM __ TBD

INTERMEDIATE LAYER #1 SULFAMATE DUCTILE NICKEL 1.27um - 2.5um (50uin - 100uin) THICK PER ASTM B699 TYPE 2

INTERMEDIATE LAYER #2 OPTIONAL 1.0um (40uin) MIN THICKNESS PALLADIUM ELECTROPLATE PER ASTM B_TBD

TOP LAYER 0.1um (4uin) MIN THICKNESS HARD GOLD OVER LAYER #2 0.75um (30uin) MIN THICKNESS HARD GOLD IF LAYER #2 IS NOT APPLIED, PER ASTM B _TBD

FOR HEAVY DUTY DIESEL ENGINES: WHEN SPECIFIED

TOP LAYER 1.27um (50uin) MIN THICKNESS HARD GOLD ELECTROPLATE PER ASTM B-488 TYPE 2 CODE "C" OVER INTERMEDIATE LAYER #1

OR

INTERMEDIATE LAYER #2 1.27um (50uin) MIN THICKNESS PALLADIUM ELECTROPLATE

TOP LAYER 0.05um (2uin) MIN THICKNESS HARD GOLD ELECTROPLATE

NOTE: ABOVE NOTES RELATING TO MATERIAL AND PLATING ARE FOR REFERENCE ONLY. PARTS MUST BE VALIDATED TO CUSTOMER REQUIREMENTS.

FCI AUTOMOTIVE
APR 2 6 2005
AMERICAS
FCI MASTER COPY WHEN IN RED

K INDICATES IN - PROCESS INSPECTION FOR MANUFACTURING DIMENSION(S) OR SPECIFICATION(S) : 20

WIRING FABRICATORS MUST PURCHASE FROM ENGINEERING APPROVED SOURCES

MATES WITH 6 WAY FEMALE INSULATOR SEE CHART

DRAFT PERMISSIBLE WITHIN DIMENSIONAL TOLERANCE ONLY UNLESS OTHERWISE SPECIFIED

MUST CONFORM TO SAE/USLAR - 2 REV 4

R 0.15 MAXIMUM ON CORNERS AND FILLETS SHOWN AS SHARP

PART TO BE MOLDED FREE FROM FLASH, VOIDS, STRESSES, IMPERFECTIONS, AND TOOL MARKS, THAT AFFECT FUNCTION, OR HANDLING OF THE PART

ALL EJECTOR MARKS 0.10 MAXIMUM HIGH TO 0.25mm BELOW THE SURFACE OF THE PART.

TOOL MUST BE INTERCHANGEABLE TO PRODUCE ALL KEY TYPES AS CHARTED UNLESS OTHERWISE SPECIFIED

G DENOTES GAGE REQUIREMENTS FOR USER AND MANUFACTURER

K20 BLADE TERMINAL MUST BE PER THE INSERT ABOVE.

UNCONTROLLED

PART NUMBER F.C.I.	PART NUMBER	REV DATE	REV	DRAWING NUMBER
	CUSTOMER			

ZONE	ECN	LET	REVISION RECORD	DATE	DWN	CHK	REL
I	7683	A	RELEASED FOR ENGINEERING USE	04-22-05	JRN	SS	SS

DRAWING NO. G36006 REVISION A

LAST INSP CODE -
LAST TOOL CODE -
LAST SEC C
LAST DATUM F

FCI

THIS DRAWING, DESIGN AND ALL OTHER INFORMATION CONTAINED THEREIN IS PROPRIETARY AND THE PROPERTY OF FCI. This drawing may not be copied, reproduced, or disclosed to any third party without the expressed written permission of FCI.
©FCI April 1999

THIRD ANGLE PROJECTION

FCI 1770 Marie Street Westland, Michigan 48185-3233

UNLESS OTHERWISE SPECIFIED
DIMENSIONS IN MM: 1 PLACE DIM ± 0.25; 2 PLACE DIM ± 0.10; ANGULAR DIM ± 2°
DO NOT SCALE DRAWING

DRAWN	J. TALLMAN	DATE 8-14-03
CHECK	SUCHA SIAN	DATE 04-22-05
ENGR	SUCHA SIAN	DATE 04-22-05
APPR	SUCHA SIAN	DATE 04-22-05
SCALE: 2:1 & AS NOTED		

MATERIAL: SEE NOTES, FOR TERMINAL MATERIAL, PLATTING AND FOR PLASTIC, AS REQUIRED BY ENVIRONMENTAL CONDITIONS

REFERENCE: DCA DWG #04707300
2.8 APEX CONNECTOR SYSTEM

THIS IS A COMPUTER AIDED DESIGN DRAWING SYSTEM: PROVE
CAD ID. NO.: G36006 FILE NAME: G36006

NAME: FCI 2.80MM DIRECT CONNECT INTERFACE SPECIFICATION 6-WAY MALE

DRAWING NO. G36006 REV. A
SHEET 1 OF 1

TOOL NO.: REF DWG. A FILE LOCATION: FID3