DRAWING MADE IN THIRD ANGLE PROJECTION

THIS DRAWING IS UNPUBLISHED. RELEASED FOR PUBLICATION ,19 .

© COPYRIGHT 19 BY AMP INCORPORATED. ALL INTERNATIONAL RIGHTS RESERVED.

LOC	DIST	P	F
AF	50		

REVISIONS

ZONE	LTR	DESCRIPTION	DATE	APPD
	A	RELEASED AF-8036	6/18/92	JR/CM

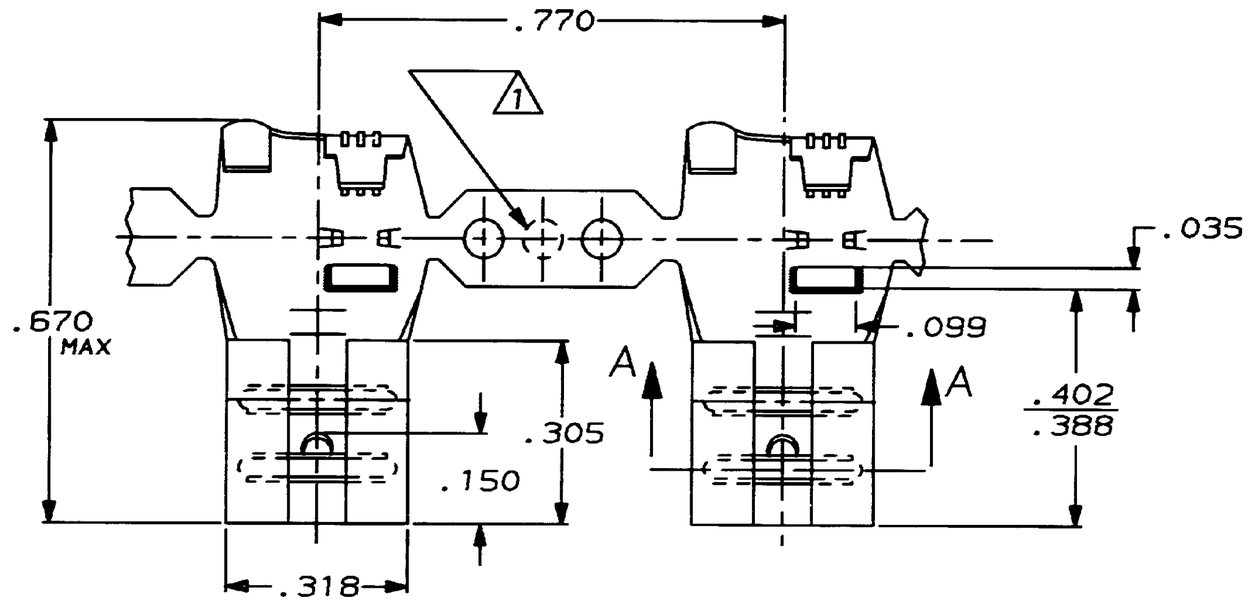

1 SINGLE OR DOUBLE PILOT HOLE OPTIONAL

2 MAX FIRST INSERTION FORCE, 20 LBS. USING GAGE 100505.

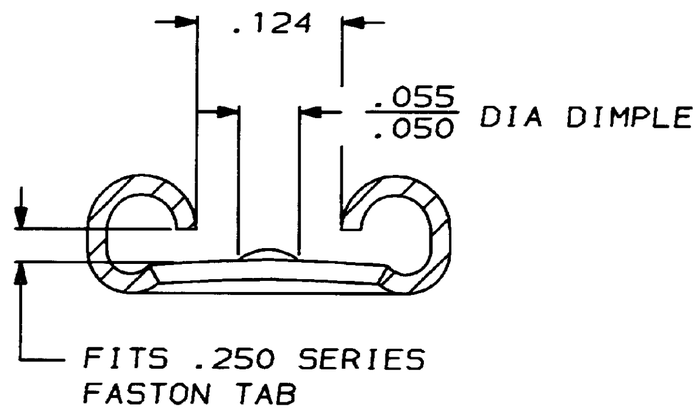

SECTION A–A
SCALE 8:1

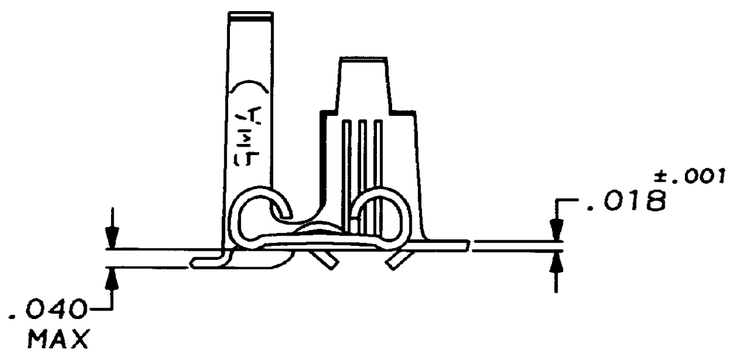

.110-.210	18-12	.032	63651-1
INSULATION RANGE	WIRE SIZE	MATING TAB THK ±.001	PART NO

DO NOT SCALE PRINT.
UNLESS SPECIFIED
DIMENSIONS IN INCHES
TOLERANCES ON:
2 PLC DEC ± -
3 PLC DEC ± .015
ANGLES ± -

MATERIAL: #3H PHOS BRZ

FINISH: TIN

DR 6/8/92 JR RUTH
CHK 6/8/92 MS FEHER
APPD 6/8/92 C MEYERS
APPD 6/8/92 R KUZO
PRODUCT SPEC –
APPLICATION SPEC –
WEIGHT –

AMP INCORPORATED
Harrisburg, Pa. 17105

NAME: RECEPTACLE, FASTON, FLAG, .250 SERIES

SIZE	CAGE CODE	DRAWING NO
B	00779	63651
SCALE 4:1		SHEET 1 OF 1

CUSTOMER DRAWING

AMP 1470-15 REV 6-89