PRODUCT NO	PCB THICKNES	DIM A	NOTES
63721-101	1.6 & 2.4	4.19	4
63721-102	1.6 & 2.4	4.19	2 & 4

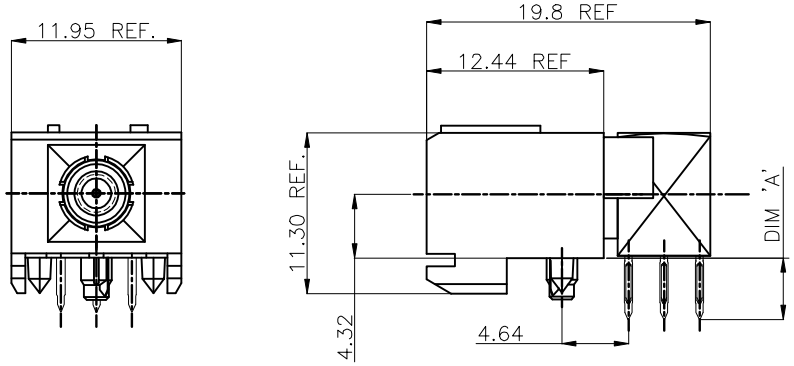

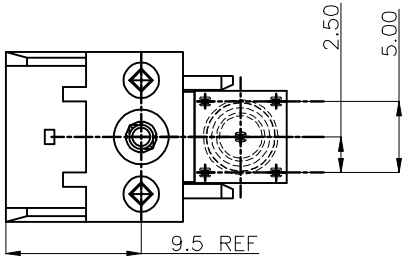

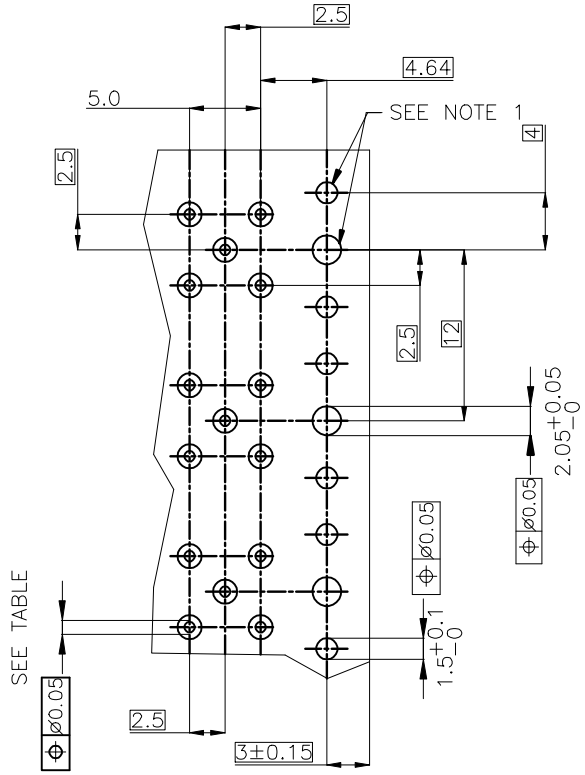

RECOMMENDED HOLE PATTERN, COMPONENT SIDE.

PRESS FIT HOLES	
HOLE DIAMETER AFTER PLATING	0.65 – 0.80
DRILLED HOLE	0.81 – 0.86 (0.85 DRILL)
COPPER PLATING	0.025 MIN
TIN PLATING	0.005 – 0.015

NOTES:

1. INDICATED HOLES ARE TO BE UNPLATED
2. COMPONENTS SUPPLIED UNASSEMBLED
3. SEE PRINT 10026911 FOR COAX. PLATING SPEC.
4. ADD "LF" SUFFIX AT THE END OF PART NUMBER FOR LEAD FREE OPTION.
5. THIS PRODUCT MEETS EUROPEAN UNION DIRECTIVES AND OTHER COUNTRY REGULATION AS DESCRIBED IN GS-22-008.
6. THE HOUSING WILL WITHSTAND EXPOSURE TO 260°C PEAK TEMPERATURE FOR 15 SECONDS IN A WAVE SOLDER APPLICATION WITH A 1.5mm MINIMUM THICK CIRCUIT BOARD OR FOR 20 SECONDS IN A CONVECTION, INFRA-RED OR VAPOR PHASE REFLOW OVEN. SEE APPLICATION NOTES/PROCEDURES IF THEY ARE AVAILABLE.

mat'l. code

surface ISO 1302

tolerance ISO 406 ISO 1101

projection

product family: METRAL (tm)

ltr	ecn no	dr	date
A	V81487	GCR	9/03/98
B	V94348	HTB	11/16/99
C	M06-0286	MNR	7/27/06
D	M07-0101	MHT	2/09/07
E	M09-0054	MHT	3/26/09

tolerances unless otherwise specified: angles 0°±2°; linear .X±0.3, .XX±0.13, .XXX±0.050

MM

scale 1:1

dr	M. FETROW	7/16/98
engr	C. PENDLETON	9/03/98
chr	C. PENDLETON	9/03/98
appd	C. PENDLETON	9/03/98

title: RIGHT ANGLE COAX ASSEMBLY

dwg no: 63721 sheet 1 of 1 size A3

type: Product Customer Drawing

sheet index	revision	E
	sheet	1

form: A3

FCIconnect.com
Copyright FCI