# Rugged Digital Networks Solutions

## Reinforced Infocom Connectors for Harsh Environment

## RJ Field - USB Field

Amphenol

January 2014 update

Connecting to people + technology

www.rjfield.com

# TABLE OF CONTENTS

## Rugged Ethernet Solutions

### Field installable


RJFRB: Plastic circular shell - Reverse bayonet coupling ..... 10
RJF544: Plastic circular shell - Push pull coupling ..... 13
RJFEZ: Plastic rectangular shell - Lever coupling ..... 15
RJF: Metallic circular shell based on MIL-DTL-26482 H - Bayonet coupling ..... 17
RJF special receptacles: cable mount inline and PCB tails receptacles ..... 20
NEW RJF receptacles and plug with 360° EMI backshells ..... 21
RJF Environmentaly sealed receptacles, transversally sealed receptacles ..... 22
RJF Hermetic receptacles ..... 23
NEW RJF for big insulation wire up to 1.6 mm [0.062 inch] ..... 24
RJ Field receptacle with Self Closing Cap ..... 25
RJFTV: metallic circular shell based on MIL-DTL-38999 series III - Thread coupling with anti-decoupling device ..... 26
RJFTV with Self Closing Cap (SCC) ..... 29
RJFTV: Receptacles and plugs with 360° EMI backshells ..... 30
RJFTV: Through bulkhead receptacles ..... 32
RJFTV: Stand off receptacles ..... 33
NEW RJF-RJFTV: Environmentaly & transversally sealed receptacles ..... 36
NEW RJF/RJFTV: Hermetic receptacles ..... 37
NEW RJFTV for big insulation wire up to 1.6 mm ..... 38
RJ45/M12 adaptor ..... 39
Special RJ45 adaptor for Military & Commercial Aeronautics ..... 40
High Reliability Cat5E Ethernet cable and cordsets ..... 41
NEW High Reliability Cat6 Ethernet cable and cordsets ..... 42
NEW High Reliability Cat6A Ethernet cable and cordsets ..... 43


### NEW Cable assemblies


RJ45/M12 Railway cable solution ..... 46
Jumper Railway intercoach ..... 47


## Rugged Electronics

### Military Ethernet Media Converter for harsh environment, fully MIL-STD compliant


NEW RES-GMC with Expanded Beam technology: Unmanaged Military Ethernet Media Converter - 2 Gigabit ports ..... 50
RES-GMC with Butt Joint Fiber connector: Unmanaged Military Ethernet Media Converter - 2 or 4 Gigabit ports ..... 52
RES-GMC-1M-FORC: Military Ethernet Media Converter with Remote Control ..... 54


### Military Ethernet Switch for harsh environment, fully MIL-STD compliant


NEW RES-SCE-AC-8US: Unmanaged Miniature Portable Ethernet Switch - 8 Fast ports ..... 56
RES-SCE-8MG: Managed Miniature Portable Ethernet Switch - 8 Gigabit ports ..... 58
RESMLAC-8US-CAPS: Unmanaged Military Ethernet Switch, MIL-DTL-38999 connectors - 8 Fast ports ..... 60
RJSMLAC-8UG-CAPS: Unmanaged Military Ethernet Switch, MIL-DTL-38999 connectors - 8 Gigabit ports ..... 62
RJSMLAC-8MG-CAPS: Managed Military Ethernet Switch, RJFTV connectors - 8 Gigabit ports ..... 64
RESMLAC-8MG-CAPS: Managed Military Ethernet Switch, MIL-DTL-38999 connectors - 8 Gigabit ports ..... 66
RESMLAC-8MG-CAPS F35: Managed Military Ethernet Switch, MIL-DTL-38999 connectors - 8 Gigabit ports ..... 68
RESMLAC-28MG: Managed Military Ethernet Switch - 24 Gigabit + 4 combo 10G ports ..... 70


### Military Ethernet Switch for harsh environment with industrial EMI compliancy


RJSML-8US1 and RJSML-8UG1: Unmanaged Military Ethernet Switch, Fast or Gigabit ..... 73
RJSML-MG7F3G : Managed Military Ethernet Switch - 7 Fast ports + 3 Gigabit ports ..... 77


### Industrial Ethernet Switch for harsh environment


RJSPC: Unmanaged or Ring Industrial Ethernet Switch - 5 Fast ports ..... 81

## Rugged USB solutions (USB3.0 & USB2.0)

### Field installable


**USB3.0**

NEW USB3FTV (USB-A) ....86
NEW USB3F TV - Transversally sealed receptacles ....90
NEW USB3F TV - Hermetic receptacles ....93
NEW USB3 receptacle with Self Closing Cap ....94
NEW Metallic Self Closing Cap (SCC) for USB3F TV square flange receptacles ....95
NEW High reliability USB 3.0 cordsets ....96

**USB2.0**

USBFTV (USB-A) ....97
NEW USBF TV - Transversally sealed receptacles ....100
USBF TV Hermetic receptacles ....102
USBFTV - Receptacles with 360° EMI backshells ....103
NEW USBF TV Through bulkhead ....104
NEW USBF TV Stand off receptacles ....105
USB 2.0 receptacle with Self Closing Cap (SCC) ....107
Metallic Self Closing Cap (SCC) for USBF TV square flange receptacles ....108
High reliability USB 2.0 cordsets ....109
USBF SC - Quick release series ....110
USBBF TV (USB-B) ....112
USBBF TV Stand off receptacles ....115
USBBF TV - Transversally sealed receptacles ....117
NEW USBB receptacle with Self Closing Cap ....118
Metallic Self Closing Cap (SCC) for USBB square flange receptacles ....119
NEW Special USB adaptor for Military & Commercial Aeronautics ....120


### Cable assemblies


USB-A plastic & neoprene solutions with Self Closing Cap (SCC) ....122
USB-B Field plastic - Overmolded cordset plug ....125


### Rugged Electronics


NEW Reinforced USBFTV memory keys ....128
Reinforced USB memory keys ....129
NEW Reinforced USB amplifier ....130


### ATEX Solutions


RJFTVX, USBFTVX, RJ11FTVX - RJ45, USB, RJ11/12 explosion proof solutions for Zone 2 ....132
RJSPCEX Atex Zone 2 Rugged & IP68 ....138


## Other Rugged solutions

### Field installable


FWFTV: metallic circular shell based on MIL-DTL-38999 series III - thread coupling with anti-decoupling device ....140
IEEE1394 receptacle with Self Closing Cap ....143
RJ11F: metallic circular shell based on MIL-DTL-26482 H - bayonet coupling ....144
Special RJ11 adaptor for Military & Commercial Aeronautics ....146
MTRJF TV: metallic circular shell based on MIL-DTL-38999 series III - thread coupling with anti-decoupling device ....148
LC Field: metallic circular shell based on MIL-DTL-38999 series III - thread coupling with anti-decoupling device ....150

**Glossary** ....152

# RUGGED ETHERNET SOLUTION SELECTION GUIDE

FIELD INSTALLABLE

| Connectors | Series | Indust. Ethernet Spec. | Coupling Mechanism | Shape | Material | Specification | Prime Market | Page |
|---|---|---|---|---|---|---|---|---|
| | RJF RB | | Reverse Bayonet | Circular | Plastic | N/A | Industrial & Telecom | 10 |
| | RJF544 | IEC 60603-7 variant 12 | Push Pull | Circular | Plastic | N/A | Industrial & Telecom | 13 |
| | RJF EZ | IEC 60603-7 variant 13 | Lever | Rectangular | Plastic | N/A | Industrial & Telecom | 15 |
| | RJF | IEC 60603-7 variant 11 | Bayonet | Circular | Metal | MIL-DTL-26482 | Industrial Mil/Aero | 17 |
| | RJF Special | IEC 60603-7 variant 11 | Bayonet | Circular | Metal | MIL-DTL-26482 | Industrial Mil/Aero | 20 |
| NEW | RJF Receptacles - Plugs with 360° EMI backshells | | Bayonet | Circular | Metal | MIL-DTL-26482 | Industrial Mil/Aero | 21 |
| | RJF Environmentaly Sealed Transversally Sealed | | Bayonet | Circular | Metal | MIL-DTL-26482 | Mil/Aero & Industrial | 22 |
| | RJF Hermetic Receptacles | | Bayonet | Circular | Metal | MIL-DTL-26482 | Mil/Aero & Industria | 23 |
| NEW | RJF For big insulation wire up to 1.6mm [0.062 inch] | | Bayonet | Circular | Metal | MIL-DTL-26482 | Industrial Mil/Aero | 24 |
| | RJFTV | | Thread | Circular | Metal | MIL-DTL-38999 Series III | Mil/Aero & Rail Mass Transit | 26 |
| | RJF TV Receptacles - Plugs with 360° EMI backshells | | Thread | Circular | Metal | MIL-DTL-38999 Series III | Mil/Aero & Rail Mass Transit | 30 |
| | RJF TV Special Through bulkhead | | Thread | Circular | Metal | MIL-DTL-38999 Series III | Mil/Aero & Rail Mass Transit | 32 |
| | RJF TV Special PCB Stand-Off | | Thread | Circular | Metal | MIL-DTL-38999 Series III | Mil/Aero & Rail Mass Transit | 33 |
| | RJFTV Environmentaly Sealed, Transversally Sealed | | Bayonet or Thread | Circular | Metal | MIL-DTL-38999 Series III | Mil/Aero & Industrial | 36 |
| | RJFTV Hermetic Receptacles | | Bayonet or Thread | Circular | Metal | MIL-DTL-38999 Series III | Mil/Aero & Industrial | 37 |
| NEW  | RJF TV For big insulation wire up to 1.6 mm | | Bayonet or Thread | Circular | Metal | MIL-DTL-38999 Series III | Mil/Aero | 38 |
| NEW | RJ45/M12 Adaptors | | | Circular | Metal | | Industrial & Rail Mass Transit | 39 |
| NEW | Special RJ45 adaptor for Military & Commercial Aeronautics | | | Circular | Metal | | Industrial & Rail Mass Transit | 40 |

## FIELD INSTALLABLE

| Cables | Series | Indust. Ethernet Spec. | Coupling Mechanism | Shape | Material | Specification | Prime Market | Page |
|---|---|---|---|---|---|---|---|---|
| | High reliability **Cat 5E** cable and cordsets | | | | | | Mil/Aero & Industrial | 41 |
| NEW | High reliability **Cat 6** cable and cordsets | | | | | | Mil/Aero & Industrial | 42 |
| NEW | High reliability **Cat 6A** cable and cordsets | | | | | | Mil/Aero & Industrial | 43 |

## CABLE ASSEMBLIES

| Connectors | Series | Indust. Ethernet Spec. | Coupling Mechanism | Shape | Material | Specification | Prime Market | Page |
|---|---|---|---|---|---|---|---|---|
| NEW | RJ45/M12 Railway Cable Solution | | Bayonet | Circular | Metal | MIL-DTL-26482 | Industrial & Rail Mass Transit | 46 |
| NEW | Jumper | | Thread | Circular | Metal | MIL-DTL-38999 Series III | Rail Mass Transit | 47 |

## RUGGED ELECTRONICS

| Connectors | Series | Sealing | Type | # of ports | Specification | Prime Market | Page |
|---|---|---|---|---|---|---|---|
| NEW | RES-GMC Media converter with Expanded Beam Tech. | IP67/68 | Unmanaged | 2 Gb ports | | Mil/Aero | 50 |
| NEW | RES-GMC Media converter with Butt Joint Fiber connect. | IP67/68 | Unmanaged | 2 or 4 Gb ports | | Mil/Aero | 52 |
| NEW | RES-GMC-1M-FORC Media converter with Remote Control | IP67/68 | Unmanaged | 1 Gb port + 1 Fiber port | | Mil/Aero | 54 |
| NEW | RES-SCE-AC-8US miniature portable switch | IP67/68 | Unmanaged | 8 Fast ports | | Mil/Aero | 56 |
| NEW | RES-SCE-AC-8MG miniature portable switch | IP67/68 | Managed | 8 Gb ports | | Mil/Aero | 58 |
| NEW | RESMLAC-8US-CAPS military Ethernet switch MIL-DTL-38999 connectors | IP67/68 | Unmanaged | 8 Fast ports | | Mil/Aero | 60 |
| NEW | RJSMLAC-8UG-CAPS military Ethernet switch MIL-DTL-38999 connectors | IP67/68 | Unmanaged | 8 Gb ports | | Mil/Aero | 62 |
| NEW | RJSMLAC-8MG-CAPS military Ethernet switch RJFTV connectors | IP67/68 | Managed | 8 Gb ports | | Mil/Aero | 64 |
| NEW | RESMLAC-8MG-CAPS military Ethernet switch MIL-DTL-38999 connectors | IP67/68 | Managed | 8 Gb ports | | Mil/Aero | 66 |
| NEW | RESMLAC-8MG-CAPS-F35 military Ethernet switch MIL-DTL-38999 connectors | IP67/68 | Managed | 8 Gb ports | | Mil/Aero | 68 |
| NEW | RESMLAC-28MG military Ethernet switch | IP67/68 | Managed | 24 Gb + 4 combo 10G ports | | Mil/Aero | 70 |
| | RJSML-8US1 & RJSML-8UG1 military Ethernet switch | IP67/68 | Unmanaged | 8 Gb ports | | Mil/Aero | 73 |
| | RJSML-MG7F3G military Ethernet switch | IP67/68 | Managed | 7 fast + 3 Gb ports | | Mil/Aero | 77 |
| | RJSPC industrial Ethernet switch *For ATEX version, see page 138* | IP67/68 | Unmanaged | 5 fast ports | | Industrial | 81 |

# RUGGED USB SOLUTION SELECTION GUIDE

FIELD INSTALLABLE

| Connectors | Series | Coupling Mechanism | Shape | Material | Specification | Prime Market | Page |
|---|---|---|---|---|---|---|---|
| NEW | USB3FTV (USB-A) | Thread | Circular | Metal | MIL-DTL-38999 Series III | Mil/Aero, Rail Mass Transit & Industrial | 86 |
| NEW | USB3F TV Transversally Sealed Receptacles | Thread | Circular | Metal | MIL-DTL-38999 Series III | Mil/Aero, Rail Mass Transit & Industrial | 90 |
| NEW | USB3F TV Hermetic receptacles | Thread | Circular | Metal | MIL-DTL-38999 Series III | Mil/Aero & Industrial | 93 |
| NEW 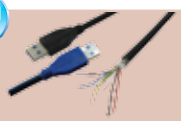 | High reliability USB 3.0 Cordsets | | | | | Mil/Aero, Rail Mass Transit & Industrial | 96 |
| | USBFTV (USB-A) | Thread | Circular | Metal | MIL-DTL-38999 Series III | Mil/Aero, Rail Mass Transit & Industrial | 97 |
| | USBF TV Transversally Sealed Receptacles | Thread | Circular | Metal | MIL-DTL-38999 Series III | Mil/Aero, Rail Mass Transit & Industrial | 100 |
| | USBF TV Hermetic receptacles | Thread | Circular | Metal | MIL-DTL-38999 Series III | Mil/Aero & Industrial | 102 |
| | USBF TV special Receptacles with 360° EMI backshells | Thread | Circular | Metal | MIL-DTL-38999 Series III | Mil/Aero, Rail Mass Transit & Industrial | 103 |
| | Special USB version USB Through Bulkhead | Thread | Circular | Metal | MIL-DTL-38999 Series III | MII/Aero & Industrial | 104 |
| | USBF TV Stand-Off receptacles | Thread | Circular | Metal | MIL-DTL-38999 Series III | Mil/Aero, Rail Mass transit & Industrial | 105 |
| | High reliability USB 2.0 Cordsets | | | | | Mil/Aero, Rail Mass Transit & Industrial | 109 |
| | USBF SC Quick release series | Spring Release | Circular | Metal | N/A | Mil/Aero & Industrial | 110 |
| | USBBF TV (USB-B) | Thread | Circula | Metal | MIL-DTL-38999 Series III | Mil/Aero, Rail Mass Transit & Industrial | 112 |
| | USBBF TV Stand-off receptacles | Thread | Circular | Metal | MIL-DTL-38999 Series III | Mil/Aero, Rail Mass Transit & Industrial | 115 |
| | USBBF TV Transversally Sealed Receptacles | Thread | Circular | Metal | MIL-DTL-38999 Series III | Mil/Aero, Rail Mass Transit & Industrial | 117 |
| | Special USB adaptor for Military & Commercial Aeronautics | Circular | Metal | | | Aeronautic | 120 |

| | Connectors | Series | Coupling Mechanism | Shape | Material | Specification | Prime Market | Page |
|---|---|---|---|---|---|---|---|---|
| CABLE ASSEMBLIES | | USB-A plastic with Self Closing Cap | | Circular | Plastic | N/A | Industrial & Telecom | 122 |
| | | USB B Field Plastic shell Overmolded cordset plug | Thread | Circular | Plastic | N/A | Industrial & Telecom | 125 |
| RUGGED ELECTRONICS | | Reinforced USBF TV Memory Keys | Thread | Circular | Metal | MIL-DTL-38999 Series III | Mil/Aero & industrial | 128 |
| | | Reinforced USB Memory Keys | Bayonet | Circular | Metal | N/A | Mil/Aero & Industrial | 129 |
| | NEW | Reinforced USB 2.0 amplifier | Thread | Circular | Metal | MIL-DTL-38999 Series III | Mil/Aero & Industrial | 130 |

# RUGGED ATEX ZONE 2 SOLUTION GUIDE

| | Connectors | Series | Coupling mechanism | Shape | Material | Specification | Prime Market | Page |
|---|---|---|---|---|---|---|---|---|
| RUGGED ELECTRONICS | | RJFTVX, USBFTVX RJ11FTVX | IP68 | Metal & Plastic | | | Factory Automation, Video, Oil & Gaz | 132 |

| Connectors | Series | Sealing | Material | Number of ports | Unmanaged | Ring | Prime Market | Page |
|---|---|---|---|---|---|---|---|---|
| | RJSPCEX | IP68 | Plastic | 5 | X | X | Oil & Gas | 138 |

# OTHER RUGGED SOLUTIONS

| | Connectors | Series | Coupling Mechanism | Shape | Material | Specification | Prime Market | Page |
|---|---|---|---|---|---|---|---|---|
| FIELD INSTALLABLE | | FWFTV (FireWire) | Thread | Circular | Metal | MIL-DTL-38999 Series III | Mil/Aero & Video | 140 |
| | | RJ11F (RJ11) | Bayonet | Circular | Metal | MIL-C-26482 | MIL/Aero & Industrial | 144 |
| | NEW | Special RJ11 adaptor for Military & Commercial Aeronautics | | Circular | Metal | | Aeronautic | 146 |
| | | MTRJFTV (MTRJ) | Thread | Circular | Metal | MIL-DTL-38999 Series III | Mil/Aero & Rail Mass Transit | 148 |
| | | LC Field | Thread | Circular | Metal | MIL-DTL-38999 Series III | Mil/Aero & Rail Mass Transit | 150 |

NOTES

# Rugged Ethernet Solutions

## Field installable

## Table of contents


RJF RB: plastic circular shell - reverse bayonet coupling ..... 10
RJF544: plastic circular shell - push pull coupling ..... 13
RJF EZ: plastic rectangular shell - lever coupling ..... 15
RJF: metallic circular shell based on MIL-DTL-26482 H - bayonet coupling ..... 17
RJF special receptacles: cable mount inline & PCB tails receptacles ..... 20
NEW RJF - Receptacles & plugs with 360° EMI backshells ..... 21
NEW RJF - Environmentaly sealed, transversally sealed receptacles ..... 22
RJF - Hermetic receptacles ..... 23
RJF for big insulation wire up to 1.6 mm [0.062 inch] ..... 24
Self Closing Cap (SCC) for RJ Field receptacles ..... 25
RJF TV: metallic circular shell based on MIL-DTL-38999 series III - thread coupling with anti-decoupling device ..... 26
RJF TV Self Closing Cap (SCC) ..... 29
RJF TV receptacles and plugs with 360° EMI backshells ..... 30
RJF TV Through bulkhead receptacles ..... 32
RJF TV Stand off receptacles ..... 33
NEW RJF TV - Environmentaly sealed, Transversally sealed receptacles ..... 36
NEW RJF TV Hermetic receptacles ..... 37
NEW RJF TV for big insulation wire up to 1.6 mm ..... 38
RJ45/M12 adaptators ..... 39
Special RJ45 adaptators for Military & Commercial Aeronautics ..... 40
High reliability Cat 5E Ethernet cable & cordsets ..... 41
NEW High reliability Cat 6 Ethernet cable & cordsets ..... 42
NEW High reliability Cat 6A Ethernet cable & cordsets ..... 43

# RJF RB

## Ethernet connection system for harsh environment – Industrial Ethernet

IDC Receptacle
**CAT 6**

PCB Receptacle

RJFRB allows you to use an Ethernet Class D / Cat 5e and Class E / Cat 6 connection for 10 BaseT, 100 BaseTX or 1000 BaseT networks in harsh environments.
With the patented RJStop® system you can use a standard RJ45 cordset in a protective **composite** plug which will protect it from shocks, dust and fluids.
**No hazardous on-field cabling and grounding!**

### Applications

- Telecom equipments
- Video control
- Robotics
- Industrial process control
- CNC machines
- Special machines
- Motion control

### Main characteristics

- Sealed against fluids and dust (IP68)
- Shock, vibration and traction resistant
- No cabling operation in field, no tools required
- **Reverse bayonet coupling**
- RJ45 cordset retention in the plug: 70 N in the axis
- Mating cycles: 500 min
- Compatible with cable diameter from 5,5 mm [0.216 in] to 7 mm [0.275 in]

### Environmental protection

- Sealing: IP68
- Salt spray > 1000 h
- Fire retardant / Low smoke: UL94 V0 and NFF 16102, DIN 5510-2
- Thermal shock: 5 cycles at - 40°C / +100°C
- Operating temperature: - 40°C / +85°C

### Data transmission

10 BaseT, 100 BaseTX and 1000 BaseT networks
Cat 5e per TIA/EIA 568B and ClassD per ISO/IEC 11801
Cat6 per TIA/EIA 568B and ClassE per ISO/IEC 11801

### Part number code

| RJF RB | 7 | 1RA |
|---|---|---|
| **Shell type**<br>**6**: composite reverse bayonet plug, plastic gland<br>**7**: composite jam nut receptacle | | |
| **Back terminations** *(for receptacles only)*<br>**1**: female RJ45<br>**1RA**: right angle female RJ45<br>**2**: RJ45 Cordset<br>**3U**: IDC cat6 - unshielded<br>**3F**: IDC cat6 - partial shielding<br>**3S**: IDC cat6 - 100% shielded<br>**5**: straight PCB | | |
| **Cordset length** *(for receptacles with "2" back termination only)*<br>**03 100BTX**: 0.3m *[11.81 inches]*<br>**05 100BTX**: 0.5m *[19.68 inches]*<br>**10 100BTX**: 1m *[39.37 inches]*<br>**15 100BTX**: 1.5m *[59.05 inches]* | | |
| **Remark: cabling configuration** → 100 BTX = 568B (Ethernet specification) | | |

*Examples:*
- Plug: RJF RB 6
- Receptacle, female RJ45 Back termination: RJF RB 71
- Receptacle, right angle female RJ45 back termination: RJF RB 71RA
- Receptacle, 1,5m [59.05"] RJ45 cordset termination: RJF RB 72 15 100BTX

## Plug

■ Type 6 shell with plastic gland

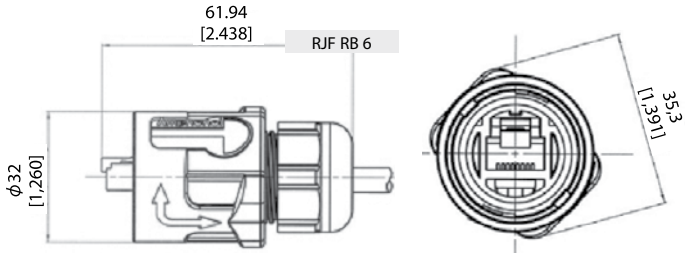


## Receptacles

■ Type 1: female RJ45
*(front mounting)*

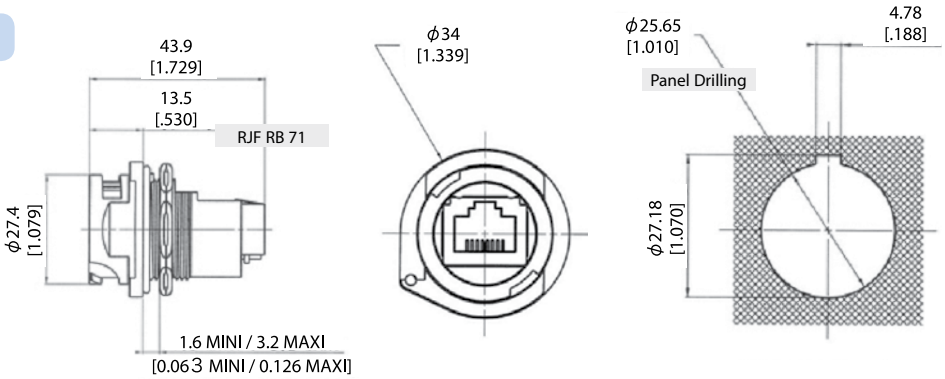


■ Type 1RA: right angle female RJ45
*(front mounting)*

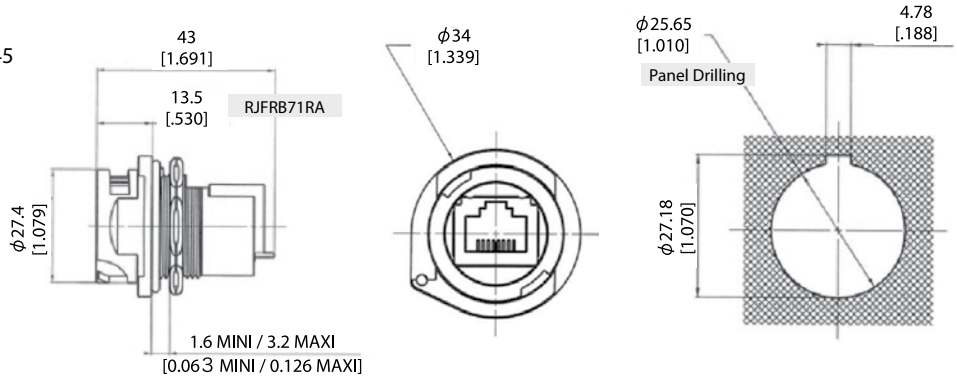


■ Type 2: RJ45 cordset
*(front mounting)*

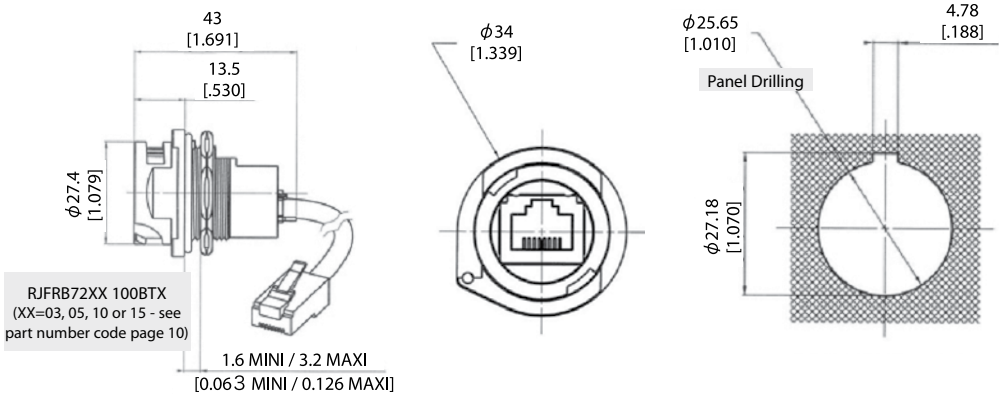


■ Type 3: IDC **CAT 6** termination
*(rear mounting)*

Unshielded: **RJF RB 73U**
Partial shielding **RJF RB 73F**

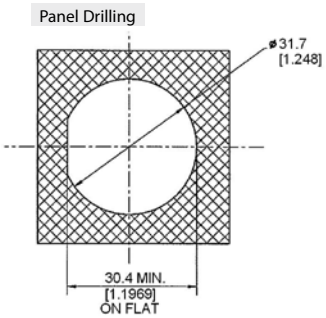

Shielded: **RJFRB73S**

Amphenol

■ Straight PCB termination receptacle:
*(rear mounting)*

**Part number:** RJF RB 75

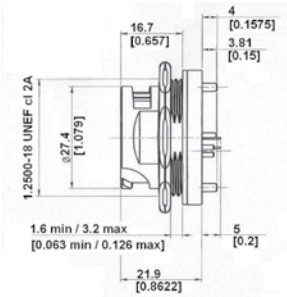


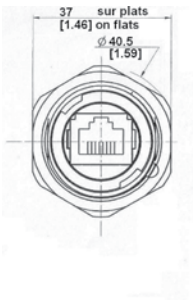


Panel Drilling

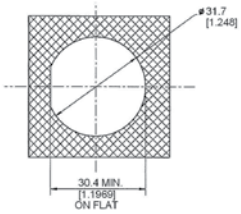


## PCB drilling RJFRB

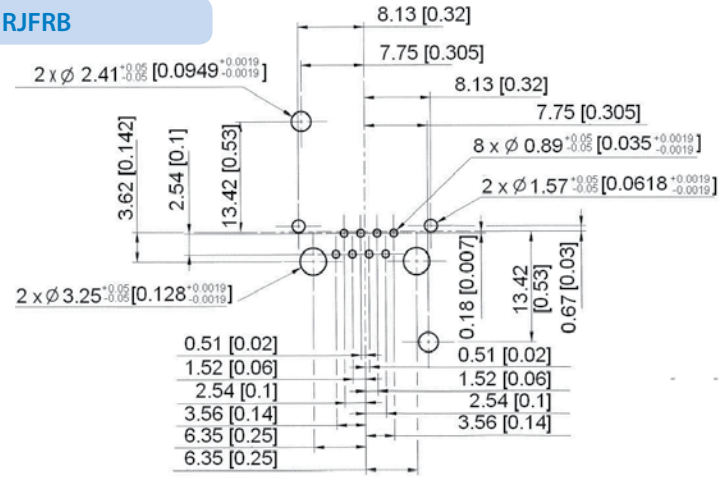


**IMPORTANT NOTE**
The customer's PCB design will determine the receptacle category.

## Assembly instructions

1

2

3

4

5

6

7

8

## Accessories

■ **IP68 Dust caps**

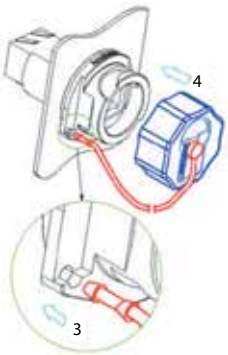


**RJF RB C7**
Cap for receptacles RJFRB71 / 71RA / 72xxx

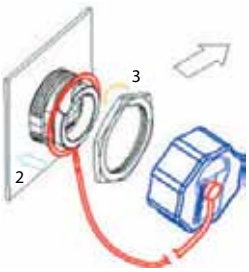


**RJF RB C75**
Cap for receptacles RJFRB75 and RJFRB73x

# RJF 544

## Ethernet connection system for harsh environment – Industrial Ethernet

**RJF544 allows you to use an Ethernet Class D / Cat 5e connection for 10 BaseT, 100 Base TX or 1000 BaseT networks in harsh environments.**
**With the patented RJStop®** system you can use a standard RJ45 cordset in a protective **composite** plug which will protect it from shocks, dust and fluids.

**No hazardous on-field cabling and grounding !**

### Applications

- Telecom equipment
- Video control
- Robotics
- Industrial process control
- CNC machines
- Special machines
- Motion control
- Tele-maintenance

**Now available with tranversal sealing***
***Seald in unmated condition**

### Main characteristics

- Compliant with IEC 60603-7 variante 12
- Shock, vibration and traction resistant
- No cabling operation in field and no tools required
- Sealed against fluids and dust (IP68)
- **Quick push pull coupling**
- RJ45 cordset retention in the plug: 100 N in the axis
- Mating cycles: 500 min
- Improved EMI Protection
- Compatible with cable diameter from 6 mm [0.236 in] to 13 mm [0.512 in]

### Environmental Protection

- Sealing: IP68
- Salt spray > 1000 h
- Fire retardant / Low smoke: UL94 V0 and NFF 16102, DIN 5510-2
- Vibrations: 10 – 500 Hz, 10 g, 3 axes: no discontinuity > 10 nano s.
- Thermal shock: 5 cycles at - 40°C / +100°C
- Operating temperature: - 40°C / +85°C

### Data Transmission

10 BaseT, 100 BaseTX and 1000 BaseT networks
Cat 5e per TIA/EIA 568B and ClassD per ISO/IEC 11801

### Part number code

| RJF 544 | 2 | 2 | 03 100BTX |
|---|---|---|---|
| **Shell type**<br>**6**: composite push pull plug, plastic gland<br>**2**: composite square flange receptacle<br>**2S**: composite square flange receptacle transversally sealed<br>**2M**: metallized (Ni) composite square flange receptacle<br>**2SM**: metallized (Ni) composite square flange receptacle transversally sealed | | | |
| **Back terminations** *(for receptacles only)*<br>**1**: female RJ45<br>**1RA**: right angle female RJ45<br>**2**: RJ45 cordset | | | |
| **Cordset length** *(for receptacles with "2" back termination only) - Other lengths are available on demand*<br>**03 100BTX**: 0.3 meters *[11.81 inches]*<br>**05 100BTX**: 0.5 meters *[19.68 inches]*<br>**10 100BTX**: 1 meter *[39.37 inches]*<br>**15 100BTX**: 1.5 meters *[59.05 inches]*<br>**00**: 8 tinned holes at the rear of the PCB to solder the cable | | | |
| **Remark: cabling configuration** → 100 BTX = 568B (Ethernet specification) | | | |

*Examples:*
- Plug: RJF 544 6
- Square flange receptacle, female RJ45 back termination: RJF 544 21
- Metallized square flange receptacle, female RJ45 back termination: RJF 544 2M 1
- Square flange receptacle, 1,5m [59.05"] 100 BTX cordset termination: RJF 544 22 15 100BTX
- Square flange receptacle, solder termination: RJF 544 22 00
- Transversally sealed receptacle female RJ45 back termination: RJF544 2S1

## Plug

- Type 6 shell with plastic gland

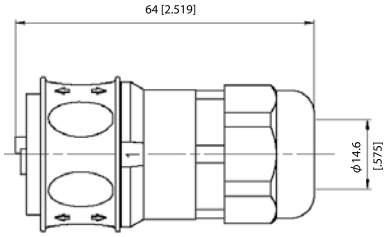


RJF 544 6

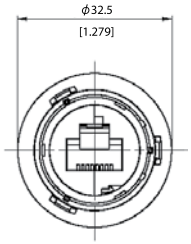


## Receptacle

- Type 2S/2M/2SM shell: square flange receptacle with 4 mounting holes

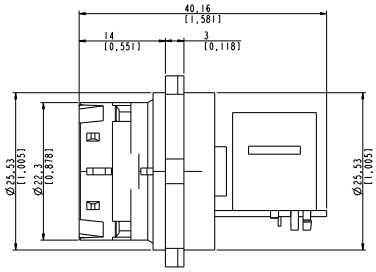


RJF 544 2x 1 RA

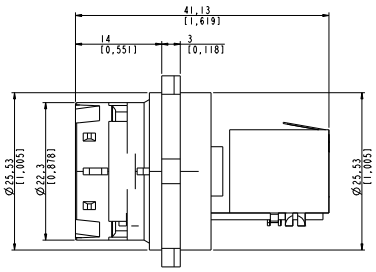


RJF 544 2x 1

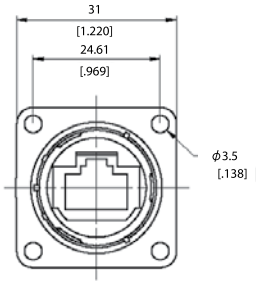


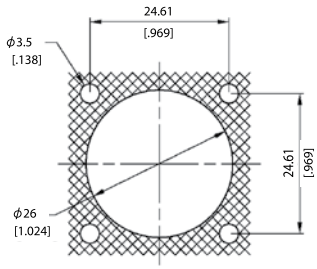


Panel Drilling
(same as#16 MIL-C-5015)

## Back terminations

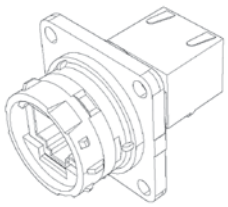

Type1: female RJ45

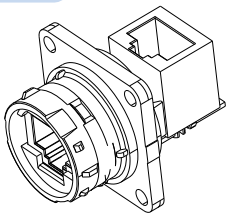

Type1RA: right angle female RJ45

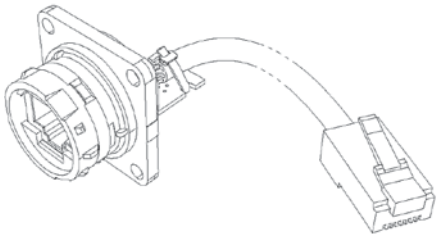

Type2: RJ45 cordset

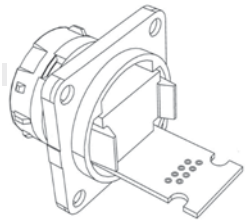

Type 2 - 00: solder - 8 tinned holes

**Notes:** type 2 without RJ45 plug at the end of the cable is also available: consult factory

## Accessories

- **Rubber IP68 receptacle cap p/n RJF 544BESC**

- **Panel gasket p/n RJF 544 02JE**

- **IP68 caps for plug p/n 544 02 BM**

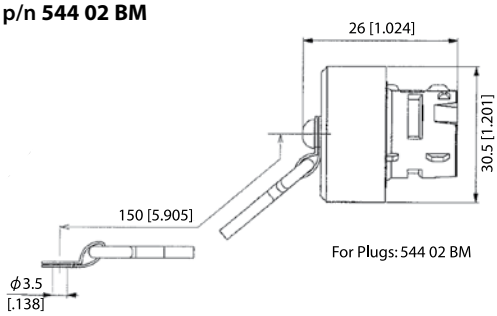


For Plugs: 544 02 BM

- Panel gasket (thickness: 0.6mm [.039]): p/n **RJF 544 02 JE**
- Plug Insert removal tool: p/n **5440 OT 02**

# RJF EZ

## Ethernet connection system for harsh environment – Industrial Ethernet

RJFEZ allows you to use an Ethernet Class D / Cat. 5e connection for 10 BaseT,100 BaseTX or 1000 BaseT networks in harsh environments. With the patented RJStop® system you can use a standard RJ45 cordset in a protective **composite** plug which will protect it from shocks, dust and fluids.
**No hazardous on-field cabling and grounding!**

### Applications

- Telecom equipment
- Video control
- Robotics
- Industrial process control
- CNC machines
- Special machines
- Motion control
- Tele-maintenance

### Main characteristics

- Compliant with IEC 60603-7 variante 13
- Sealed against fluids and dust (IP68)
- Shock, vibration and traction resistant
- No cabling operation in field and no tools required
- **Quick lever coupling**
- RJ45 cordset retention in the plug: 70 N in the axis
- Mating cycles: 500 min
- Compatible with cable diameter from 5,5 mm [0.216 in] to 7 mm [0.275 in]

### Environmental protection

- Sealing: IP68
- Salt spray > 1000 h
- Fire retardant / Low smoke: UL94 V0 and NFF 16102, DIN 5510-2
- Thermal shock: 5 cycles at - 40°C / +100°C
- Operating temperature: - 40°C / +85°C

### Data transmission

10 BaseT, 100 BaseTX and 1000 BaseT networks
Cat 5e per TIA/EIA 568B and ClassD per ISO/IEC 11801

### Part number code

| | RJF EZ | 2 | 2 | 03 100BTX |
|---|---|---|---|---|
| **Shell type**<br>**6**: composite lever plug, plastic gland<br>**2**: composite square flange receptacle | | | | |
| **Back terminations** *(for receptacles only)*<br>**1**: female RJ45<br>**2**: RJ45 cordset | | | | |
| **Cordset length** *(for receptacles with "2" back termination only)*<br>**03 100BTX**: 0.3m [11.81 inches]<br>**05 100BTX**: 0.5m [19.68 inches]<br>**10 100BTX**: 1m [39.37 inches]<br>**15 100BTX**: 1.5m [59.05 inches] | | | | |
| **Remark: Cabling configuration** → 100 BTX = 568B (Ethernet specification) | | | | |

Examples:
- Plug: RJF EZ 6
- Receptacle, female RJ45 back termination: RJF EZ 21
- Receptacle, 1,5m [59.05"] 100 BTX cordset termination: RJF EZ 22 15 100BTX

## Plug

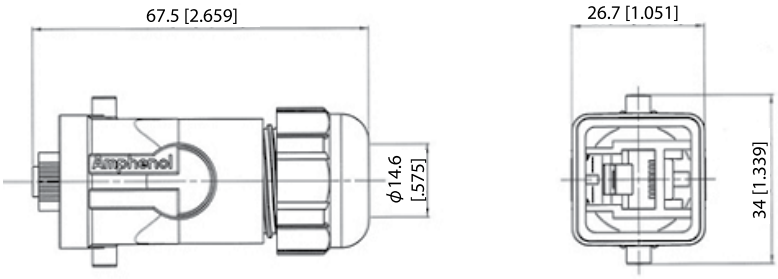


## Receptacles

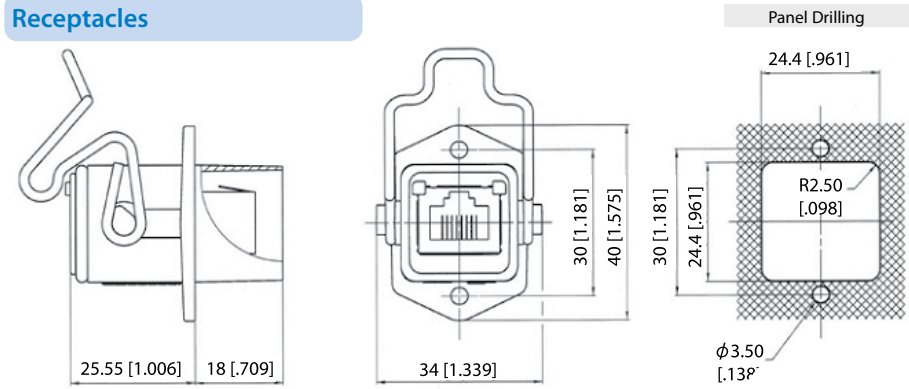


## Back terminations

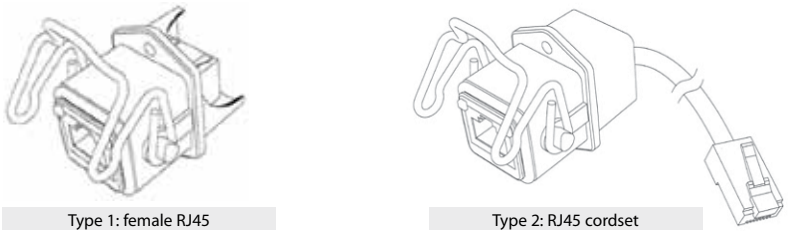

Type 1: female RJ45

Type 2: RJ45 cordset

**Notes:** type 2 without RJ45 plug at the end of the cable is also available: consult factory

## Assembly instructions

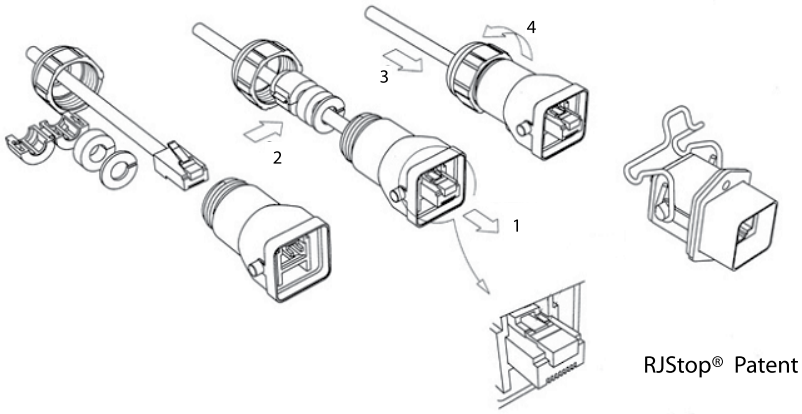


## Accessories

- **IP68 dust caps**
  For plugs: **not available**
  For receptacles: **RJF EZ BE**

- **Panel gasket**
  Thickness: 1 mm [.039]
  Part No. **RJF EZ JE**

# RJF

## Ethernet connection system for harsh environment – Industrial Ethernet

RJF allows you to use an Ethernet Class D / Cat. 5e connection for 10 BaseT,100 BaseTX or 1000 BaseT networks in harsh environments.
With the patented RJStop®system you can use a standard RJ45 cordset in a **metallic** plug which will protect it from shocks, dust and fluids.
**No hazardous on-field cabling and grounding!**

### Main characteristics

- Compliant with IEC 60603-7 variante 11
- **Bayonet coupling** ("Audible & Visual" coupling signal )
- **Robust metallic shells based on MIL-DTL-26482 H - Shell size 18**
- RJ45 cordset retention in the plug: 100 N in the axis
- Mating cycles: 500 min
- Sealed against fluids and dust (IP68)
- Shock, vibration and traction resistant
- No cabling operation in field and no tools required
- Mechanical coding / polarization (4 positions)
- Compatible with cable diameter from 6 mm [0.236 in] to 13 mm [0.512 in]
  For smaller diameters, please consult us.

### Environmental protection

- Sealing: IP68
- Salt spray: 48 h with nickel plating
  > 96 h with black coating
  < 500 h with olive drab cadmium
- Fire retardant/Low smoke: UL94 V0 and NF F 16 101 & 16 102
- Vibrations: 10-500Hz, 10g, 3 axes: no discontinuity >10 nano s
- Shocks: IK06 ►weight of 250 g drop from 40cm
  [15.75 in] onto connectors (mated pair)
- Humidity: 21 days, 43°C, 98% humidity
- Thermal shock: 5 cycles at -40°C / +100°C
- Temperature range: -40°C / +85°C
- Storage temperature:

### Applications

- Robotics
- Industrial process control
- CNC machines
- Special machines
- Oil & Gas
- Motion control
- Data acquisition and transmission in harsh environment
- Tele-maintenance

### Data transmission

10 BaseT, 100 BaseTX and 1000 BaseT networks Cat 5e per TIA/EIA 568B and ClassD per ISO/IEC 11801

### Part number code

| RJF | 2 | 2 | B | 03 100BTX |
|---|---|---|---|---|

**Shell type**
**6**: plug, plastic gland
**6M**: plug, metal gland
**2**: square flange receptacle
**2PE**: square flange receptacle, IP68 backshell, plastic gland
**2PEM**: square flange receptacle, IP68 backshell, metal gland
**7**: jam nut receptacle
**7PE**: jam nut receptacle, IP68 backshell, plastic gland
**7PEM**: jam nut receptacle, IP68 backshell, metal gland
***Nota:*** *also available a transversally sealed receptacle (unmated)* ► *see page 22*

**Back terminations** *(for receptacles only)*
**1:** female RJ45
**1RA:** right angle female RJ45
**2:** RJ45 cordset

**Shell finishes**
**B**: black Coating - *ROHS compliant*
**N**: nickel *(note: with this version, the inserts are metallized) - ROHS compliant*
**G**: olive drab cadmium *(note: with this version, the inserts are metallized)*
**BZC**: aluminium shell - black zinc cobalt plating
**ZC**: aluminium shell - green zinc cobalt plating - *ROHS compliant*

**Cordset length** *(for receptacles with "2" back termination only) - Other lengths are available on demand*
**03 100 BTX**: 0.3m *[11.81 inches]*
**05 100 BTX**: 0.5m *[19.68 inches]*
**10 100 BTX**: 1m *[39.37 inches]*
**15 100 BTX**: 1.5m *[59.05 inches]*
**00:** 8 tinned holes at the rear of the PCB to solder the cable
**OPEN**: open cable - with no plug at the end

**Remark: Cabling configuration** → 100 BTX = 568B (Ethernet specification)

*Examples:*
- Nickel plug: RJF 6 N
- Black square flange receptacle, female RJ45 back termination: RJF 2 1 B
- Olive drab cadmium jam nut receptacle, 1.5m [59.05"] 100 BTX cordset termination: RJF 7 2 G 15 100BTX
- Black in line square flange receptacle, 30cm [11.81"] 100BTX cordset termination: RJF 2PE 2 B 03 100BTX
- Nickel jam nut receptacle, solder termination: RJF 72 N 00

## Plug

■ Shell type 6 with plastic or metal gland

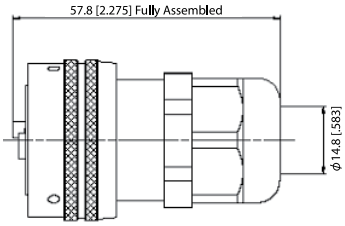


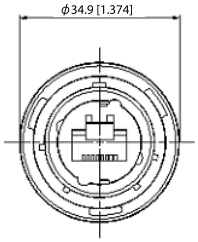


## Receptacles

■ Square flange receptacle • 4 mounting holes: shell type 2

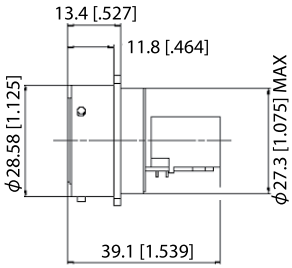


RJF 21 X (Straight Female RJ45)

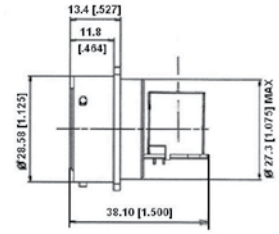


RJF 21 RA X (Right Angle Female RJ45)

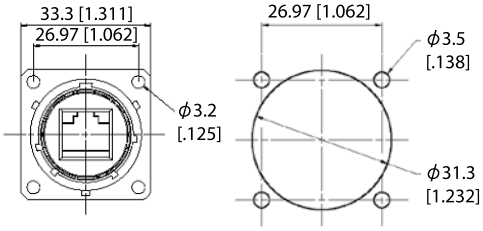


Panel Drilling

■ Jam nut receptacle • Hexagonal nut mounting: shell type 7

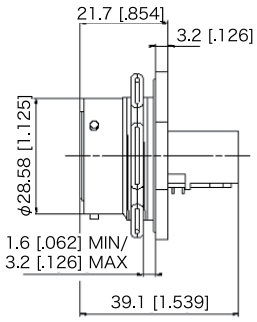


RJF 71 X (straight female RJ45)

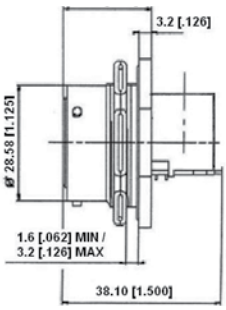


RJF 71 RA X (right angle female RJ45)

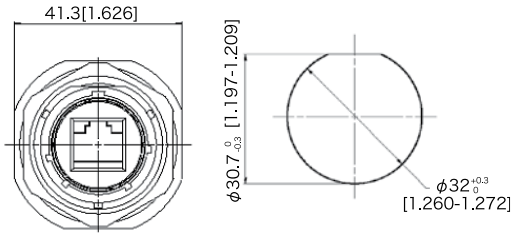


Panel drilling

■ Receptacles with IP68 backshell : shell type 2PE and 7PE with plastic or metal gland

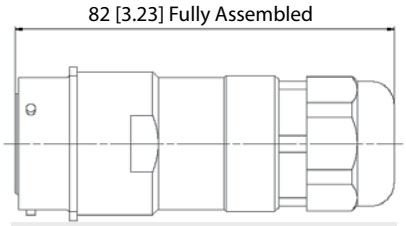


RJF 2PE/2PEM

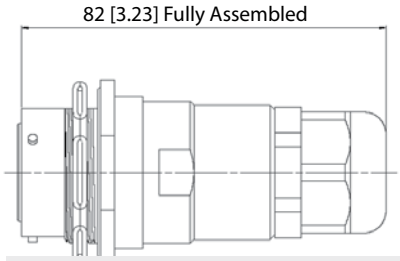


RJF 7PE/7PEM

## Back terminations

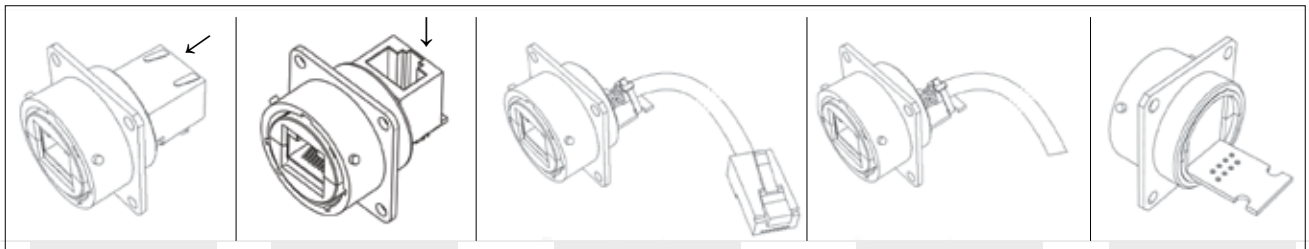

| Type **1** *Female RJ45* | Type **1RA** *Right angle female RJ45* | Type **2** *RJ45 cordset* | Type **OPEN** *No plug at the end* | Type **2 - 00** *Solder - 8 tinned holes* |
|---|---|---|---|---|

## Universal: can be used with all standard RJ45 Cat.5e cordset brands.

**Assembly instructions of the RJ Stop**

1. Push down the RJ45 cordset latch, and fix it inside the insert
2. Press in and click the other part of the insert
3. Insert in the metallic housing

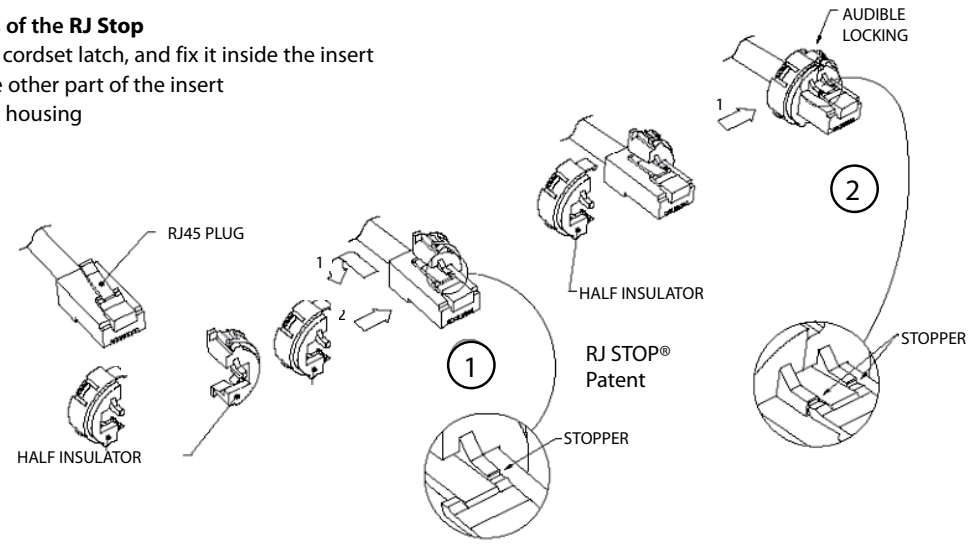


## Easy and safe - No field cabling tools required for cabling

**Assembling of the plug.**

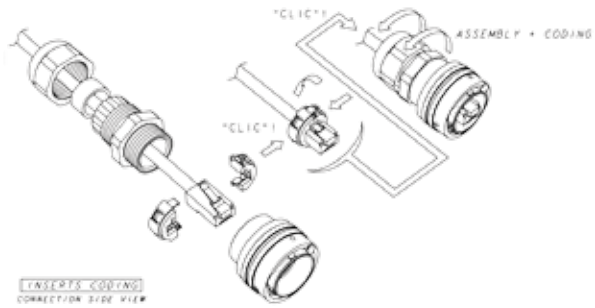


**4 codings possibilities**
**(defined by the customer during the assembling).**

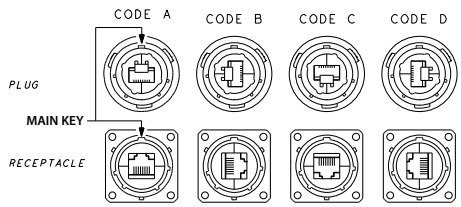


**Assembling of the receptacle.**

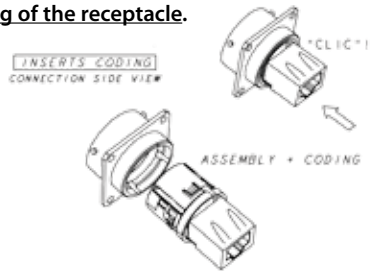


**IMPORTANT NOTE:** to remove the insert, use the

- **Insert removal tool for receptacle and plug**

P/N: **RJF ODE**

## Accessories

- **Metallic cap**

| | RJFC | 2 | G |
|---|---|---|---|
| **Connector type**<br>**6**: plug<br>**2**: square Flange Receptacle<br>**7**: jam Nut Receptacle | | | |
| **Shell material & finish**<br>**B**: black coating - *ROHS compliant*<br>**N**: aluminium shell - nickel plating - *ROHS compliant*<br>**G**: aluminium shell - olive drab cadmium plating | | | |

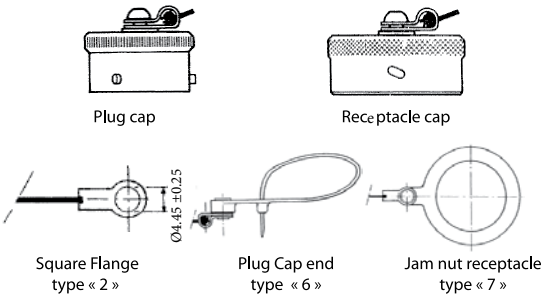


- **Panel gasket for square flange 2 »thickness - 0,6 mm**

P/N: **JE 18**

Amphenol

# RJF

## Special receptacles: cable mount inline & PC tails

### Inline cable mount receptacles

Inline receptacles allow you to make cable extensions in the field by using them with rugged RJ Field series plugs.

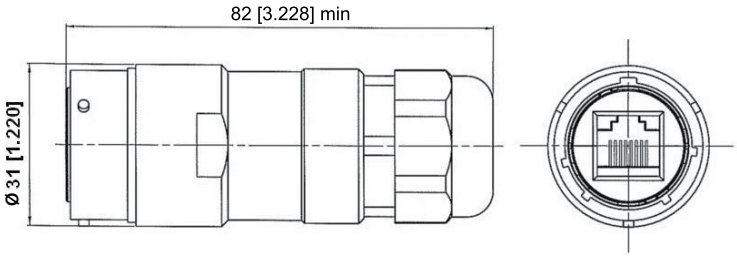


| | Plating | Plastic gland | Metallic gland |
|---|---|---|---|
| **Part number** | Black coating - *ROHS compliant* | **RJF2PEWF1B** | **RJF2PEMWF1B** |
| | Nickel - *ROHS compliant* | **RJF2PEWF1N** | **RJF2PEMWF1N** |
| | Olive drab cadmium | **RJF2PEWF1G** | **RJF2PEMWF1G** |

### PC tails receptacles

These receptacles can be soldered directly on your PCB. A compound insures a transversal sealing and good performance in high vibration environments. They can be connected with rugged RJField series plugs.

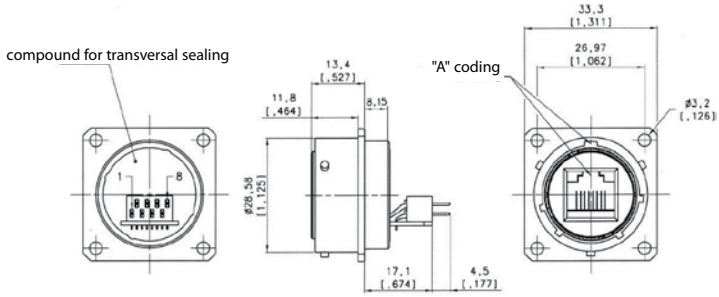


**PCB LAYOUT – SOLDER FACE VIEW**

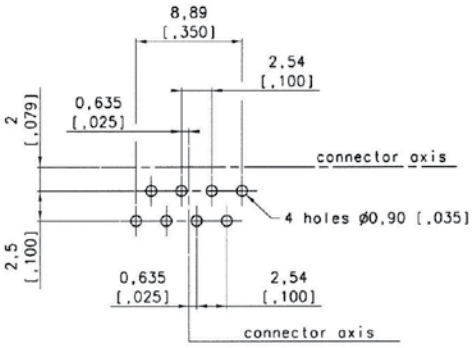


Panel Drilling

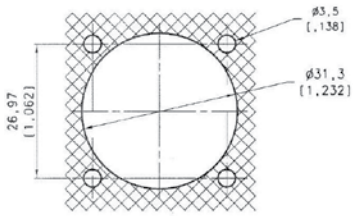


| | Plating | Part number |
|---|---|---|
| **Part number** | Black coating - *ROHS compliant* | **RJF 2S X 5B** |
| | Nickel - *ROHS compliant* | **RJF 2S X 5N** |
| | Olive drab cadmium | **RJF 2S X 5G** |

X to be replaced by the letter of the coding position you need (A, B, C, or D) ▷

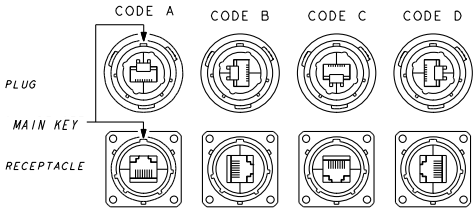

# RJF

## Receptacles & plugs with 360° EMI backshell

RJF series receptacles and plugs with EMI backshells provide a solution with 360° shielding: same protection than the one proposed by standard MIL-DTL-26482H connectors. With those solutions we recommend using our reinforced and double shielded Cat5E, Cat6, or Cat6A cable ▶ *see pages 41-42-43*.

### Square flange receptacle - *Straight backshell*

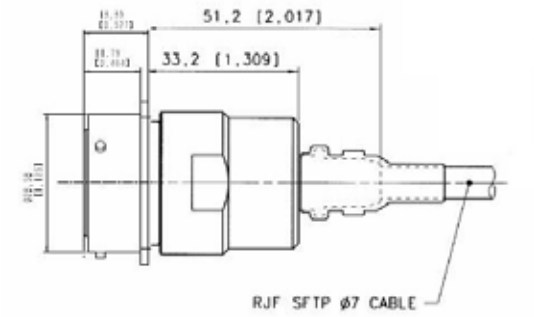


Panel Drilling

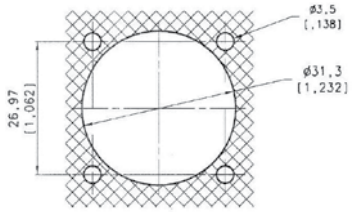


| Part number | Plating | Part number |
|---|---|---|
| | Nickel - *ROHS compliant* | **Kit30439NI** |
| | Olive drab cadmium | **Kit30439** |

**Kit30439 & Kit30439NI include:**

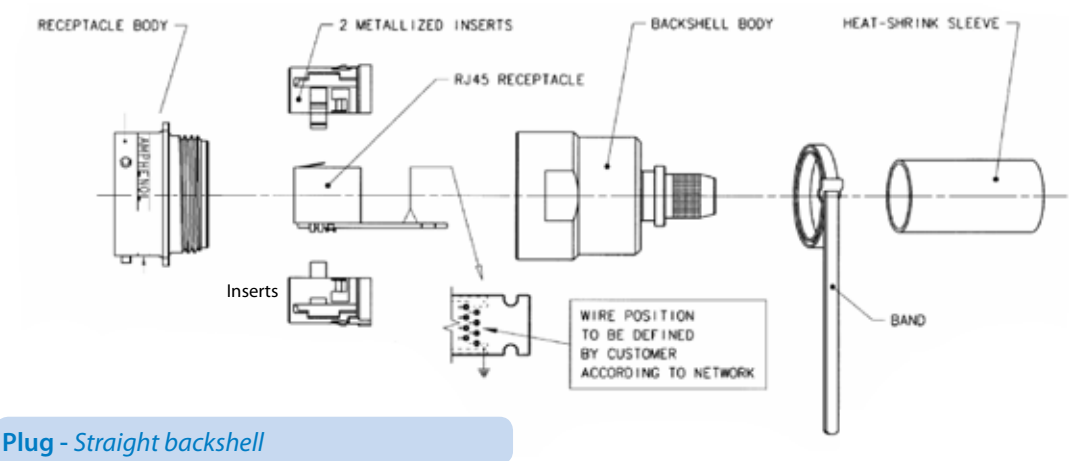


### Plug - *Straight backshell*

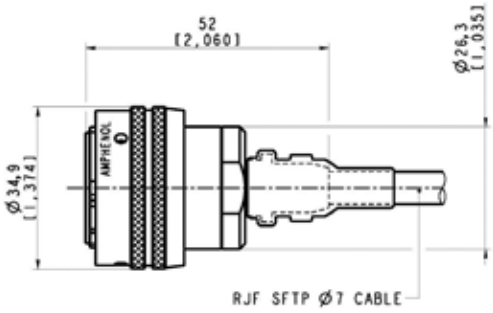


| Part number | Plating | Part number |
|---|---|---|
| | Nickel - *ROHS compliant* | **Kit30394NI** |
| | Olive drab cadmium | **Kit30394** |

**Kit30394 & Kit30394NI include:**

ROHS COMPLIANT
N, B & BZ

# RJF

## Environmentaly sealed receptacles, transversally sealed receptacles

In some applications, a transversal sealing for the receptacle is a « must ». This will prevent fluids and dust from going through the receptacle when plug or cap are not mated to the receptacle.
The sealed solution (version "S") has a compound at the rear of the receptacle as shown on the examples below. This feature is available both in RJF and RJF TV shells (please consult the relevant data sheet for product details and accessories).
In addition, the Sealed RJF TV has been successfully tested in very high vibration corresponding to airplane applications.

### Applications

- Outdoor equipment
- Airplanes equipment
- Tactical radios
- Shelters
- Rugged computers
- Data acquisition and transmission in harsh environments

### Data transmission

10 BaseT, 100 BaseTX and 1000 BaseT networks
Cat 5e per TIA/EIA 568B and ClassD per ISO/IEC 11801

### Main characteristics

- Same as the RJF and RJF TV series.
- A complete IP68 sealing of the receptacle (even with no plug or no protective cap mated) is added.
- Outside dimensions are the same as the standard RJF and RJF TV series.
- Vibrations: the compounded versions of the RJF TV have been tested in vibration following the NAS 1599 Aeronautic specification (Ambient temperature):
  5 - 3000 Hz, 20g, 2,5 mm [.1 inch] double amplitude, 3 axes, 12 hours
  Note: this specification exceeds MIL-C-26500 requirements.

### IMPORTANT NOTE

Due to the compound, the coding of the connector must be done in the factory : use the codes A, B, C or D in the part number: **see below**.

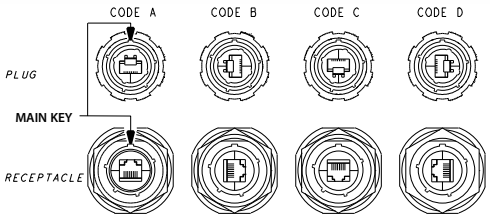

***Example :***
RJFTV 2S **A**2 G 15 100BTX

### Part number code

| | RJF | 7S | A | 2 | G | 03 100BTX |
|---|---|---|---|---|---|---|
| **Series**<br>**RJF:** MIL-DTL-26482 H bayonet | | | | | | |
| **Shell type**<br>**2S:** sealed square flange receptacle<br>**7S:** sealed jam nut receptacle | | | | | | |
| **Coding**<br>**A,B,C,D** | | | | | | |
| **Back terminations** *(for receptacles only)*<br>**1:** female RJ45<br>**1RA:** right angle female RJ45<br>**2:** RJ45 Cordset | | | | | | |
| **Shell material & finish**<br>**B:** aluminium shell - black coating - *ROHS compliant*<br>**N:** aluminium shell - nickel plating - *ROHS compliant*<br>**G:** aluminium shell - olive drab cadmium plating<br>***Nota**: for nickel and olive drab cadmium plating, receptacle inserts are metallized.* | | | | | | |
| **Cordset length** *(For Receptacles with "2" Back Termination only) - Other lengths are available on demand*<br>**03 100 BTX:** 0.3m [11.81 inches]<br>**05 100 BTX:** 0.5m [19.68 inches]<br>**10 100 BTX:** 1m [39.37 inches]<br>**15 100 BTX:** 1.5m [59.05 inches]<br>**OPEN**: open cable - with no plug at the end | | | | | | |

**Remark: cabling configuration:** 100 BTX = 568B (Ethernet specification)

*Examples:*
- *bayonet, sealed jam nut receptacle, A coding, with female RJ45 back termination, olive drab cadmium plating:* ***RJF 7SA 1 G***
- *bayonet, sealed square flange receptacle, A coding, with female RJ45 back termination, black plating:* ***RJF 2SA 1 B***
- *bayonet, sealed jam nut receptacle, A coding, 1.5m [59.05"] 100 BTX cordset, olive drab cadmium plating:* ***RJF 7SA 2 G15 100BTX***

# RJF
## Hermetic receptacles

ROHS COMPLIANT
N, B & BZ

In some applications, a transversal hermiticity for the receptacle is a « must ». This will prevent gas from going through the receptacle when plug or cap are not mated to the receptacle.
The hermetic solution (version "H") has a compound at the rear of the receptacle as shown on the examples below.
This feature is available both in RJF and RJF TV shells (please consult the relevant data sheet for product details and accessories).
Helium leakage is less than $1.10^{-6}$ $cm^3$ per second [0.1 micron cubic ft per hour] at one bar [15 psi] pressure differential.

### Applications
- Outdoor equipment
- Airplanes equipment
- Tactical radios
- Shelters
- Rugged computers
- Data acquisition and transmission in harsh environments

### Data Transmission
10 BaseT, 100 BaseTX and 1000 BaseT networks
Cat 5e per TIA/EIA 568B and ClassD per ISO/IEC 11801

### Main characteristics
- Same as the RJF and RJF TV series.
- A complete IP68 sealing of the receptacle (even with no plug or no protective cap mated) is added.
- Outside dimensions are the same as the standard RJF and RJF TV series.
- Vibrations: the compounded versions of the RJF TV have been tested in vibration following the NAS 1599 Aeronautic specification (Ambient temperature):
  5 - 3000 Hz, 20g, 2,5 mm [.1 inch] double amplitude, 3 axes, 12 hours
  Note: this specification exceeds MIL-C-26500 requirements.

### IMPORTANT NOTE
Due to the compound, the coding of the connector must be done in the factory: use the codes A, B, C or D in the part number: **see below**.

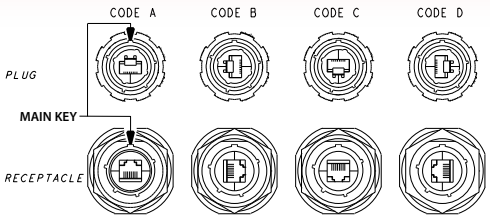

***Example :***
RJFTV 2H **A**2 N 15 100BTX

### Part number code

| | | | | | | |
|---|---|---|---|---|---|---|
| **Series**<br>**RJF:** MIL-DTL-26482 H bayonet | **RJF** | **7H** | **A** | **2** | **G** | **03 100BTX** |
| **Shell type**<br>**2H:** transversally sealed and hermetic square flange receptacle<br>**7H:** transversally sealed and hermetic jam nut receptacle | | | | | | |
| **Coding**<br>**A,B,C,D** | | | | | | |
| **Back terminations** *(for receptacles only)*<br>**1:** female RJ45<br>**1RA:** right angle female RJ45<br>**2:** RJ45 Cordset | | | | | | |
| **Shell material & finish**<br>**B:** aluminium shell - black coating - *ROHS compliant*<br>**N:** aluminium shell - nickel plating - *ROHS compliant*<br>**G:** aluminium shell - olive drab cadmium plating<br>***Nota**: for nickel and olive drab cadmium plating, receptacle inserts are metallized.* | | | | | | |
| **Cordset length** *(for receptacles with "2" back termination only) - Other lengths are available on demand*<br>**03 100 BTX:** 0.3m [11.81 inches]<br>**05 100 BTX:** 0.5m [19.68 inches]<br>**10 100 BTX:** 1m [39.37 inches]<br>**15 100 BTX:** 1.5m [59.05 inches]<br>**OPEN**: open cable - with no plug at the end | | | | | | |

**Remark: cabling configuration:** 100 BTX = 568B (Ethernet specification)

*Examples:*
- *bayonet, sealed jam nut receptacle, A coding, with female RJ45 Back termination, olive drab cadmium plating:* ***RJF 7HA 1 G***
- *bayonet, sealed square flange receptacle, A coding, with female RJ45 back termination, black plating:* ***RJF 2HA 1 B***
- *bayonet, sealed jam nut receptacle, A coding, 1.5m [59.05"] 100 BTX cordset, olive drab cadmium plating :* ***RJF 7HA 2 G15 100BTX***

# RJF

## Special plug for big insulation wire up to 1.6 mm [0.062 in]

Rugged plug dedicated to cable with insulation wire from 1,1 to 1,6 mm [from 0.043 in to 0.062 in]

**Remark**:
- Solution compatible with any RJF receptacle
- For cables which are not compatible with standard RJ45 plug.

### Applications

- Robotics
- Industrial process control
- CNC machines
- Special machines
- Oil & Gas
- Motion control
- Data acquisition and transmission in harsh environment
- Tele-maintenance

### Main characteristics

- **Bayonet coupling** ("Audible & Visual" coupling signal )
- **Robust metallic shells based on MIL-DTL-26482 H - Shell size 18**
- RJ45 cordset retention in the plug: 100 N in the axis
- Mating cycles: 500 min
- Sealed against fluids and dust (IP68)
- Shock, vibration and traction resistant
- Mechanical coding / polarization (4 positions)
- Compatible with cable diameter from 6 mm [0.216 in] to 13 mm [0.512 in], for smaller diameters, please consult us

### Environmental protection

- Sealing: IP68
- Salt Spray: 48 h with nickel plating
  > 96 h with black coating
  > 500 h with oliv drab cadmium
- Fire retardant/Low smoke: UL94 V0 and NF F 16 101 & 16 102
- Vibrations: 10 – 500 Hz, 10 g, 3 axes: no discontinuity >10 nano s.
- Shocks: IK06 ► weight of 250 g drop from 40 cm [15.75 in] onto connectors (mated pair)
- Humidity: 21 days, 43°C, 98% humidity
- Thermal shock: 5 cycles at - 40°C / +100°C
- Temperature range: - 40°C / +85°C

### Data transmission

10 BaseT, 100 BaseTX and 1000 BaseT networks
Cat 5e per TIA/EIA 568B and ClassD per ISO/IEC 11801

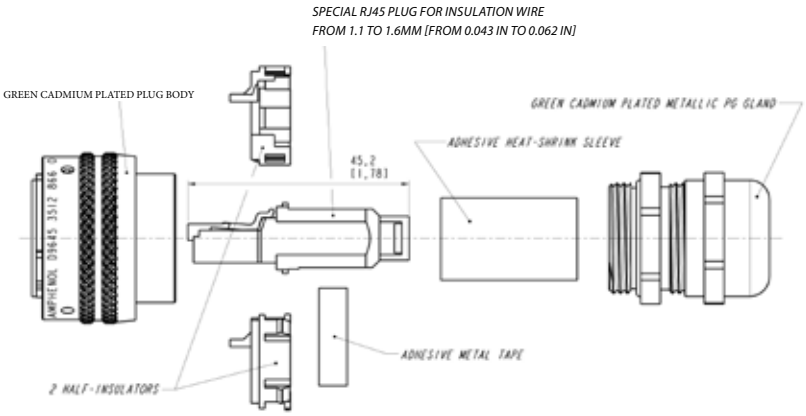


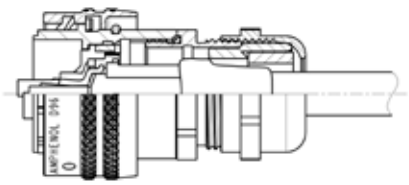

| Part number | Plating | Part number |
|---|---|---|
| | Nickel - *ROHS compliant* | **Kit39992NI** |
| | Olive drab cadmium | **Kit39992G** |

# RJ Field Receptacle with Self Closing Cap

This kit includes a receptacle and a Self Closing Cap which protects the RJ Field square flange receptacles (MIL-C-26482 type).
This cap offers a protection against dust and water projections.
A spring automatically closes the upper part of the cap when either the RJfield plug, USB or IEEE1394 cordset, or USB key are removed from the receptacle.

**Sealing level IP54**
(Splash and dust Proof)

## RJF 21 X SCC

**RJ45 version**

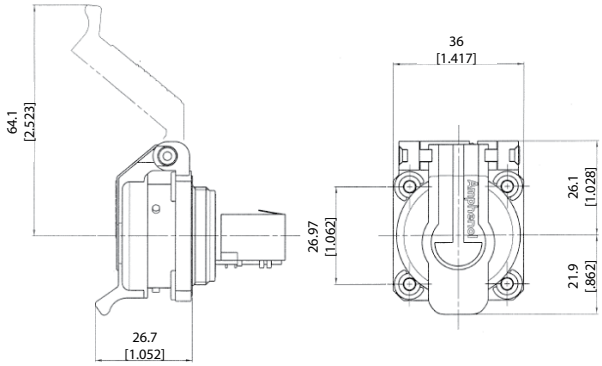


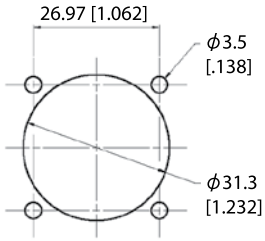


Panel Drilling

| | Plating | Metallized insert (EMI) | Part number |
|---|---|---|---|
| **Part number** * | Black coating - *ROHS compliant* | No | **RJF 21B SCC** |
| | Nickel - *ROHS compliant* | Yes | **RJF 21N SCC** |
| | Olive drab cadmium | Yes | **RJF 21G SCC** |

* *The part number includes the receptacle + the self closing cap*

**Remarks**:
- the back termination is female RJ45
- it could be used with our RJF series plug *(part number RJF6xx ► see page 17)*

■ **Note**: Panel gasket with any of these receptacles: **JE18**

## USBF 21 x SCC, USBBF 21 x SCC, & IEEE1394

**USB2.0 & 3.0 - A version**
*(see pages 94 & 107)*

**USB-B version**
*(see page 118)*

**IEEE1394 version**
*(see page 143)*

Amphenol

# RJF TV

## Ethernet connection system for harsh environment

ROHS COMPLIANT N & BZ

RJFTV allows you to use an Ethernet Class D / Cat. 5e connection for 10 BaseT, 100 BaseTx or 1000 BaseT networks in harsh environments.
With the patented RJStop system you can use a standard RJ45 cordset in a **metallic** plug which will protect it from shocks, dust and fluids.
**No hazardous on-field cabling and grounding!**

### Applications

- Data acquisition and transmission in harsh environment
- Railways
- Radars
- Shelters
- Battlefield communication
- Systems
- Navy

### Data Transmission

10 BaseT, 100 BaseTX and 1000 BaseT networks
Cat 5e per TIA/EIA 568B and ClassD per ISO/IEC 11801

### Main characteristics

- Sealed against fluids and dusts (IP68)
- Shock, vibration and traction resistant
- No cabling operation in field and no tools required
- Mechanical coding / Polarization (4 positions)
- Improved EMI protection
- **Tri Start Thread coupling mechanism (MIL-DTL-38999 series III type) with anti-decoupling device - Shell size 19**
- **Robust metallic shells**
- RJ45 cordset retention in the plug: 100 N in the axis
- Mating cycles: 500 min
- Compatible with cable diameter from 6 mm [0.236 in] to 13 mm [0.512 in], for smaller diameters please consult us

### Environmental protection

- Sealing: IP68
- Salt spray: 48h with aluminium shell - Nickel, & black zinc cobalt plating
  > 500h with aluminium shell - Olive drab cadmium plating
  500 h with marine bronze shell
- Fire retardant/Low smoke : UL94 V0 and NF F 16 101 & 16 102
- Vibrations : 10 - 500 Hz, 10 g, 3 axes: no discontinuity > 10 nano s.
- Compounded versions tested per NAS 1599 (5-3000 Hz, 20g, 12h)
- Shocks: IK06 ▸weight of 250 g drop from 40 cm [15.75 in] onto connectors (mated pair)
- Humidity: 21 days, 43°C, 98% humidity
- Thermal shock: 5 cycles at -40°C / +100°C
- Temperature range: -40°C / +85°C

### Part number code

| RJF TV | 2 | 2 | G | 03 100 BTX |
|---|---|---|---|---|

**Shell type**
**6**: plug with plastic gland
**6M**: plug with metal gland
**2**: square flange receptacle
**2PE**: square flange receptacle, IP68 backshell, plastic gland
**2PEM**: square flange receptacle, IP68 backshell, metal gland
**7**: jam nut receptacle
**7PE**: jam nut receptacle, IP68 backshell, plastic gland
**7PEM**: jam nut receptacle, IP68 backshell, metal gland
***Nota:*** *also available a transversally sealed receptacle (unmated)* ▶ *See page 36*

**Back terminations** *(receptacles only)*
**1**: female RJ45
**1RA**: right angle female RJ45
**2**: RJ45 Cordset

**Shells material & Finish**
**N**: aluminium shell - nickel plating *(receptacle inserts are metallized) - ROHS compliant*
**G**: aluminium shell - olive drab cadmium plating *(receptacle inserts are metallized)*
**BZ**: marine bronze shell *(receptacle inserts are metallized) - ROHS compliant*
**BZC**: aluminium shell - black zinc cobalt plating
**ZC**: aluminium shell - green zinc cobalt plating - *ROHS compliant*
**ZN**: aluminium shell - black zinc nickel plating - *ROHS compliant*

**Cordset length** *(type 2 back termination only) - Other lengths are available on demand*
**03 100 BTX**: 0.3m *[11.81 inches]*
**05 100 BTX**: 0.5m *[19.68 inches]*
**10 100 BTX**: 1m *[39.37 inches]*
**00**: 8 tinned holes at the rear of the PCB to solder the cable
**OPEN**: open cable - with no plug at the end

**Remark: cabling configuration** → 100 BTX = 568B (Ethernet specification)

*Examples:*
- Olive crab cadmium plug with plastic gland: RJF TV 6G
- Olive drab cadmium jam nut receptacle, female RJ45 back termination: RJF TV 71G
- Nickel jam nut receptacle, 1,5 m 100 BTX cordset back termination: RJF TV 72N 15 100BTX
- Olive drab cadmium in line square flange recept., 0,3 m 100 BTX cordset back termination: RJF TV 2PE 2 G 03 100BTX
- Nickel jam nut receptacle solder termination 8 tinned holes: RJF TV 22 N 00

## Plug

■ Shell type 6 with plastic or metal gland

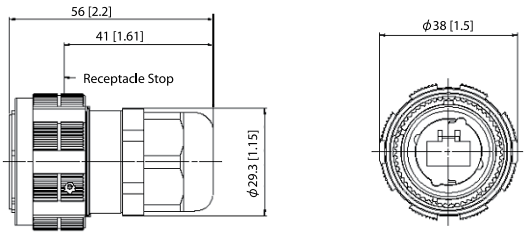


RJF TV 6 X

## Receptacles

■ Square flange receptacle - 4 mounting holes: shell type 2

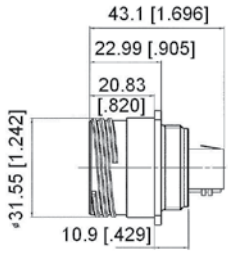


RJFTV 21 X (straight female RJ45)

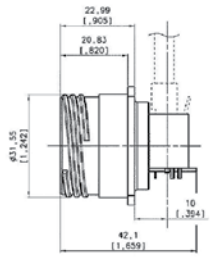

RJFTV 21 RA X (right angle female RJ45)

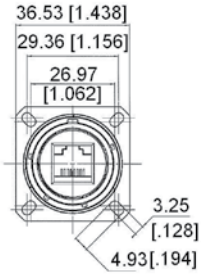


Panel Drilling

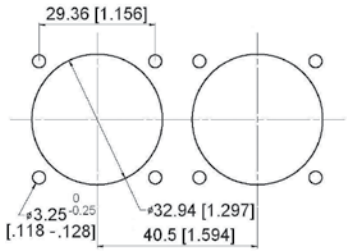


■ Jam nut receptacle - Hexagonal nut mounting: shell type 7

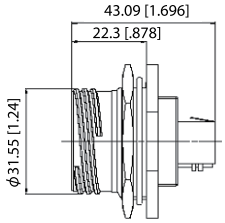


RJFTV 71 X (straight female RJ45)

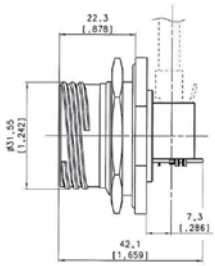

RJFTV 71 RA X (right angle female RJ45)

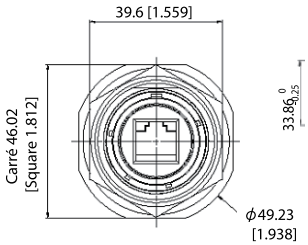


Panel drilling

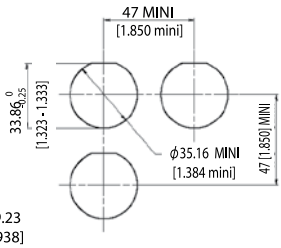


■ Receptacles with IP68 backshell: Shell type 2PE and 7PE with plastic or metal gland

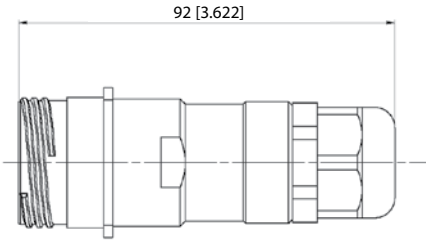


RJF TV 2PE/2PEM/7PE/7PEM

## Back terminations

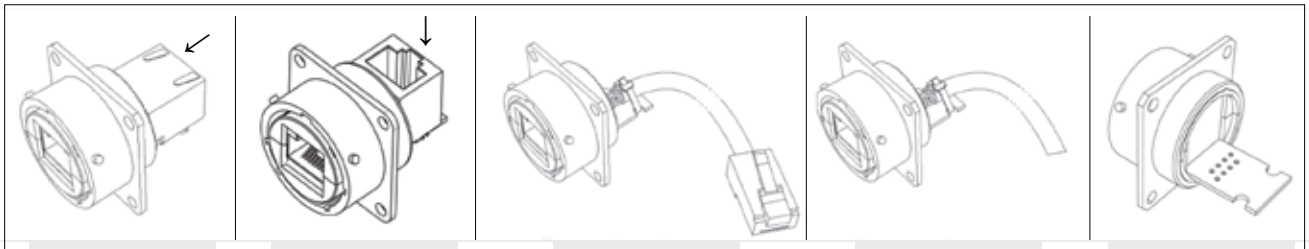

| Type **1** *Female RJ45* | Type **1RA** *Right angle female RJ45* | Type **2** *RJ45 cordset* | Type **OPEN** *No plug at the end* | Type **2 - 00** *Solder - 8 tinned holes* |
|---|---|---|---|---|

Amphenol

## Assembly instructions

### Insert codings

**Assembling of the plug.**

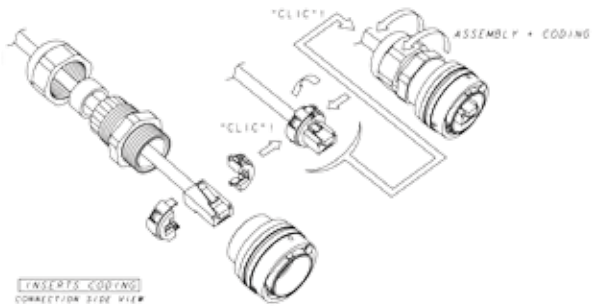


**4 codings possibilities**
**(defined by the customer during the assembling).**

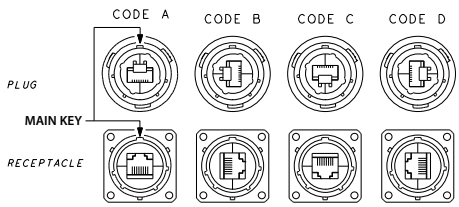


**Assembling of the receptacle.**

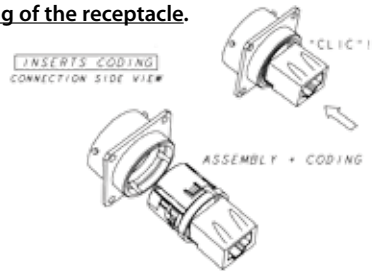


**IMPORTANT NOTE:** to remove the insert, use the

- **Insert removal tool for receptacle and plug**

P/N: **RJF ODE**

### Accessories

- **Metallic Caps**

| | RJFTVC | 2 | G |
|---|---|---|---|
| **Connector type**<br>**6**: plug<br>**2**: square flange receptacle<br>**7**: jam nut receptacle | | | |
| **Shell material & finish**<br>**N**: aluminium shell - nickel plating - *ROHS compliant*<br>**G**: aluminium shell - olive drab cadmium plating<br>**BZ**: marine bronze shell - *ROHS compliant*<br>**ZC**: aluminium shell - green zinc cobalt plating - *ROHS compliant*<br>**ZN**: aluminium shell - black zinc nickel plating - *ROHS compliant* | | | |

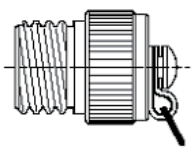

Plug Cap

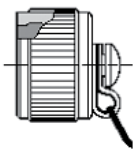

Receptacle Cap

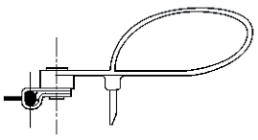

Plug Cap end

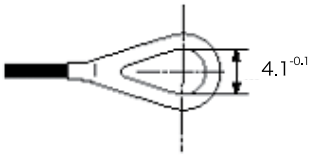


Square flange receptacle cap end

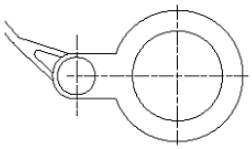

Jam Nut receptacle cap end

- **Panel gasket for square flange receptacle**
  **Thickness: 0,8 mm [.031]):**
  **P/n: JE19**

# RJFTV

## Self Closing Cap (SCC series)

This Self Closing cap automatically protects the RJF TV square flange receptacle (MIL-DTL-38999 type), protecting your system from dust and water projection. A spring automatically closes the upper part of the cap when the RJF TV plug is removed from the receptacle.

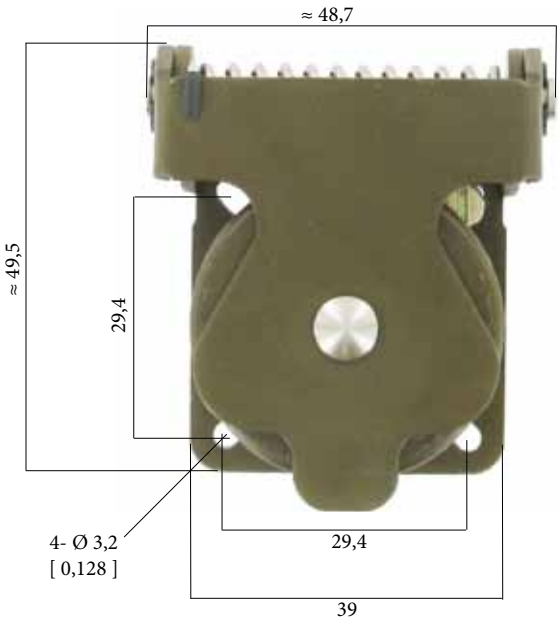

**IMPORTANT NOTE**
Metal Self Closing cap are sold separately (without receptacle).

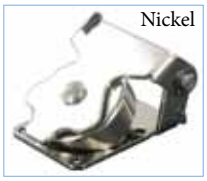

| | Plating | Part number |
|---|---|---|
| **Part number** | Black coating - *ROHS compliant* | **RJF TV SCC B** |
| | Nickel - *ROHS compliant* | **RJF TV SCC N** |
| | Olive drab cadmium | **RJFTV SCC G** |

**Remark:** compatible with RJFTV square flange receptacle type RJFTV**2**xxx only *(see page 26)*.

# RJF TV

## Receptacles & plugs with 360° EMI backshells

RJFTV series receptacles and plugs with EMI backshells provide a solution with 360° shielding: same protection than the one proposed by standard MIL-DTL-38999 series III connectors. With those solutions we recommend using our reinforced and double shielded Cat5E, Cat6, or Ca6A cable.
► *see pages 41-42-43*

### Square flange receptacle - *Straight backshell*

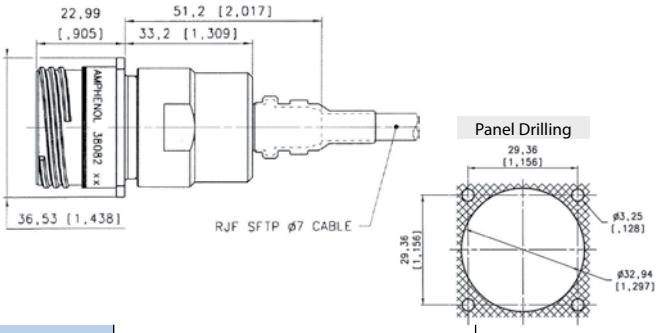


| Part number | Plating | P/N |
|---|---|---|
| | Nickel - *ROHS compliant* | **Kit38082NI** |
| | Olive drab cadmium | **Kit38082** |
| | Green zinc cobalt - *ROHS compliant* | **Kit38082ZC** |
| | Black zinc cobalt - *ROHS compliant* | **Kit38082ZN** |

### Square flange receptacle - *Right angle backshell*

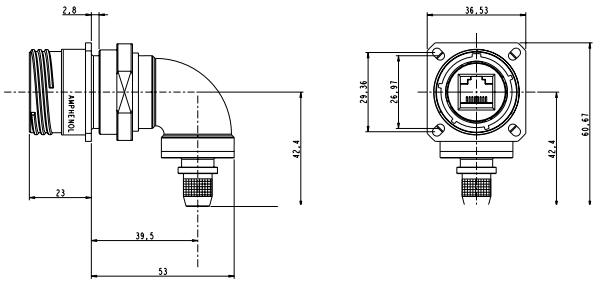


| Part number | Plating | P/N |
|---|---|---|
| | Nickel - *ROHS compliant* | **Kit40791NI** |
| | Olive drab cadmium | **Kit40791** |
| | Green zinc cobalt - *ROHS compliant* | **Kit40791ZC** |
| | Black zinc cobalt - *ROHS compliant* | **Kit40791ZN** |

**Kit38082 and Kit40791 include:**

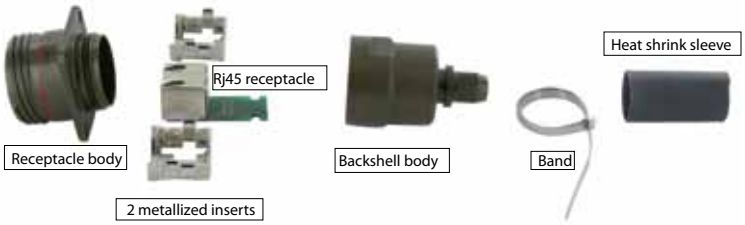


- **Panel gasket for square flange receptacle (thickness: 0,8 mm [.031])**

**P/n: JE19**

### Jam nut receptacle - *Straight backshell*

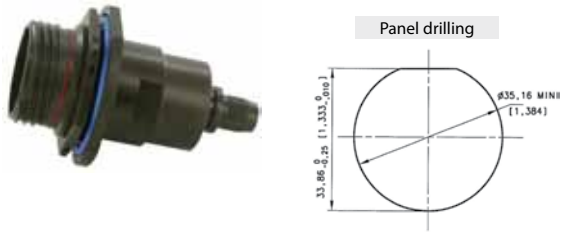


| Part number | Plating | P/N |
|---|---|---|
| | Nickel - *ROHS compliant* | **Kit38204NI** |
| | Olive drab cadmium | **Kit38204** |
| | Green zinc cobalt - *ROHS compliant* | **Kit38204ZC** |
| | Black zinc cobalt - *ROHS compliant* | **Kit38204ZN** |

### Jam nut receptacle - *Right angle backshell*

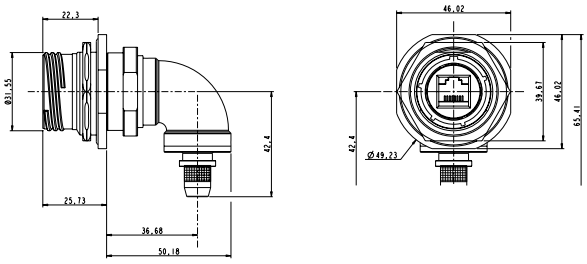


| Part number | Plating | P/N |
|---|---|---|
| | Nickel - *ROHS compliant* | **Kit40771NI** |
| | Olive drab cadmium | **Kit40771** |
| | Green zinc cobalt - *ROHS compliant* | **Kit40771ZC** |
| | Black zinc cobalt - *ROHS compliant* | **Kit40771ZN** |

**Kit38204 and Kit40771 include:**

**IMPORTANT NOTE**

With these receptacles, you will have to solder your own cable on the PCB.
So the wire positions have to be defined according to your network.

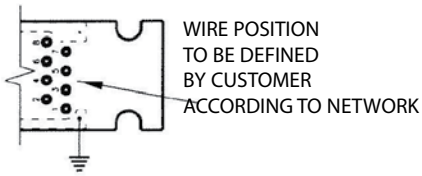


## Plug - *Straight backshell*

| Part number | Plating | P/N |
|---|---|---|
| | Nickel - *ROHS compliant* | **Kit38081NI** |
| | Olive drab cadmium | **Kit38081** |
| | Green zinc cobalt - *ROHS compliant* | **Kit38081ZC** |
| | Black zinc cobalt - *ROHS compliant* | **Kit38081ZN** |

## Plug - *Right angle backshell*

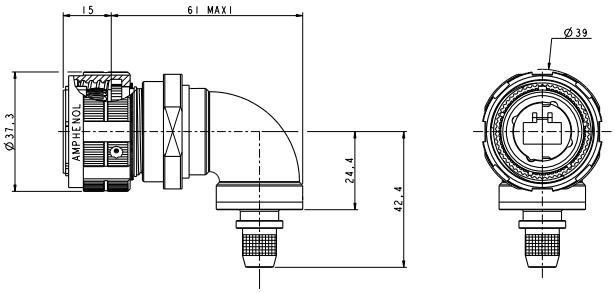


| Part number | Plating | P/N |
|---|---|---|
| | Nickel - *ROHS compliant* | **Kit40792NI** |
| | Olive drab cadmium | **Kit40792** |
| | Green zinc cobalt - *ROHS compliant* | **Kit40792ZC** |
| | Black zinc cobalt - *ROHS compliant* | **Kit40792ZN** |

**Kit38081 and Kit40792 include:**

**IMPORTANT NOTE**

With these plugs, the standard RJ45 plug is not provided.
Customer will have to crimp a standard RJ45 on the cable by himself.

**Remark:** we advise using our double shielded, reinforced Cat5E, Cat6, or Cat6A cables (see pages 41-42-43) with these RJFTV series EMI connectors.
If customer wants to use his own cable, please check with us regarding compatibility with our backshells: **contact@rjfield.com**.
We also provide assembled cordsets ***(see examples below)***.
For this type of solution please provide the configuration needed: length, description of second end…

***Example of assembled cordset:***

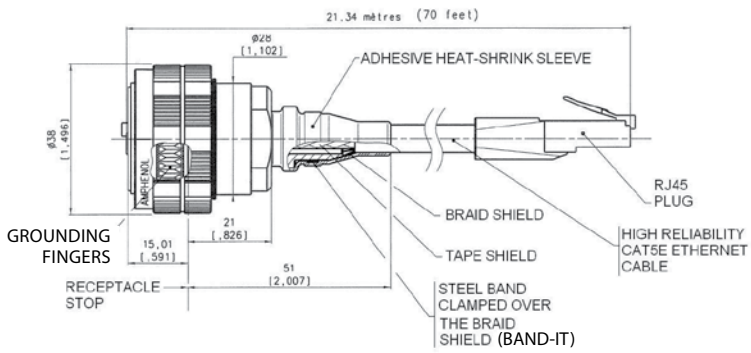


Amphenol

# RJF TV

## Through bulkhead receptacles

Our RJFTV through bulkhead receptacles can be connected on each side with rugged RJFTV plugs.
This system allows mechanical protection and a sealing (IP68 when mated) inside and outside the equipement, and keeps the flexibility offered by panel mount and plug connectors.
They can be connected with RJFTV series plugs.

### Square flange receptacle

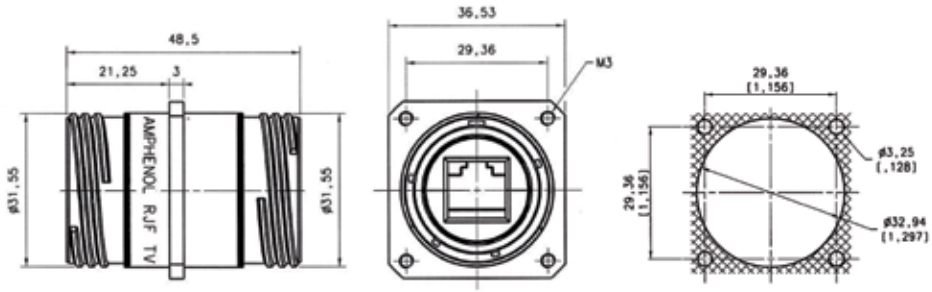


| | Plating | Metallized insert | For coding A |
|---|---|---|---|
| **Part number** | Nickel - *ROHS compliant* | No | **RJF TV B 2 N ISO BRUT *** |
| | Nickel - *ROHS compliant* | Yes | **RJF TV B 2 N ISO NI *** |
| | Olive drab cadmium | No | **RJF TV B 2 G ISO BRUT *** |
| | Olive drab cadmium | Yes | **RJF TV B 2 G ISO NI *** |

*** ISO BRUT = non conductive insert**
**ISO NI = conductive insert**

**IMPORTANT NOTE**
Possibility of other codings - Please consult us

### Jam nut receptacle

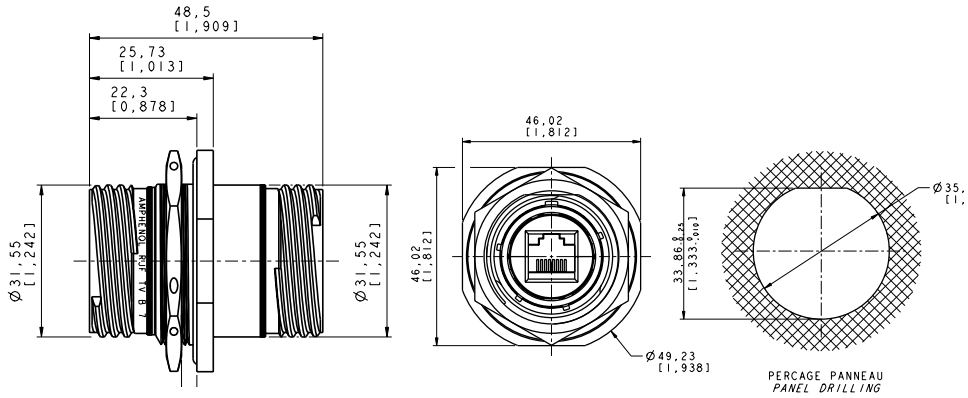


| | Plating | Metallized insert | Part number |
|---|---|---|---|
| **Part number** | Nickel - *ROHS compliant* | No | **RJF TV B 7 N ISO BRUT *** |
| | Nickel - *ROHS compliant* | Yes | **RJF TV B 7 N ISO NI *** |
| | Olive drab cadmium | No | **RJF TV B 7 G ISO BRUT *** |
| | Olive drab cadmium | Yes | **RJF TV B 7 G ISO NI *** |

*** ISO BRUT = non conductive insert**
**ISO NI = conductive insert**

# RJF TV

## Stand off receptacles

These receptacles can be sold directly to your PCB.
A compound insures a transversal sealing and good performance in high-vibration environments.
The shell of those receptacles are in the "Stand Off" style.
They can be connected with RJFTV series plugs.

### Square flange receptacle

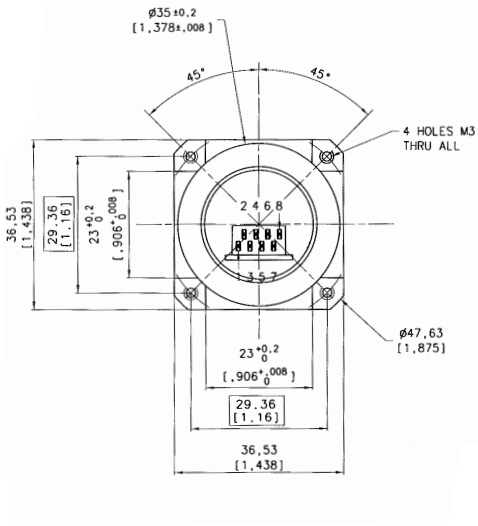


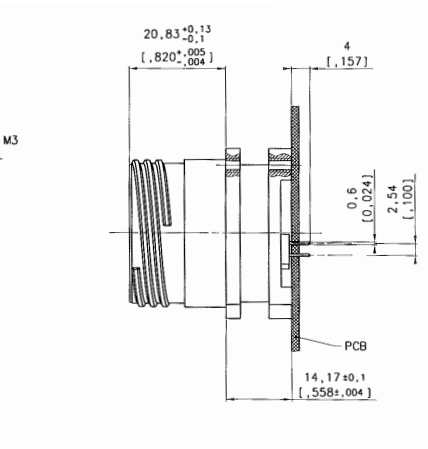


| Part number * | Plating available | Part number |
|---|---|---|
| | Nickel - *ROHS compliant* | **RJF TV 2S X 5N F459** |
| | Olive drab cadmium | **RJF TV 2S X 5G F459** |

** new p/n - before it was RJFTV25GF459 or RJFTV25NF459*

X to be replaced by the letter of the coding position you need (A, B, C, or D)

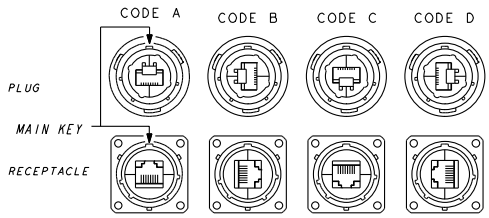


### PCB LAYOUT

*Solder face view*

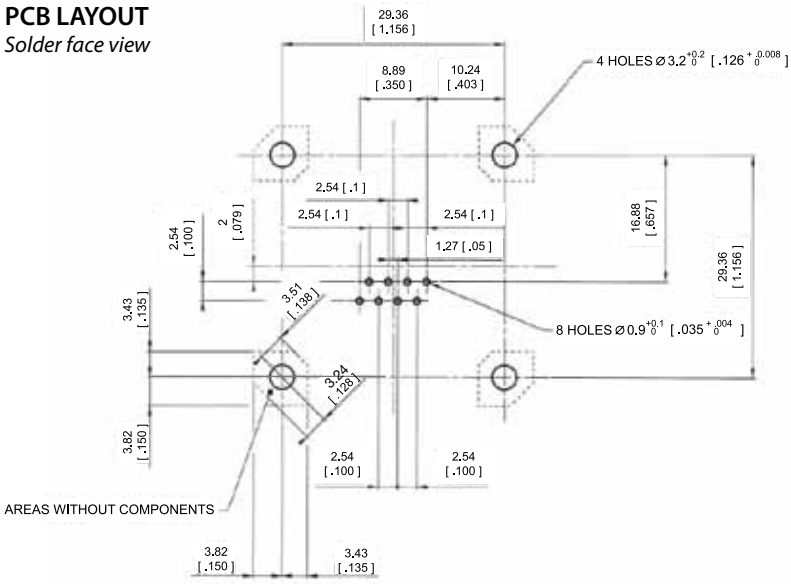


Panel drilling

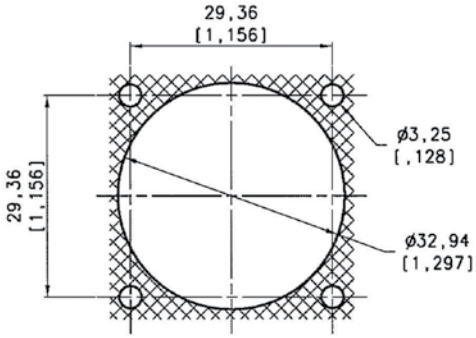


Amphenol

**NEW**

**Now available with same distance between flange and PCB than the 38999 stand off one.**
**So you can use a 38999 stand off and a RJ45 stand off in the same implementation.**

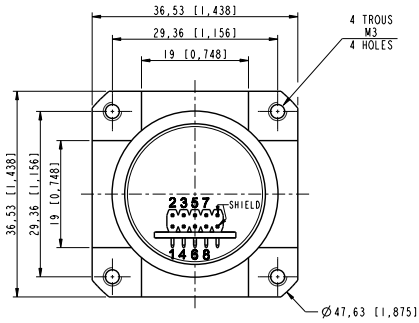


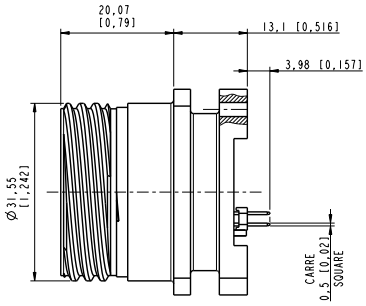


**Part number: 36542**
Plating: olive drab cadmium

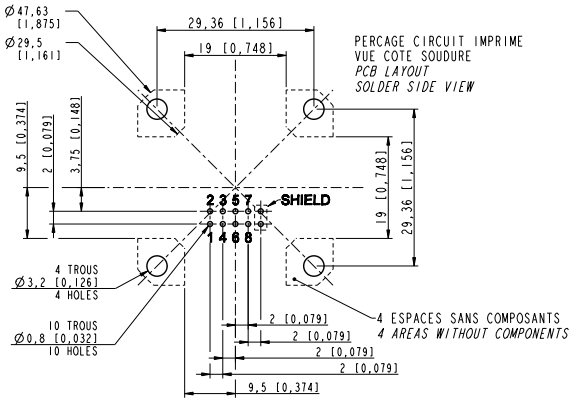


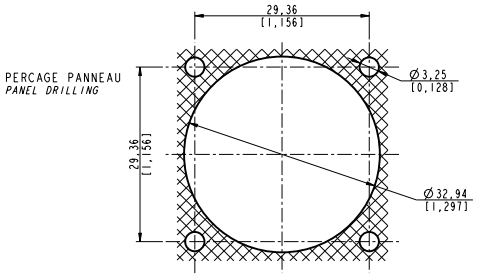


## Jam nut receptacle

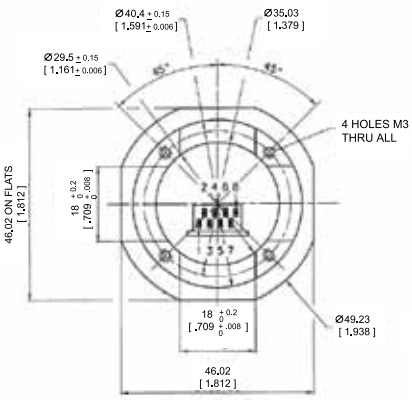


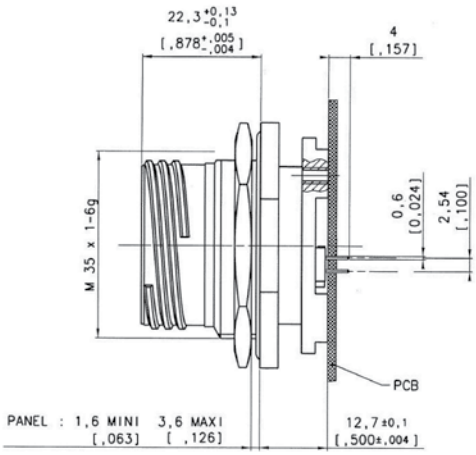


| Part number | Plating | Part number |
|---|---|---|
| | Nickel - *ROHS compliant* | **RJF TV 7S X 5N F459** |
| | Olive drab cadmium | **RJF TV 7S X 5G F459** |

X to be replaced by the letter of the coding position you need (A, B, C, or D)

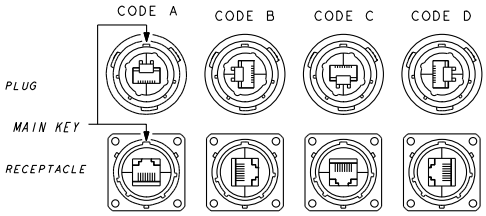

## PCB LAYOUT

*Solder side view*

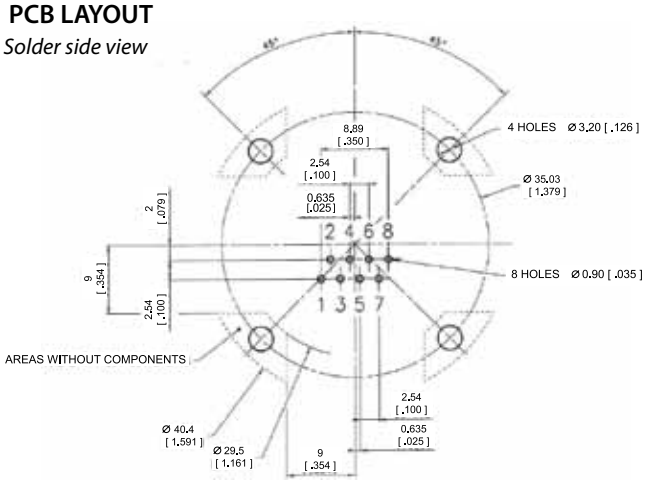


Panel Drilling

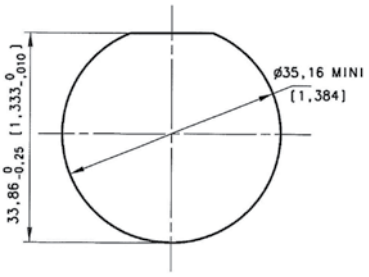


**NEW**

**Now available with same distance between flange and PCB than the 38999 stand off one. So you can use a 38999 stand off and a RJ45 stand off in the same implementation.**

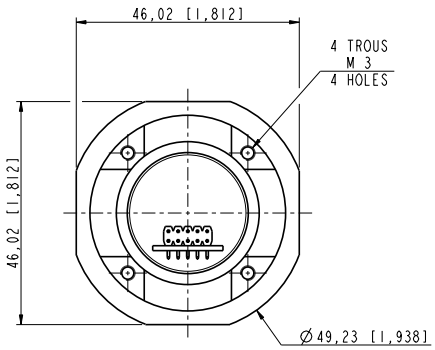


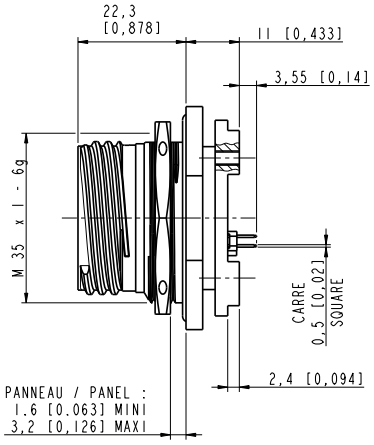


**Part number: 36540**

Jam nut receptacle, olive drab cadmium plating.

## PCB LAYOUT

*Solder side view*

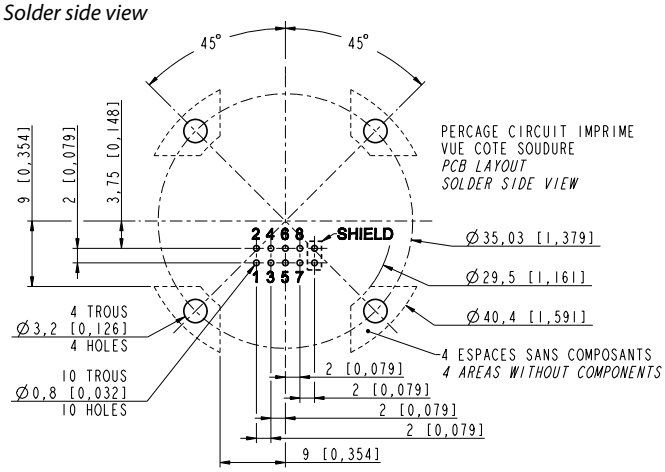


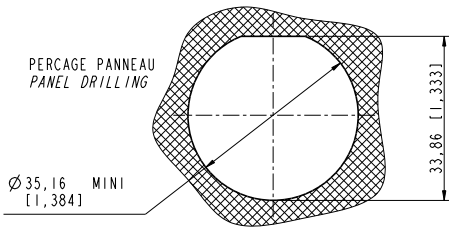


Amphenol

ROHS COMPLIANT
N, B & BZ

# RJF TV

## Environmentaly sealed receptacles, transversally sealed receptacles

In some applications, a transversal sealing for the receptacle is a « must ». This will prevent fluids and dust from going through the receptacle when plug or cap are not mated to the receptacle.
The sealed solution (version "S") has a compound at the rear of the receptacle as shown on the examples below. This feature is available both in RJF and RJF TV shells (please consult the relevant data sheet for product details and accessories).
In addition, the Sealed RJF TV has been successfully tested in very high vibration corresponding to airplane applications.

### Applications

- Outdoor equipment
- Airplanes equipment
- Tactical radios
- Shelters
- Rugged computers
- Data acquisition and transmission in harsh environments

### Data transmission

10 BaseT, 100 BaseTX and 1000 BaseT networks
Cat 5e per TIA/EIA 568B and ClassD per ISO/IEC 11801

### Main characteristics

- Same as the RJF and RJF TV series.
- A complete IP68 sealing of the receptacle (even with no plug or no protective cap mated) is added.
- Outside dimensions are the same as the standard RJF and RJF TV series.
- Vibrations: the compounded versions of the RJF TV have been tested in vibration following the NAS 1599 Aeronautic specification (Ambient temperature):
  5 - 3000 Hz, 20g, 2,5 mm [.1 inch] double amplitude, 3 axes, 12 hours
  Note: this specification exceeds MIL-C-26500 requirements.

### IMPORTANT NOTE

Due to the compound, the coding of the connector must be done in the factory : use the codes A, B, C or D in the part number: **see below**.

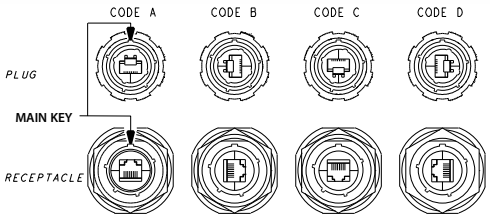

***Example :***
RJFTV 2S **A**2 G 15 100BTX

### Part number code

| | | | | | | |
|---|---|---|---|---|---|---|
| **Series**<br>**RJFTV:** MIL-DTL-38999 Series III | **RJF TV** | **7S** | **A** | **2** | **G** | **03 100BTX** |
| **Shell type**<br>**2S:** sealed square flange receptacle<br>**7S:** sealed jam nut receptacle | | | | | | |
| **Coding**<br>**A,B,C,D** | | | | | | |
| **Back terminations** *(for receptacles only)*<br>**1:** female RJ45<br>**1RA:** right angle female RJ45<br>**2:** RJ45 Cordset | | | | | | |
| **Shell material & finish**<br>**N:** aluminium shell - nickel plating - *ROHS compliant*<br>**G:** aluminium shell - olive drab cadmium plating<br>**BZ:** marine bronze shell - *ROHS compliant*<br>***Nota**: receptacle inserts are metallized* | | | | | | |
| **Cordset length** *(For Receptacles with "2" Back Termination only) - Other lengths are available on demand*<br>**03 100 BTX:** 0.3m [11.81 inches]<br>**05 100 BTX:** 0.5m [19.68 inches]<br>**10 100 BTX:** 1m [39.37 inches]<br>**15 100 BTX:** 1.5m [59.05 inches]<br>**OPEN**: open cable - with no plug at the end | | | | | | |

**Remark: cabling configuration:** 100 BTX = 568B (Ethernet specification)

*Examples:*
- *series III, sealed jam nut receptacle, A coding, with female RJ45 back termination, olive drab cadmium plating:* ***RJF TV 7SA 1 G***
- *series III, sealed square flange receptacle, A coding, with female RJ45 back termination, nickel plating:* ***RJF TV 2SA 1 N***
- *series III, sealed jam nut receptacle, A coding, 1.5m [59.05"] 100 BTX cordset, olive drab cadmium plating:* ***RJF TV 7SA 2 G15 100BTX***

# RJF TV

## Hermetic receptacles

ROHS COMPLIANT
N, B & BZ

In some applications, a transversal hermiticity for the receptacle is a « must ». This will prevent gas from going through the receptacle when plug or cap are not mated to the receptacle.
The hermetic solution (version "H") has a compound at the rear of the receptacle as shown on the examples below.
This feature is available both in RJF and RJF TV shells (please consult the relevant data sheet for product details and accessories).
Helium leakage is less than $1.10^{-6}$ $cm^3$ per second [0.1 micron cubic ft per hour] at one bar [15 psi] pressure differential.

### Applications

- Outdoor equipment
- Airplanes equipment
- Tactical radios
- Shelters
- Rugged computers
- Data acquisition and transmission in harsh environments

### Data Transmission

10 BaseT, 100 BaseTX and 1000 BaseT networks
Cat 5e per TIA/EIA 568B and ClassD per ISO/IEC 11801

### Main characteristics

- Same as the RJF and RJF TV series.
- A complete IP68 sealing of the receptacle (even with no plug or no protective cap mated) is added.
- Outside dimensions are the same as the standard RJF and RJF TV series.
- Vibrations: the compounded versions of the RJF TV have been tested in vibration following the NAS 1599 Aeronautic specification (Ambient temperature):
  5 - 3000 Hz, 20g, 2,5 mm [.1 inch] double amplitude, 3 axes, 12 hours
  Note: this specification exceeds MIL-C-26500 requirements.

### IMPORTANT NOTE

Due to the compound, the coding of the connector must be done in the factory: use the codes A, B, C or D in the part number: **see below**.

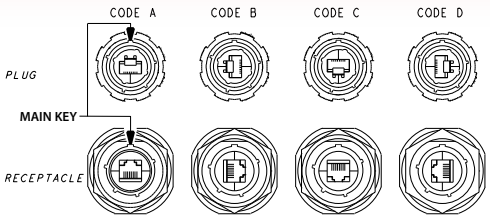

***Example :***
RJFTV 2H **A**2 N 15 100BTX

### Part number code

| | | | | | | |
|---|---|---|---|---|---|---|
| **Series**<br>**RJFTV:** MIL-DTL-38999 series III | **RJF TV** | **7H** | **A** | **2** | **G** | **03 100BTX** |
| **Shell type**<br>**2H:** transversally sealed and hermetic square flange receptacle<br>**7H:** transversally sealed and hermetic jam nut receptacle | | | | | | |
| **Coding**<br>**A,B,C,D** | | | | | | |
| **Back terminations** *(for receptacles only)*<br>**1:** female RJ45<br>**1RA:** right angle female RJ45<br>**2:** RJ45 Cordset | | | | | | |
| **Shell material & finish**<br>**N:** aluminium shell - nickel plating - *ROHS compliant*<br>**G:** aluminium shell - olive drab cadmium plating<br>**BZ:** marine bronze shell - *ROHS compliant*<br>***Nota**: receptacle inserts are metallized* | | | | | | |
| **Cordset length** *(for receptacles with "2" back termination only) - Other lengths are available on demand*<br>**03 100 BTX:** 0.3m [11.81 inches]<br>**05 100 BTX:** 0.5m [19.68 inches]<br>**10 100 BTX:** 1m [39.37 inches]<br>**15 100 BTX:** 1.5m [59.05 inches]<br>**OPEN**: open cable - with no plug at the end | | | | | | |

**Remark: cabling configuration:** 100 BTX = 568B (Ethernet specification)

*Examples:*
- *Series III, sealed jam nut receptacle, A coding, with female RJ45 Back termination, olive drab cadmium plating:* ***RJF TV 7HA 1 G***
- *Series III, sealed square flange receptacle, A coding, with female RJ45 back termination, nickel plating:* ***RJF TV 2HA 1 N***
- *Series III, sealed jam nut receptacle, A coding, 1.5m [59.05"] 100 BTX cordset, olive drab cadmium plating :* ***RJF TV 7HA 2 G15 100BTX***

Amphenol

# RJF TV

## For big insulation wire up to 1.6 mm

NEW

Special RJF TV plug dedicated to Ethernet cable with insulation wire from 1,1 to 1,6 mm.

**Remark:**
- compatible with any RJF TV receptacle
- for cables which are not compatible with standard RJ45 plug

### Applications
- Robotics
- Industrial process control
- CNC machines
- Special machines
- Oil & Gas
- Motion control
- Data acquisition and transmission in harsh environment
- Tele-maintenance

### Data transmission
10 BaseT, 100 BaseTX and 1000 BaseT networks
Cat 5e per TIA/EIA 568B and ClassD per ISO/IEC 11801

### Main characteristics
- Sealed against fluids and dusts (IP68)
- Shock, vibration and traction resistant
- No cabling operation in field and no tools required
- Mechanical coding / Polarization (4 positions)
- Improved EMI protection
- **Tri Start Thread coupling mechanism (MIL-DTL-38999 series III type) with anti-decoupling device - Shell size 19**
- **Robust metallic shells**
- RJ45 cordset retention in the plug: 100 N in the axis
- Mating cycles: 500 min
- Compatible with cable diameter from 6 mm [0.236 in] to 13 mm [0.512 in], for smaller diameters please consult us

### Environmental protection
- Sealing: IP68
- Salt spray: 48 h with nickel plating
  > 96 h with black coating
  > 500 h with olive drab cadmium
- Fire retardant/Low smoke: UL94 V0 and NF F 16 101 & 16 102
- Vibrations: 10 – 500 Hz, 10 g, 3 axes: no discontinuity > 10 nano s.
- Shocks: IK06 ▸weight of 250 g drop from 40 cm [15.75 in] onto connectors (mated pair)
- Humidity: 21 days, 43°C, 98% humidity
- Thermal shock: 5 cycles at - 40°C / +100°C
- Temperature range: - 40°C / +85°C

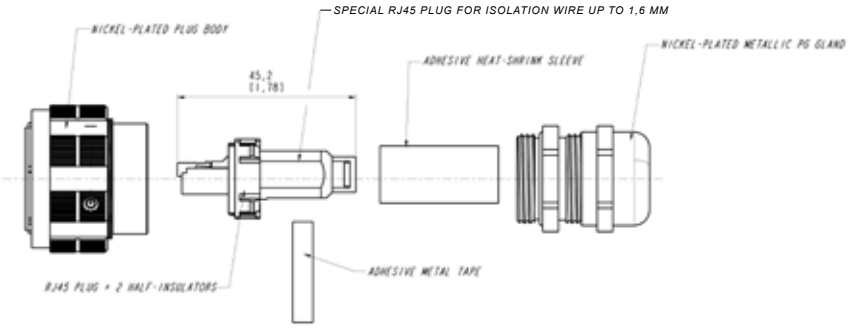


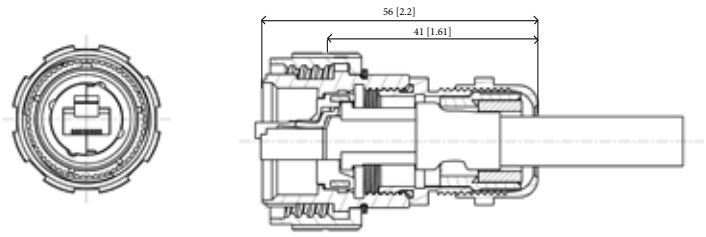


| Part number | Plating | P/N |
|---|---|---|
| | Nickel - *ROHS compliant* | **35660** |
| | Olive drab cadmium | **35660G** |

# RJ45/M12 adaptor

NEW

RJ45/M12 adaptors allow to give an access point with RJ45 on M12 D coded based networks.
Especially used in Railway applications.

**Part number : 35655**
Nickel plating.

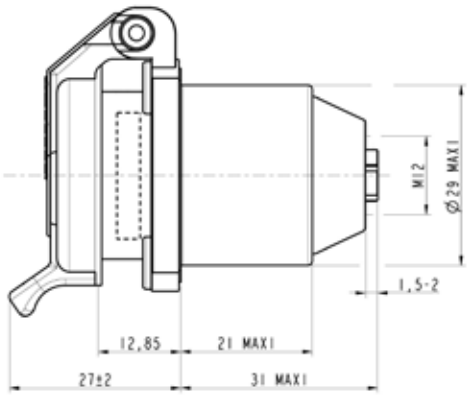


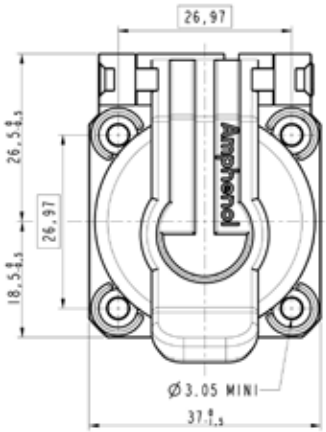


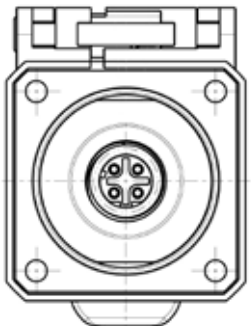

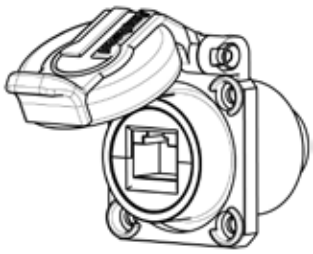

| M12-D | RJ45 contact position |
|---|---|
| 1 | 1 |
| 2 | 3 |
| 3 | 2 |
| 4 | 6 |

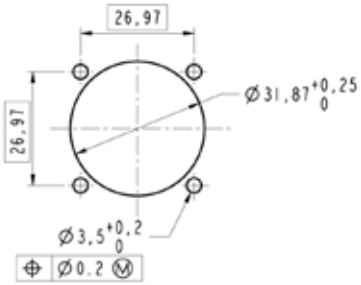


Amphenol

# Special RJ45 adaptor

NEW

## For Military & Commercial Aeronautics

At the rear of the adaptor, the connection is for connectors type EN3646.

### Adaptor RJ45 only

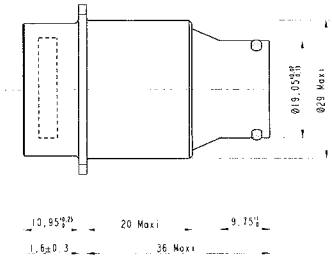


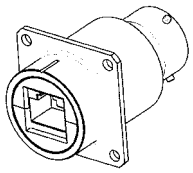

| Part number | | Coding |
|---|---|---|
| | 35629 | N |
| | 35632 | Y |

### Adaptor RJ45 + Self Closing Cap

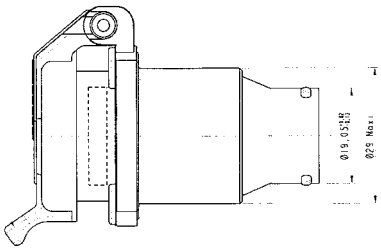


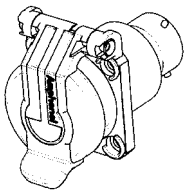

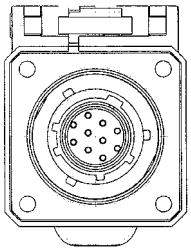

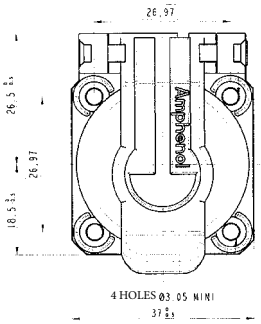


| Part number | | Coding |
|---|---|---|
| | 35630 | N |
| | 35631 | Y |

### For all options:

**Panel Drilling**

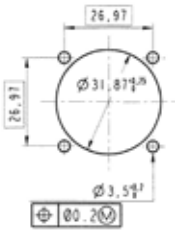


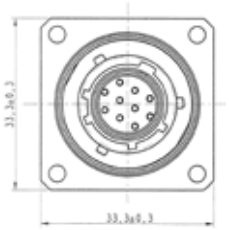

**12-10 Male contact EN3155**

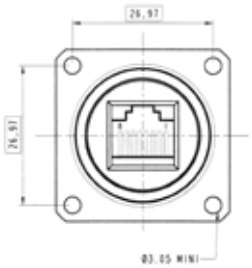


**Coding N**

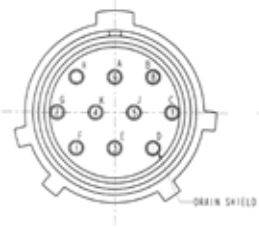


**Coding Y**

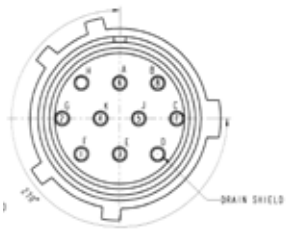

# CAT 5E CABLE

## High reliability Cat 5e Ethernet cable & cordsets

### General construction

A 4 pair, 24 AWG, 100 Ohm SFTP round patch cable, designed to the ISO / IEC 11801 Category 5e requirements (cat 5e on 76m). The cable contains 4 twisted pairs, cabled, double shielded with kevlar reinforcement strands, jacketed in black UV resistant Polyurethane HFFR. Designed for fixed or portable applications in harsh environments.

### HFFR: Halogen Free Flame Retardant

Jacket compound specification:

- Halogen free flame retardant polyether-based polyurethane
- Excellent hydrolysis resistance
- High microbial resistance
- Glossy finish
- UV resistant
- High flexibility

### Applications

- Robotics
- Motion control
- Railways
- CNC machines
- Battelfield communication
- Industrial process control

Datas for the cable alone only (without RJ45 plug)

### Physical characteristics

| | |
|---|---|
| **CONDUCTORS** | 24 AWG (0,25 mm²) tinned copper, 7x0.20 mm |
| **INSULATION** | Color coded 568-B, linear low Density Polyethylene, Nom. Dia. 0,039" (1mm) |
| **ASSEMBLY** | Pairs cabled with Kevlar strength members and separation tape wrapped |
| **SHIELDS** | Inner: aluminium mylar 100% coverage<br>Outer: tinned copper braid 80% coverage |
| **JACKET** | Black, special PUR compound |
| **WEIGHT** | 40 lbs / mft (59 kg/km) |
| **OUTSIDE DIAM.** | 0.28" (7.1 mm) nom. |
| **MIN BEND RADIUS** *(During installation)* | 67.5mm (9x O. D.) |
| **MIN BEND RADIUS** *(During operation)* | 37.5mm (5 x O.D.) |
| **MIN FLEXES TO FAILURE** | Passes IEC 61156-6 requirements |
| **TEMPERATURE** | Plus 85°C, minus 40°C |

### Cordsets with a RJ45 plug overmolded on each end

| Length (m/ft) | Part number |
|---|---|
| 0,76 m / 2,5 ft | RJF SFTP 5E 0076 |
| 1,00 m / 3.28 ft | RJF SFTP 5E 0100 |
| 1,52 m / 5 ft | RJF SFTP 5E 0152 |
| 3,05 m / 10 ft | RJF SFTP 5E 0305 |
| 4,57 m / 15 ft | RJF SFTP 5E 0457 |
| 5,00 m / 16.4 ft | RJF SFTP 5E 0500 |
| 6,00 m / 19.68 ft | RJF SFTP 5E 0600 |
| 6,24 m / 20.46 ft | RJF SFTP 5E 0624 |
| 7,62 m / 25 ft | RJF SFTP 5E 0762 |
| 8,00 m / 26.24 ft | RJF SFTP 5E 0800 |
| 10,00 m / 32.78 ft | RJF SFTP 5E 1000 |
| 14,00 m / 45.92 ft | RJF SFTP 5E 1400 |
| 15,25 m / 50 ft | RJF SFTP 5E 1525 |
| 22,87 m / 75 ft | RJF SFTP 5E 2287 |
| 30,5 m / 100 ft | RJF SFTP 5E 3050 |
| 45,75 m / 150 ft | RJF SFTP 5E 4575 |
| 50,00 m / 164 ft | RJF SFTP 5E 5000 |
| 61,00 m / 200.08 ft | RJF SFTP 5E 6100 |

### Electrical characteristics *(at 20°C - 68°F)*

| | |
|---|---|
| **DC Resistance** | 96 Ohms/Km |
| **Impedance** *(1-100 MHz)* | 100 +/- 15 Ohms |

| Frequency | Attenuation *(dB/100m)* | N.E.X.T. *(Near-End Crosstalk Loss)* |
|---|---|---|
| 772 KHz | 2.70 dB | 64 dB min. |
| 1 MHz | 3.15 dB | 62 dB min. |
| 4 MHz | 6.45 dB | 53 dB min. |
| 10 MHz | 9.90 dB | 47 dB min. |
| 16 MHz | 12.3 dB | 44 dB min. |
| 20 MHz | 13.8 dB | 42 dB min. |
| 31.25 MHz | 17.7 dB | 40 dB min. |
| 62.5 MHz | 25.6 dB | 35 dB min. |
| 100 MHz | 33 dB | 32 dB min. |

| | |
|---|---|
| **Capacitance** (1 kHz) | 46nF/km nom. |
| **LCL** | 43 dB min. @ 64 KHz |
| **Capacitance unbalance** | 3.4 pF/m max. @ 1KHz (wire to ground) |
| **Insulation resistance** | 150 M Ohm min. |
| **Voltage rating** | 230 VMS |
| **Dielectric strength** | VAC/1 min - 700 V/Min |
| **Propagation delay (100 MHz)** | 5.2 ns/m max. |
| **Delay skew** | 20 ns/100m max. @ 1-100 MHz |
| **Resistance unbalance** | 3% max. |
| **Structural return loss** (1-20 MHz) | 23db/100m min. |
| **Spark test (tested during production)** | 3 KV |
| **Velocity of propagation** | 67% nom. |

### Reel of cable *(without RJ45 plug on ends)*

| Length (m / ft) | Part number |
|---|---|
| 100 m / ~328 ft | 190-038045-00 |
| 300 m / ~984 ft | 190-038045-01 |

# CAT 6 CABLE

## High reliability Cat 6 Ethernet cable & cordsets

NEW

ROHS COMPLIANT

### General construction

A 4 pairs, 26 AWG, 100 Ohm SFTP round patch cable, designed to the ISO / IEC 11801 Category 6 requirements. The cable contains 4 twisted pairs individually shielded, cabled, double shielded with kevlar reinforcement strands, jacketed in black UV resistant Polyurethane HFFR. Designed for fixed or portable applications in harsh environments.

### HFFR: Halogen Free Flame Retardant

Jacket compound specification:

- Halogen free flame retardant polyether-based polyurethane
- Excellent hydrolysis resistance
- High microbial resistance
- Glossy finish
- UV resistant
- High flexibility

### Applications

- Robotics
- Motion control
- Railways
- CNC machines
- Battlefield communication
- Industrial process control

### Electrical characteristics *(at 20°C - 68°F)*

| | |
|---|---|
| **DC Resistance** | 290 Ohm/Km |
| **Impedance** *(100 MHz)* | 100 +/- 5 Ohm |

| Frequency | Attenuation *(dB/100m)* | N.E.X.T. *(Near-End Crosstalk Loss)* |
|---|---|---|
| 1 MHz | 3.1 dB | 75.3 dB min. |
| 4 MHz | 5.8 dB | 66.3 dB min. |
| 8 MHz | 8.0 dB | 61.8 dB min. |
| 10 MHz | 9.0 dB | 60.3 dB min. |
| 16 MHz | 11.4 dB | 57.2 dB min. |
| 20 MHz | 12.8 dB | 55.8 dB min. |
| 25 MHz | 14.1 dB | 54.3 dB min. |
| 31.25 MHz | 16.1 dB | 52.8 dB min. |
| 62.5 MHz | 23.2 dB | 48.4 dB min. |
| 100 MHz | 29.9 dB | 45.3 dB min. |
| 200 MHz | 43.7 dB | 40.8 dB min. |
| 250 MHz | 49.7 dB | 39.3 dB min. |

| | |
|---|---|
| **Capacitance** (1 kHz) | 50nF/km nom. |
| **Capacitance unbalance** | 1600 pF/km max. |
| **Insulation resistance** | 5 GOhm/km |
| **Voltage rating (peak)** | 230 V |
| **Dielectric strength** | VAC/1 min - 700 V/Min |
| **Propagation delay** | 4.6 ns/m |
| **Skew** | 45 ns/100m |
| **Resistance unbalance** | 2% |
| **Return loss** (250 MHz) | 15.6dB |
| **Velocity of propagation** | 72% nom. |

### Reel of cable *(without RJ45 plug on ends)*

| Length (m / ft) | Part number |
|---|---|
| 100 m / ~328 ft | 191-031179-00 |
| 300 m / ~984 ft | 191-031179-01 |

### Physical characteristics

Datas for the cable alone only (without RJ45 plug)

| | |
|---|---|
| **Conductors** | 26 AWG (0,14 mm$^2$) tinned copper |
| **Insulation** | Polyethylene<br>Nom. Dia. 0,039" (1mm) |
| **Assembly** | Pairs cabled with Kevlar strength members and separation tape wrapped |
| **Shields** | Inner: aluminium mylar 100% coverage<br>Outer: tinned copper braid 80% coverage |
| **Jacket** | Black, special PUR compound |
| **Weight** | 36.9 lbs / mft (55 kg/km) |
| **Outside diam.** | 0.272" (6.9 mm) nom. |
| **Min bend radius** *(During installation)* | 72mm (10x O. D.) |
| **MIn bend radius** *(During operation)* | 36mm (5 x O.D.) |
| **Min flexes to failure** | Passes IEC 61156-6 requirements |
| **Temperature** | -40°C *(-40°F)* / + 85°C *(185°F)* |

### Cordsets with a RJ45 plug overmolded on each end

| Length (m/ft) | Part number |
|---|---|
| 0,75 m / *2,46 ft* | RJF SFTP 6 0075 |
| 1,00 m / *3,28 ft* | RJF SFTP 6 0100 |
| 1,50 m / *4,92 ft* | RJF SFTP 6 0150 |
| 2,00 m / *6,56 ft* | RJF SFTP 6 0200 |
| 2,50 m / *8,20 ft* | RJF SFTP 6 0250 |
| 3,00 m / *9,84 ft* | RJF SFTP 6 0300 |
| 3,50 m / *11,48 ft* | RJF SFTP 6 0350 |
| 4,00 m / *13,12 ft* | RJF SFTP 6 0400 |
| 4,50 m / *14,76 ft* | RJF SFTP 6 0450 |
| 5,00 m / *16,40 ft* | RJF SFTP 6 0500 |
| 6,00 m / *19,68 ft* | RJF SFTP 6 0600 |
| 7,00 m / *22,96ft* | RJF SFTP 6 0700 |
| 8,00 m / *26,24 ft* | RJF SFTP 6 0800 |
| 9,00 m / *29,52 ft* | RJF SFTP 6 0900 |
| 10,00 m / *32,80 ft* | RJF SFTP 6 1000 |
| 15,00 m / *49,20 ft* | RJF SFTP 6 1500 |
| 20,00 m / *65,60 ft* | RJF SFTP 6 2000 |
| 25,00 m / *82,00 ft* | RJF SFTP 6 2500 |
| 30,00 m / *98,40 ft* | RJF SFTP 6 3000 |
| 35,00 m / *114,80 ft* | RJF SFTP 6 3500 |
| 40,00 m / *131,20 ft* | RJF SFTP 6 4000 |
| 45,00 m / *147,60 ft* | RJF SFTP 6 4500 |
| 50,00 m / *164,00 ft* | RJF SFTP 6 5000 |
| 60,00 m / *196,80 ft* | RJF SFTP 6 6000 |

# CAT 6A CABLE

## High reliability Cat 6A Ethernet cable & cordsets

NEW

ROHS COMPLIANT

### General construction

A 4 pairs, 26 AWG, 100 Ohm SFTP round patch cable, designed to the ISO / IEC 11801 Category 6A requirements. The cable contains 4 twisted pairs individually shielded, cabled, double shielded with kevlar reinforcement strands, jacketed in black UV resistant Polyurethane HFFR. Designed for fixed or portable applications in harsh environments.

### HFFR: Halogen Free Flame Retardant

Jacket compound specification:

- Halogen free flame retardant polyether-based polyurethane
- Excellent hydrolysis resistance
- High microbial resistance
- Glossy finish
- UV resistant
- High flexibility

### Applications

- Robotics
- Motion control
- Railways
- CNC machines
- Battlefield communication
- Industrial process control

Datas for the cable alone only (without RJ45 plug)

### Electrical characteristics *(at 20°C - 68°F)*

| | |
|---|---|
| **DC Resistance** | 290 Ohm/Km |
| **Impedance** *(100 MHz)* | 100 +/- 5 Ohm |

| Frequency | Attenuation *(dB/100m)* | N.E.X.T. *(Near-End Crosstalk Loss)* |
|---|---|---|
| 1 MHz | 3.1 dB | 75.3 dB min. |
| 4 MHz | 5.7 dB | 66.3 dB min. |
| 8 MHz | 8.0 dB | 61.8 dB min. |
| 10 MHz | 8.9 dB | 60.3 dB min. |
| 16 MHz | 11.2 dB | 57.2 dB min. |
| 20 MHz | 12.6 dB | 55.8 dB min. |
| 25 MHz | 14.1 dB | 54.3 dB min. |
| 31.25 MHz | 15.8 dB | 52.8 dB min. |
| 62.5 MHz | 22.5 dB | 48.4 dB min. |
| 100 MHz | 28.7 dB | 45.3 dB min. |
| 200 MHz | 41.4 dB | 40.8 dB min. |
| 250 MHz | 46.6 dB | 39.3 dB min. |
| 300 MHz | 51.4 dB | 38.1 dB min. |
| 400 MHz | 60.1 dB | 36.3 dB min. |
| 500 MHz | 67.9 dB | 34.8 dB min. |

| | |
|---|---|
| **Capacitance** (1 kHz) | 50nF/km nom. |
| **Capacitance unbalance** | 1600 pF/km max. |
| **Insulation resistance** | 5 GOhm/km |
| **Voltage rating (peak)** | 230 V |
| **Dielectric strength** | VAC/1 min - 700 V/Min |
| **Propagation delay** | 4.6 ns/m |
| **Skew** | 45 ns/100m |
| **Resistance unbalance** | 2% |
| **Return loss** (500 MHz) | 15.6dB |
| **Velocity of propagation** | 72% nom. |

### Reel of cable *(without RJ45 plug on ends)*

| Length (m / ft) | Part number |
|---|---|
| 100 m / ~328 ft | 191-031190-00 |
| 300 m / ~984 ft | 191-031190-01 |

### Physical characteristics

| | |
|---|---|
| **Conductors** | 26 AWG (0,14 mm²) tinned copper |
| **Insulation** | Density Polyethylene, Nom. Dia. 0,039" (1mm) |
| **Assembly** | Pairs cabled with Kevlar strength members and separation tape wrapped |
| **Shields** | Inner: aluminium mylar 100% coverage<br>Outer: tinned copper braid 80% coverage |
| **Jacket** | Black, special PUR compound |
| **Weight** | 36.9 lbs / mft (55 kg/km) |
| **Outside diam.** | 0.272" (6.9 mm) nom. |
| **Min bend radius** *(During installation)* | 72mm (10x O. D.) |
| **MIn bend radius** *(During operation)* | 36mm (5 x O.D.) |
| **Min flexes to failure** | Passes IEC 61156-6 requirements |
| **Temperature** | -40°C *(-40°F)* / + 85°C *(185°F)* |

### Cordsets with a RJ45 plug overmolded on each end

| Length (m/ft) | Part number |
|---|---|
| 0,75 m / *2,46 ft* | RJF SFTP 6A 0075 |
| 1,00 m / *3,28 ft* | RJF SFTP 6A 0100 |
| 1,50 m / *4,92 ft* | RJF SFTP 6A 0150 |
| 2,00 m / *6,56 ft* | RJF SFTP 6A 0200 |
| 2,50 m / *8,20 ft* | RJF SFTP 6A 0250 |
| 3,00 m / *9,84 ft* | RJF SFTP 6A 0300 |
| 3,50 m / *11,48 ft* | RJF SFTP 6A 0350 |
| 4,00 m / *13,12 ft* | RJF SFTP 6A 0400 |
| 4,50 m / *14,76 ft* | RJF SFTP 6A 0450 |
| 5,00 m / *16,40 ft* | RJF SFTP 6A 0500 |
| 6,00 m / *19,68 ft* | RJF SFTP 6A 0600 |
| 7,00 m / *22,96ft* | RJF SFTP 6A 0700 |
| 8,00 m / *26,24 ft* | RJF SFTP 6A 0800 |
| 9,00 m / *29,52 ft* | RJF SFTP 6A 0900 |
| 10,00 m / *32,80 ft* | RJF SFTP 6A 1000 |
| 15,00 m / *49,20 ft* | RJF SFTP 6A 1500 |
| 20,00 m / *65,60 ft* | RJF SFTP 6A 2000 |
| 25,00 m / *82,00 ft* | RJF SFTP 6A 2500 |
| 30,00 m / *98,40 ft* | RJF SFTP 6A 3000 |
| 35,00 m / *114,80 ft* | RJF SFTP 6A 3500 |
| 40,00 m / *131,20 ft* | RJF SFTP 6A 4000 |
| 45,00 m / *147,60 ft* | RJF SFTP 6A 4500 |
| 50,00 m / *164,00 ft* | RJF SFTP 6A 5000 |
| 60,00 m / *196,80 ft* | RJF SFTP 6A 6000 |

## NOTES

# Rugged Ethernet Solutions

## Cable assemblies

Table of contents


NEW RJ45/M12: Ethernet Railway cable solution ..... 46

NEW JUMPER Railway intercoach ..... 47

# RJ45/M12: Ethernet railway cable solution

Part number: **Kit 36516** - *Length 7 m [22.96 ft]*

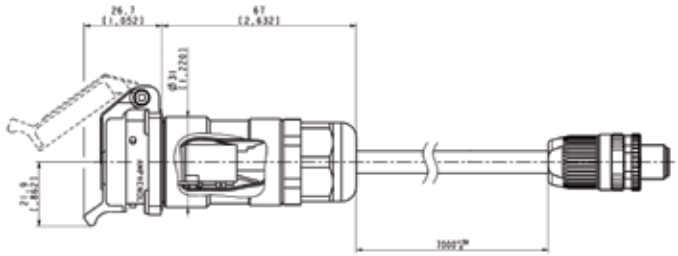

Part number: **Kit 36520** - *Length 1 m [3.28 ft]*

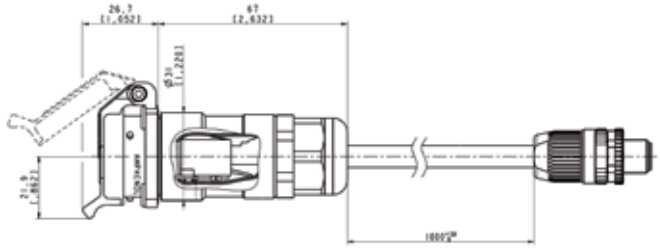

Part number: **Kit 36530** - *Length 4 m [13.12 ft]*

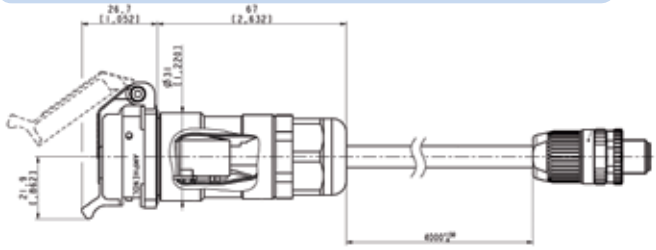

**M12 D Coding**

**For all options:**

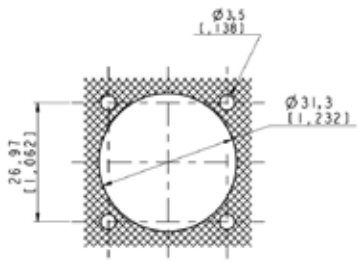


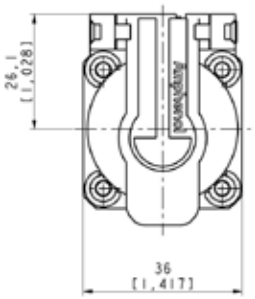


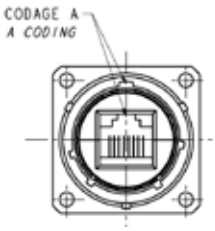

# JUMPER railway intercoach

## Derived from RJFTV Series

NEW

ROHS COMPLIANT N

Note: for technical characteristics, please refer to RJFTV page 26.

**Kit 40426 includes:**

- 2 RJF TV plugs with EMI backshell assembled (coding A)
- 1 RJF SFTP cable cat 5E high reliability
- 1 conduit PCST-17B
- 2 PMAFIX straight, PG metal thread

| Part number | $L^{+100}_{0}$ | P/N |
|---|---|---|
| | 2465 | **Kit 40426 Rep 101** |
| | 3010 | **Kit 40426 Rep 102** |

***For any other lenght, please consult us: contact@rjfield.com***

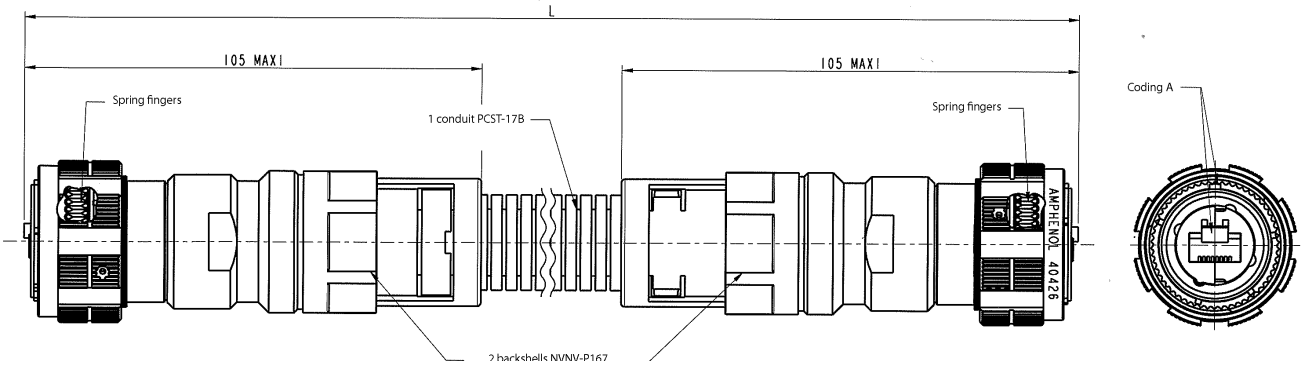


Amphenol

## NOTES

# Rugged Ethernet Solutions

## Rugged electronics

Amphenol

## Table of contents


**Military Ethernet Media Converter for harsh environment, fully MIL-STD compliant**

NEW

RES-GMC with Expanded Beam technology: Military Ethernet Media Converter - 2 Gigabit ports ..... 50
RES-GMC with Butt Joint Fiber connector: Military Ethernet Media Converter - 2 or 4 Gigabit ports ..... 52
RES-GMC-1M-FORC: Military Ethernet Media Converter with Remote Control ..... 54

NEW

**Military Ethernet Switch for harsh environment, fully MIL-STD compliant**

RES-SCE-AC-8US: Unmanaged Miniature Portable Ethernet Switch - 8 Fast ports ..... 56
RES-SCE-8MG: Managed Miniature Portable Ethernet Switch - 8 Gigabit ports ..... 58
RESMLAC-8US-CAPS: Unmanaged Military Ethernet Switch, MIL-DTL-38999 connectors - 8 Fast ports ..... 60
RJSMLAC-8UG-CAPS: Unmanaged Military Ethernet Switch, RJFTV connectors - 8 Gigabit ports ..... 62
RJSMLAC-8MG-CAPS: Managed Military Ethernet Switch, RJFTV connectors - 8 Gigabit ports ..... 64
RESMLAC-8MG-CAPS: Managed Military Ethernet Switch, MIL-DTL-38999 connectors - 8 Gigabit ports ..... 66
RESMLAC-8MG-CAPS F35: Managed Military Ethernet Switch, MIL-DTL-38999 connectors - 8 Gigabit ports ..... 68
RESMLAC-28MG: Managed Military Ethernet Switch - 24 Gigabit + 4 combo 10G ports ..... 70

**Military Ethernet Switch for harsh environment with industrial EMI compliancy**

RJSML-8US1 and RJSML-8UG1: Unmanaged Military Ethernet Switch, Fast or Gigabit ..... 73
RJSML-MG7F3G : Managed Military Ethernet Switch - 7 Fast ports + 3 Gigabit ports ..... 77

**Industrial Ethernet Switch for harsh environment**

RJSPC: Unmanaged or Ring Industrial Ethernet Switch - 5 Fast ports ..... 81

# RES-GMC with Expanded Beam Technology Military Ethernet Media Converter

NEW

**For harsh environment - Fully MIL-STD compliant**

Amphenol's RES-GMC is a MIL-STD rugged, unmanaged-military-grade security gateway, offering up to 2 Gigabit security gateways per device for unidirectional and data diodes solution for total isolation between two network with different security classification. The unit supports PoE on 2 ports (IEEE802.3af and IEEE802.3at).

Developed for military and harsh environment applications, the RES-GMC features mechanical packaging enhancements designed for MIL-STD-810F airborne and ground environmental compliance and high reliability.
The unit has been especially hardened to improve ingress, impact, and shock/vibration protection, as well as eliminate all moving parts through passive cooling, and interface through sealed MIL-D-38999 circular connectors.

Leveraging best-in-class switching technology, the RES-GMC series serves as a robust solution to extend your Tactical Gigabit Ethernet network connectivity of up to 120Km over fiber. Compact in size, the RES-GMC is particularly useful for remote and space-constrained locations either on ground vehicle environments or airborne.

### Military applications

- Data acquisition & transmission
- Battlefield communication C4ISR
- Rugged Networks
- Combat vehicles
- Avionic & shipboard systems

### Key features

- **Ethernet ports**
  - 10/100/1000 Base TX to 100/1000 Base FX-(MM/SM) Media converter (WDM - Optional)
  - Up to 2 x 10/100/1000Base-TX and up to 2 x 100/1000 Base FX
- **Networking**
  - Full wire-speed forwarding rate
  - Option for Up to 2 ports PoE - IEEE802.3af, IEEE802.3at
  - Store-and-forward or Pass through mechanism
  - Auto MDI-II, MDI-X, FDX, HDX, Flow control
  - Auto-negotiation and fixed settings via DIP switch
  - Jumbo frame support
  - Link loss forwarding mechanism
- **Connectors**
  - MIL-D-38999 (Power & Ethernet signals)
  - Power connector type: D38999/24WA98PA
  - LAN connector type: RJFTV
  - Fiber connector type: CTOS 77 PC or TAC BEAM EB 4H 8000
  - Protective cap over each connector
- **Chassis**
  - Low profile rugged aluminium extrusion
  - Conductively cooled w/custom internal heat-sinks
  - Ingress protection against sand, dust and moisture
  - Anodize coating, MIL-A-8625, Type II, Class 2
- **Standards**
  - MIL-STD-1275, MIL-STD-704A, MIL-STD-461E,
  - MIL-STD-810F GM, IP67/68

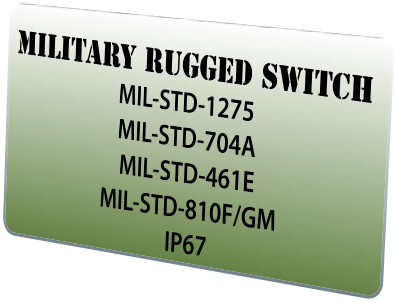

## Product specifications

### Performance
- 26.8 Mpps wire speed forwarding rate
- 2 Gbps maximum forwarding bandwidth
- 4K MAC address
- 2 LED indication (Speed, Link/Activity) per port
- Wire-speed reception and transmission

### Standards compliance
- IEEE 802.3, 10 Mbps 10BASE-T (Ethernet)
- IEEE 802.3u, 100 BASE-TX 100 Mbps (Fast Ethernet)
- IEEE 802.3ab, 1000Base-TX
- IEEE 802.3z, 1000Base-FX Gigabit
- IEEE 802.3x Flow control

### Power
- MIL-STD-1275B & MIL-STD-704A Surge and Spike protection
- Voltage input: 24Vdc nominal (18-36V)
- Power consumption: 2.8W typical
- Chassis grounding

### Electromagnetic
- MIL-STD-461E Electromagnetic compatibility
- CE-102, CS-114, CS-115, CS-116, RE-102, RS-103

### Environmental : shock/vibration/humidity
- MIL-STD-810F, 501.4I, 501.4II, 502.4I, 502.4II, 507.4, 500.4II, 514, 516I, 516VI, 514.5, 512.4
- IP67/68

### Physical
- Dimensions: 169mm (L) x 149 (W) x 65(H), including connectors & hardware
- Weight: 1.260 kg

### Installation
- Set of Four 4x4.5 mounting holes on bottom for mounting to any flat surface.
- Carrying handles - Optional

### Cooling
- No moving parts. Passive cooling.

### Operating temp
- -35°C to +75°C (-31°F to +167°F) / -35°C Cold start-up

### Storage temp
- -45°C to +85°C (-49°F to +185°F)

## Dimensional line drawing
*All measurements are in millimeters*

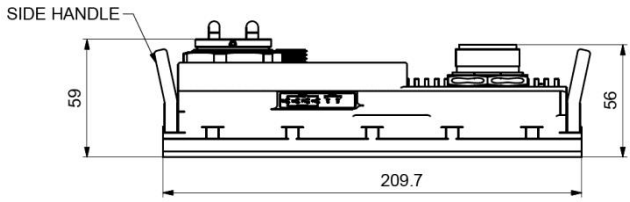


VIEW WITHOUT PROTECTION CAPS

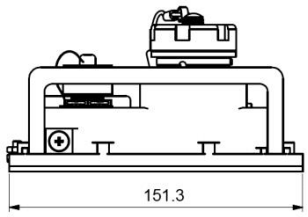


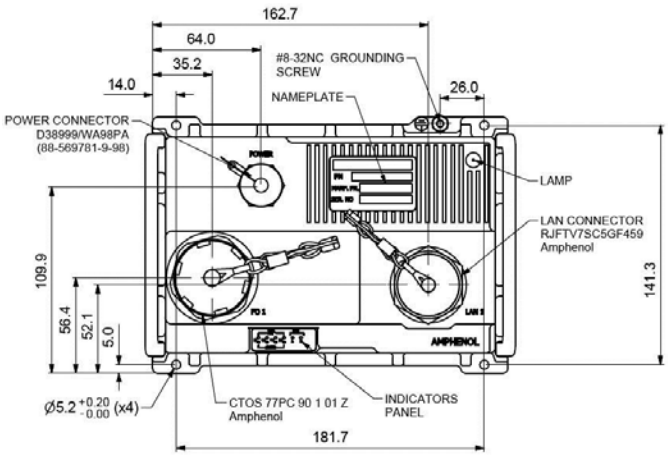


| | | Description |
|---|---|---|
| Part number | RES-GMC-1M-RJF-CTOS | • MIL-STD Rugged Ethernet Media Converter with CTOS fiber connector<br>• 1 x 10/100/1000TX to 1000SX, MM |
| | RES-GMC-1S-RJF-CTOS | • MIL-STD Rugged Ethernet Media Converter with CTOS fiber connector<br>• 1 x 10/100/1000TX to 1000LX, SM, 10 KM |
| | RES-GMC-1M-RJF-TACBEAM | • MIL-STD Rugged Ethernet Media Converter with TAC BEAM fiber connector<br>• 2 x 10/100/1000TX to 2 x 1000SX, MM |
| | RES-GMC-1S-RJF-TACBEAM | • MIL-STD Rugged Ethernet Media Converter with TAC BEAM fiber connector<br>• 2 x 10/100/1000TX to 2 x 1000LX, SM, 10 KM |

▶ For accessories, please consult us.

# RES-GMC with Butt Joint Fiber Connector Military Ethernet Media Converter

NEW

**For harsh environment - Fully MIL-STD compliant**

Amphenol's RES-GMC is a MIL-STD rugged, unmanaged-military-grade security gateway, offering up to 2 Gigabit security gateways per device for unidirectional and data diodes solution for total isolation between two network with different security classification. The unit supports PoE on 2 ports (IEEE802.3af and IEEE802.3at).

Developed for military and harsh environment applications, the RES-GMC features mechanical packaging enhancements designed for MIL-STD-810F airborne and ground environmental compliance and high reliability.
The unit has been especially hardened to improve ingress, impact, and shock/vibration protection, as well as eliminate all moving parts through passive cooling, and interface through sealed MIL-D-38999 circular connectors.

Leveraging best-in-class switching technology, the RES-GMC series serves as a robust solution to extend your Tactical Gigabit Ethernet network connectivity of up to 120Km over fiber. Compact in size, the RES-GMC is particularly useful for remote and space-constrained locations either on ground vehicle environments or airborne.

## Military applications

- Data acquisition & transmission
- Battlefield communication C4ISR
- Rugged Networks
- Combat vehicles
- Avionic & shipboard systems

## Key features

- **Ethernet ports**
  - 10/100/1000 Base TX to 100/1000 Base FX-(MM/SM) Network isolator One way data flow for total isolation between classified and unclassified networks
  - Up to 2 security gateways per device over optical fiber
- **Networking**
  - Full wire-speed forwarding rate
  - Option for Up to 2 ports PoE - IEEE802.3af, IEEE802.3at
  - Auto MDI-II, MDI-X, FDX, HDX, Flow control
  - Auto-negotiation and fixed settings via DIP switch
  - Jumbo frame support
  - Option for one way fiber security
- **Connectors**
  - MIL-D-38999 (Power & Ethernet signals)
  - Power connector type: D38999/24WA98PN
  - LAN connector type: D38999/24WB35SN (2 ports model) or RJFTV (1 port model)
  - Fiber connector type: TVOP arrangement 11-02
- **Chassis**
  - Low profile rugged aluminium extrusion
  - Conductively cooled w/custom internal heat-sinks
  - Ingress protection against sand, dust and moisture
  - Anodize coating, MIL-A-8625, Type II, Class 2
- **Standards**
  - MIL-STD-1275, MIL-STD-704A, MIL-STD-461E,
  - MIL-STD-810F GM, IP67/68
- **Voltage operation**
  - 24VDC (18VDC ~ 36VDC), 48VDC for PoE versions

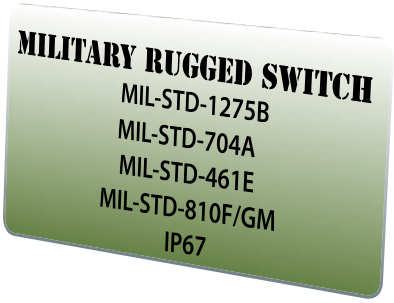

## Product specifications

### Performance
- 26.8 Mpps wire speed forwarding rate
- 20 Gbps maximum forwarding bandwidth
- 4K MAC address
- 2 LED indication (Speed, Link/Activity) per port
- Wire-speed reception and transmission

### Standards compliance
- IEEE 802.3, 10 Mbps 10BASE-T (Ethernet)
- IEEE 802.3u, 100 BASE-TX 100 Mbps (Fast Ethernet)
- IEEE 802.3ab, 1000Base-TX
- IEEE 802.3z, 1000Base-FX Gigabit
- IEEE 802.3af, IEEE802.3at

### Power
- MIL-STD-1275B & MIL-STD-704A Surge and Spike protection
- Voltage input: 24Vdc nominal (18-36V)
- Power consumption: 2.8W typical
- Chassis grounding

### Electromagnetic
- MIL-STD-461E Electromagnetic compatibility
- CE-102, CS-114, CS-115, CS-116, RE-102, RS-103

### Environmental : shock/vibration/humidity
- MIL-STD-810F, 501.4I, 501.4II, 502.4I, 502.4II, 507.4, 500.4II, 514, 516I, 516VI, 514.5, 512.4
- IP67/68

### Physical
- Dimensions: 170mm(L) x 150(W) x 65(H), including connectors & hardware
- Weight: 1 kg

### Installation
- Set of Four 4x4.5 mounting holes on bottom for mounting to any flat surface.
- Carrying handles - Optional

### Cooling
- No moving parts. Passive cooling.

### Operating temp
- -35°C to +75°C (-31°F to +167°F) / -35°C Cold start-up

### Storage temp
- -45°C to +85°C (-49°F to +185°F)

## Dimensional line drawing
*All measurements are in millimeters*

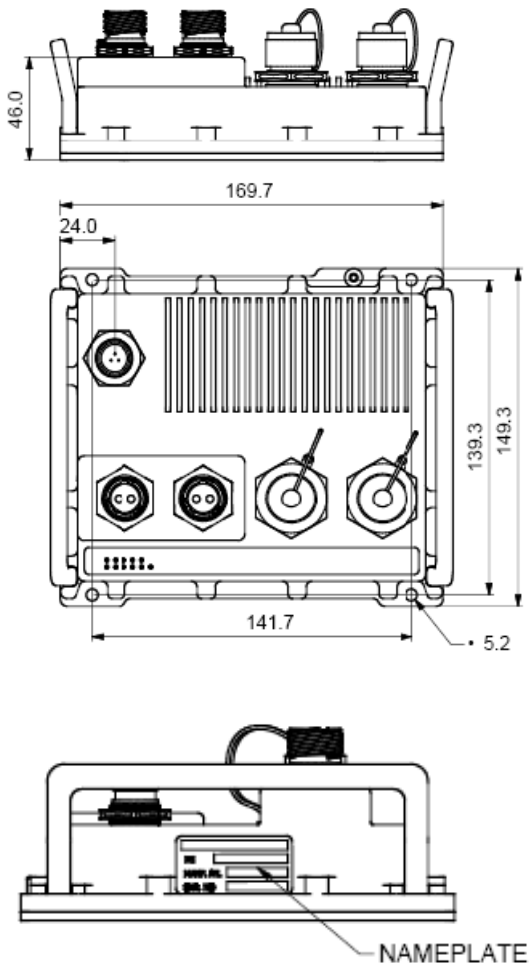


| | | Description |
|---|---|---|
| Part number | RES-GMC-1M | • MIL-STD Rugged Ethernet Media Converter with TVOP connector<br>• 1 x 10/100/1000TX to 1000SX, MM |
| | RES-GMC-1S | • MIL-STD Rugged Ethernet Media Converter with TVOP connector<br>• 1 x 10/100/1000TX to 1000LX, SM, 10 KM |
| | RES-GMC-2M | • MIL-STD Rugged Media Converter with TVOP connector<br>• 2 x 10/100/1000TX to 2 x 1000SX, MM |
| | RES-GMC-2S | • MIL-STD Rugged Media Converter with TVOP connector<br>• 2 x 10/100/1000TX to 2 x 1000LX, SM, 10 KM |

▶ For accessories, please consult us.

# RES-GMC-1M-FORC
# Military Ethernet Media Converter with Remote Control

NEW

**For fiber extension of existing systems on the Field**

Amphenol's RES-GMC-1M-FORC is a MIL-STD rugged, unmanaged-military-grade Media converter, offering one Gigabit copper ports 10/100/1000Base-TX and one 100/1000Base-SX fiber ports.

Combining the RES-GMC-1M-FORC with a fiber drum, your network will be extended on the field.

- Simply add 2 media converters unit 1 and unit 2 + a fiber drum
- Use our special feature: unit 2 is remote controlled by unit 1

Due to extreme low consumption of unit 2 in STANDBY mode, your battery on the field will operate longer.

Developed for military and harsh environment applications, the RES-GMC-1M-FORC features mechanical packaging enhancements designed for MIL-STD-810F airborne and ground environmental compliance and high reliability.
The unit has been especially hardened to improve ingress, impact, and shock/vibration protection, as well as eliminate all moving parts through passive cooling, and interface through sealed MIL-D-38999 circular connectors.

Leveraging best-in-class technology, the RES-GMC-1M-FORC series serves as a robust solution to extend your Tactical Gigabit Ethernet network connectivity over fiber.

### Military applications

- Data acquisition & transmission
- Battlefield communication C4ISR
- Rugged Networks
- Combat vehicles

Where your system can be extended through network.

Unit 1

Fiber drum

### Key features

- **Ethernet ports**
  - 10/100/1000 Base TX to 100/1000 Base SX-(MM) Media converter
- **Networking**
  - Full wire-speed forwarding rate
  - Store-and-forward or Pass through mechanism
  - Auto MDI-II, MDI-X, FDX, HDX, Flow control
  - Auto-negotiation and fixed settings via DIP switch
  - Jumbo frame support
  - Link loss forwarding mechanism
- **Connectors**
  - MIL-D-38999 (Power & Ethernet signals)
  - Fiber connector type: CTOS 77 PC (2 fibers for Ethernet, 1 fiber for remote control)
  - Protective caps over each connector
- **Chassis**
  - Low profile rugged aluminium extrusion
  - Conductively cooled w/custom internal heat-sinks
  - Ingress protection against sand, dust and moisture
  - Anodize coating, MIL-A-8625, Type II, Class 2
  - Color: sand mate
- **Standards**
  - MIL-STD-1275, MIL-STD-704A, MIL-STD-461E,
  - MIL-STD-810F GM, IP67/68

Unit 2

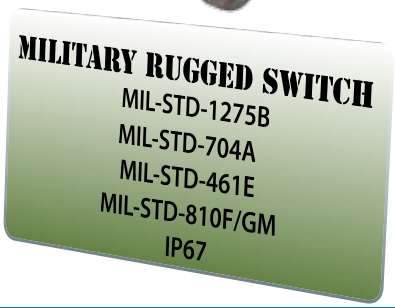

## Product specifications

### Performance
- 26.8 Mpps wire speed forwarding rate
- 2 Gbps maximum forwarding bandwidth
- 4K MAC address
- 2 LED indication (Speed, Link/Activity) per port
- Wire-speed reception and transmission

### Standards compliance
- IEEE 802.3, 10 Mbps 10BASE-T (Ethernet)
- IEEE 802.3u, 100 BASE-TX 100 Mbps (Fast Ethernet)
- IEEE 802.3ab, 1000Base-TX
- IEEE 802.3z, 1000Base-FX Gigabit
- IEEE 802.3x Flow control

### Power
- MIL-STD-1275B & MIL-STD-704A Surge and Spike protection
- Voltage input: 24Vdc nominal (18-36V)
- Power switching of the external DC input of unit 2 upon ON/OFF command from unit 1
- Maximum power consumption: 5W for unit 1, 10W for unit 2
- Standby consumption of unit 2: <0.1W
- Chassis grounding

### Electromagnetic
- MIL-STD-461E Electromagnetic compatibility

### Environmental : shock/vibration/humidity
- MIL-STD-810F, 501.4I, 501.4II, 502.4I, 502.4II, 507.4, 500.4II, 514, 516I, 516VI, 514.5, 512.4
- IP67/68

### Physical
- Dimensions: 170mm(L) x 140(W) x 110(H), including connectors & hardware
- Weight: 1.55kg for unit 1, 1.80kg for unit 2

### Installation
- Set of Four 4x4.3 mounting holes on bottom for mounting to any flat surface.

### Cooling
- No moving parts. Passive cooling.

### Operating temp
- -35°C to +75°C (-31°F to +167°F) / -35°C Cold start-up

### Storage temp
- -45°C to +85°C (-49°F to +185°F)

## Dimensional line drawing
*All measurements are in millimeters*

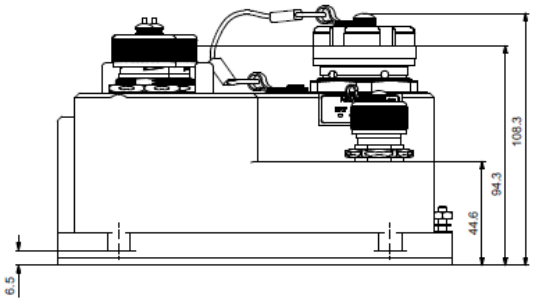


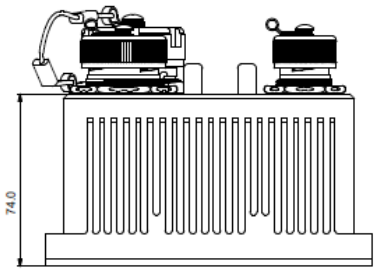


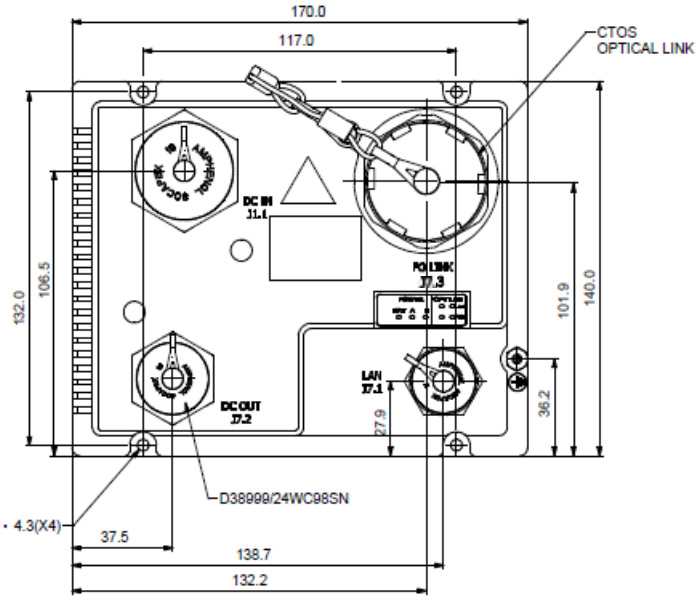


| | | Description |
|---|---|---|
| Part number | RES-GMC-1M-FORC-1 | MIL-STD Rugged Gigabit Media Converter unit 1, 1x RJF connector, 1x fiber CTOS connector, MM, SX |
| | RES-GMC-1M-FORC-2 | MIL-STD Rugged Gigabit Media Converter unit 2, 1x RJF connector, 1x fiber CTOS connector, MM, SX, remote controlled by unit 1 |
| | CTOS drum | Please consult us |

▶ **For accessories, please consult us.**

# RES-SCE-AC-8US

## Unmanaged miniature portable Ethernet switch - 8 fast ports

### Military ethernet switch for harsh environment - Fully MIL-STD compliant

NEW

Amphenol's RES-SCE-AC-8US is a MIL-STD rugged, unmanaged-military-grade Ethernet switch, offering 8 Fast Ethernet 10/100 Ports. The portable rugged Ethernet switch is intended for Command Post Man Packable.

Developed for mobile portable military and harsh environment applications, the RES-SCE-AC-8US features mechanical packaging enhancements designed for MIL-STD-810F airborne and ground environmental compliance and high reliability. The unit has been especially hardened to improve ingress, impact, and shock/vibration protection, as well as eliminate all moving parts through passive cooling, and interface through sealed MIL-SCE circular connectors.

Leveraging best-in-class switching technology, the RES-SCE-AC-8US serves as a robust solution for providing local area network (LAN) connectivity to IP-enabled computing and net-centric devices. Compact in size, the RES-SCE-AC-8US is particularly useful for expanding port density in space-constrained airborne and ground vehicle environments.

### Military applications

- Data acquisition & transmission
- Battlefield communication C4ISR
- Rugged Networks
- Mobile communications
- Combat vehicles
- Avionic & shipboard systems

### Key features

- **Ethernet ports**
  - 8 x switched 10/100 (Fast Ethernet) ports
- **Networking**
  - Full wire-speed forwarding rate
  - Store-and-forward mechanism
  - Auto MDI-II, MDI-X
  - Auto-negotiation protocol
  - Address look-up
- **Connectors**
  - Power + LAN connector : SCE2-B-76A06-07SN-001
- **Chassis**
  - Low profile rugged aluminium extrusion
  - Conductively cooled w/ custom internal heat-sinks
  - Ingress protection against sand, dust and moisture
  - Anodize coating, MIL-A-8625, Type II, Class 2
- **Standards**
  - MIL-STD-461E, MIL-STD-810F/G/GM, IP67/68
- **Voltage operation**
  - 5VDC (USB) INPUT, shared with LAN Port Number 1

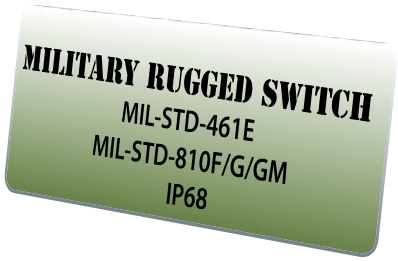

## Product specifications

### Performance
- 128K byte of SRAM for frame buffering
- 2.0 Gbps high-performance memory bandwidth
- LED indication (speed, link/activity) per port - Optional
- Wire-speed reception and transmission
- Integrated address look-up engine
- Automatic address learning

### Standards compliance
- IEEE 802.3 10 Mbps 10BASE-T (Ethernet)
- IEEE 802.3u 100BASE-TX 100 Mbps (Fast Ethernet)
- IEEE 802.3x flow control

### Power
- Voltage input: 5Vdc nominal - Optional USB sourcing
- Power consumption: 2W typical
- Chassis grounding

### Electromagnetic
- MIL-STD-461E electromagnetic compatibility
- CE-102, CS-114, CS-115, CS-116, RE-102, RS-103

### Environmental
- MIL-STD-810F/G/GM
- Random vibration (514.5I), Bench handling (516.6VI), High temp (501.5I, II), Low temp (502.5I), Humidity (507.5II), Air pressure (500.5I, II), Blowing rain (506.5I), Immersion (512.5I), Salt atmosphere (509.5I), Blowing dust (510.5I), Loose cargo vibration (514.6II), Wind analysis
- IP67/68

### Physical
- Dimensions: 82.2mm (L) x 61.4 (W) x 26 (H), Not including connectors Dust Caps.
- Weight: 140g - Not including dust caps

### Installation
- Portable, flat for mounting to any flat surface.

### Cooling
- No moving parts. Passive cooling.

### Operating temp
- -35°C to +75°C (-31°F to +167°F) / -35°C Cold start-up

### Storage temp
- -45°C to +85°C (-49°F to +185°F)

## Dimensional line drawing
*All measurements are in millimeters*

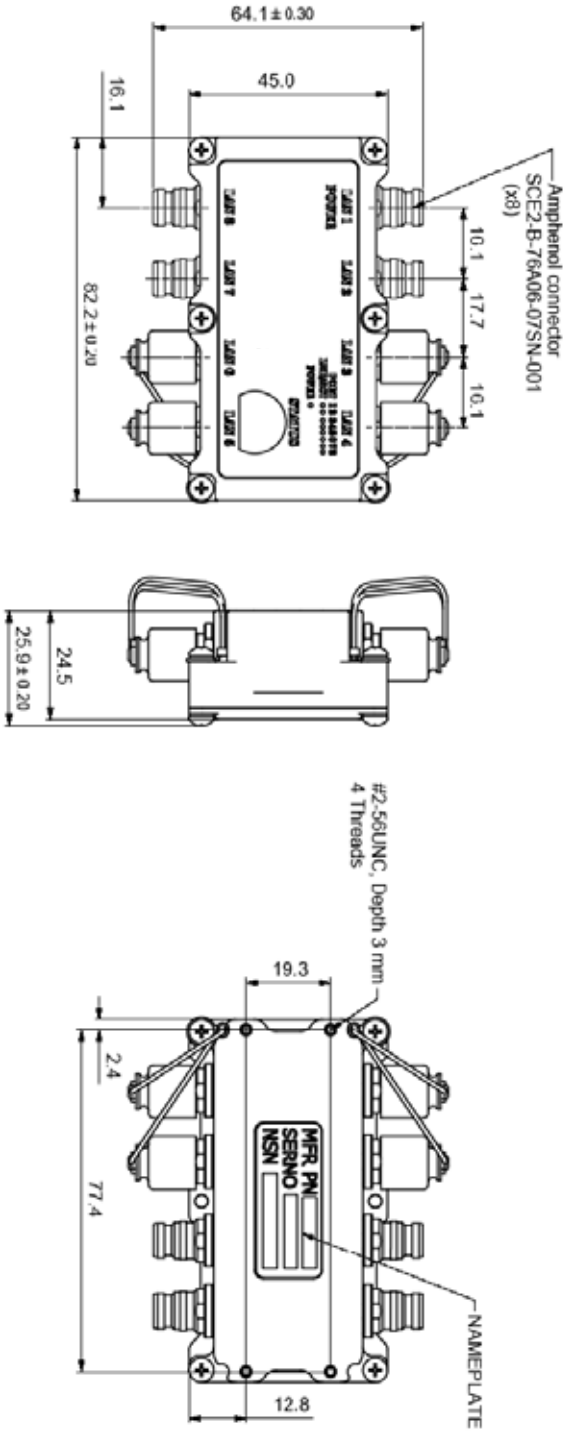


| | | Description |
|---|---|---|
| **Part number** | **RES-SCE-AC-8US** | • RES-SCE-AC-8US<br>• MIL-STD Rugged<br>• 8 x 10/100TX<br>• Unmanaged switch |
| | **RES-SCE-CBL-1M50** | • Starter cable set for MILTECH-308<br>• MIL-SCE to RJ-45 connectors<br>• 1m50 (5 feet) length (Data or Data+Power) |

▶ For accessories, please consult us.

NEW

# RES-SCE-8MG

## Managed miniature portable Ethernet switch - 8 Gigabit ports

### Military ethernet switch for harsh environment - Fully MIL-STD compliant

Amphenol's RES-SCE-8MG is a MIL-STD rugged, managed-military-grade Ethernet switch, offering 8 Gigabit Ethernet 10/100/1000 Ports. The portable rugged Ethernet switch is intended for Command Post Man Packable.

Developed for mobile portable military and harsh environment applications, the RES-SCE-8MG features mechanical packaging enhancements designed for MIL-STD-810F airborne and ground environmental compliance and high reliability. The unit has been especially hardened to improve ingress, impact, and shock/vibration protection, as well as eliminate all moving parts through passive cooling, and interface through sealed miniature circular connectors.

Leveraging best-in-class switching technology, the RES-SCE-8MG serves as a robust solution for providing local area network (LAN) connectivity to IP-enabled computing and net-centric devices. Compact in size, the RES-SCE-8MG is particularly useful for expanding port density in space-constrained airborne and ground vehicle environments.

### Military applications

- Data acquisition & transmission
- Battlefield communication C4ISR
- Rugged Networks
- Mobile communications
- Combat vehicles
- Avionic & shipboard systems

### Key features

- **Ethernet ports**
  - Managed 8 x switched 10/ 100/ 1000 ports
- **Networking**
  - Spanning Tree (802.1d), RSTP (802.1w) and multiple Spanning Tree (802.1S) for fast recovery rings
  - Security via Radius Authentication 802.1x, Port Security, Port Mirroring
  - Multicasting (IGMP Snooping), GARP, GMRP, and GVRP Broadcasting and flooding Control up to 8K Groups
  - 802.1q Tagged based VLAN up to 4K VLAN groups
  - QoS Multi-Layer Classifier, 802.1p, ToS/DSCP traffic classification. WFQ, Strict Queuing.
  - Bridge support for Q-in-Q
  - Link Aggregation 802.3AD
  - WEB, CLI, Telnet Management
- **Connectors**
  - Power connector type: SCE2-B-76A06-07SN
  - LAN connector type: SCE2-B-76A07-14SN-001
  - LED indication per port (speed, link/activity)
- **Chassis**
  - Low profile rugged aluminium extrusion
  - Conductively cooled w/ custom internal heat-sinks
  - Ingress protection against sand, dust and moisture
  - Anodize coating, MIL-A-8625, Type II, Class 2
- **Standards**
  - MIL-STD-1275, MIL-STD-704A, MIL-STD-461E, MIL-STD-810F GM, IP67/68
- **Performance**
  - 26.8 Mpps wire speed forwarding rate
  - 20 Gbps maximum forwarding bandwidth
  - 8K MAC address

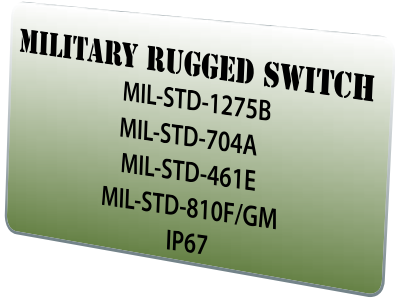


Amphenol

## Product specifications

### Standards compliance
- IEEE 802.1x MAC based Authentication
- IEEE 802.1Q Vlan Tagging
- IEEE 802.1P QoS
- IEEE 802.1S Multiple STP
- IEEE 802.1W Rapid STP
- IEEE 802.3 AD Link Aggregation

### Power
- Exceed MIL-STD-1275B Surge and Spike protection
- Voltage Input: 24Vdc Nominal (16-36 VDC)
- Power Consumption: 7.2W Max - 5W Typical
- Chassis grounding

### Electromagnetic
- MIL-STD-461E Electromagnetic compatibility
- CE-102, CS-114, CS-115, CS-116, RE-102, RS-103

### Environmental
- MIL-STD-810F/G/GM
- Random vibration (514.5I), Bench handling (516.6VI), High temp (501.5I, II), Low temp (502.5I), Humidity (507.5II), Air pressure (500.5I, II), Blowing rain (506.5I), Immersion (512.5I), Salt atmosphere (509.5I), Blowing dust (510.5I), Loose cargo vibration (514.6II), Wind analysis
- IP67/68

### Physical
- Dimensions: 100mm (L) x 89 (W) x 36 (H), including connectors & hardware.
- Weight: 390g

### Installation
- Set of Four 4-40 threads on bottom for mounting to any flat surface

### Cooling
- No moving parts. Passive cooling.

### Operating temp
- -35°C to +75°C (-31°F to +167°F) / -35° C Cold start-up

### Storage temp
- -45°C to +85°C (-49°F to +185°F)

## Dimensional line drawing
*All measurements are in millimeters*

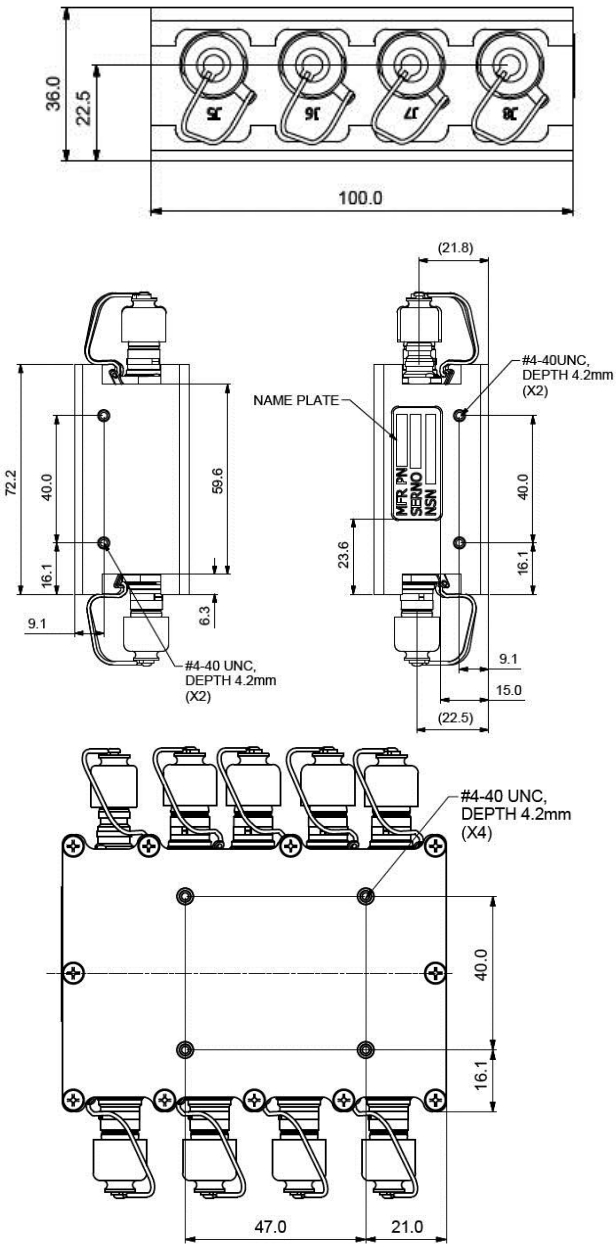


| | | Description |
|---|---|---|
| Part number | RES-SCE-8MG | • MIL-STD Rugged<br>• Managed miniature switch<br>• 8 x 10/100/1000TX<br>• With caps |
| | RES-SCE-8MG-CBL-ETH-RJ45-2M | • Ethernet cordset for LAN 1 to 8<br>• With RJFSFTP5E cable<br>• RJ45 end plug<br>• 2 m long |

▶ For accessories, please consult us.

Amphenol

# RESMLAC-8US-CAPS

## Unmanaged military Ethernet switch, MIL-DTL-38999 connectors 8 fast ports

### Military ethernet switch for harsh environment - Fully MIL-STD compliant

NEW

Amphenol's RESMLAC-8US-CAPS is a MIL-STD rugged, unmanaged-military-grade Ethernet switch, offering 8 Fast Ethernet 10/100 Ports.

Developed for military and harsh environment applications, the RESMLAC-8US-CAPS features mechanical packaging enhancements designed for MIL-STD-810F airborne and ground environmental compliance and high reliability. The unit has been especially hardened to improve ingress, impact, and shock/vibration protection, as well as eliminate all moving parts through passive cooling, and interface through sealed MIL-D-38999 circular connectors.

Leveraging best-in-class switching technology, the RESMLAC-8US-CAPS serves as a robust solution for providing local area network (LAN) connectivity to IP-enabled computing and net-centric devices. Compact in size, the RESMLAC-8US-CAPS is particularly useful for expanding port density in space-constrained airborne and ground vehicle environments.

### Military applications

- Data acquisition & transmission
- Battlefield communication C4ISR
- Rugged Networks
- Mobile communications
- Combat vehicles
- Avionic & shipboard systems

### Key features

- **Ethernet ports**
  - 8 x switched 10/100 (Fast Ethernet) ports
- **Networking**
  - Full wire-speed forwarding rate
  - Store-and-forward mechanism
  - Auto MDI-II, MDI-X
  - Auto-negotiation protocol
  - Address look-up
- **Connectors**
  - MIL-D-38999 (Power & Ethernet signals)
  - Power connector type: D38999/24WA98PA
  - LAN connector type: D38999/24WA35SN
- **Chassis**
  - Low profile rugged aluminium extrusion
  - Conductively cooled w/ custom internal heat-sinks
  - Ingress protection against sand, dust and moisture
  - Anodize Coating, MIL-A-8625, Type II, Class 2
- **Standards**
  - MIL-STD-1275, MIL-STD-704A, MIL-STD-461E, MIL-STD-810F GM, IP67/68
- **Voltage operation**
  - 24VDC (18VDC ~ 36VDC)

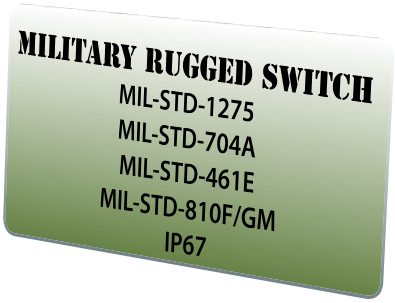

## Product specifications

### Performance
- 128K byte of SRAM for frame buffering
- 2.0 Gbps high-performance memory bandwidth
- 2 LED indication (speed, link/activity) per port
- Wire-speed reception and transmission
- Integrated address look-up engine
- Automatic address learning

### Standards compliance
- IEEE 802.3 10 Mbps 10BASE-T (Ethernet)
- IEEE 802.3u 100BASE-TX 100 Mbps (Fast Ethernet)
- IEEE 802.3x flow control

### Power
- MIL-STD-1275B & MIL-STD 704A surge and spike protection
- Voltage input: 24Vdc nominal (18-32V)
- Power consumption: 2.8W typical
- Chassis grounding

### Electromagnetic
- MIL-STD-461E electromagnetic compatibility
- CE-102, CS-114, CS-115, CS-116, RE-102, RS-103

### Environmental
- MIL-STD-810F, 501.4I, 501.4II, 502.4I, 502.4II, 507.4, 500.4II, 514, 516I, 516Vi, 514.5, 512.4
- IP67/68

### Physical
- Dimensions: 269mm(L) x 133(W) x 65(H), including connectors & hardware

### Installation
- Set of four 4x4.5 mounting holes on bottom for mounting to any flat surface.

### Cooling
- No moving parts. Passive cooling.

### Operating temp
- -35°C to +75°C (-31°F to +167°F) / -35°C Cold start-up

### Storage temp
- -45°C to +85°C (-49°F to +185°F)

## Dimensional line drawing
*All measurements are in millimeters*

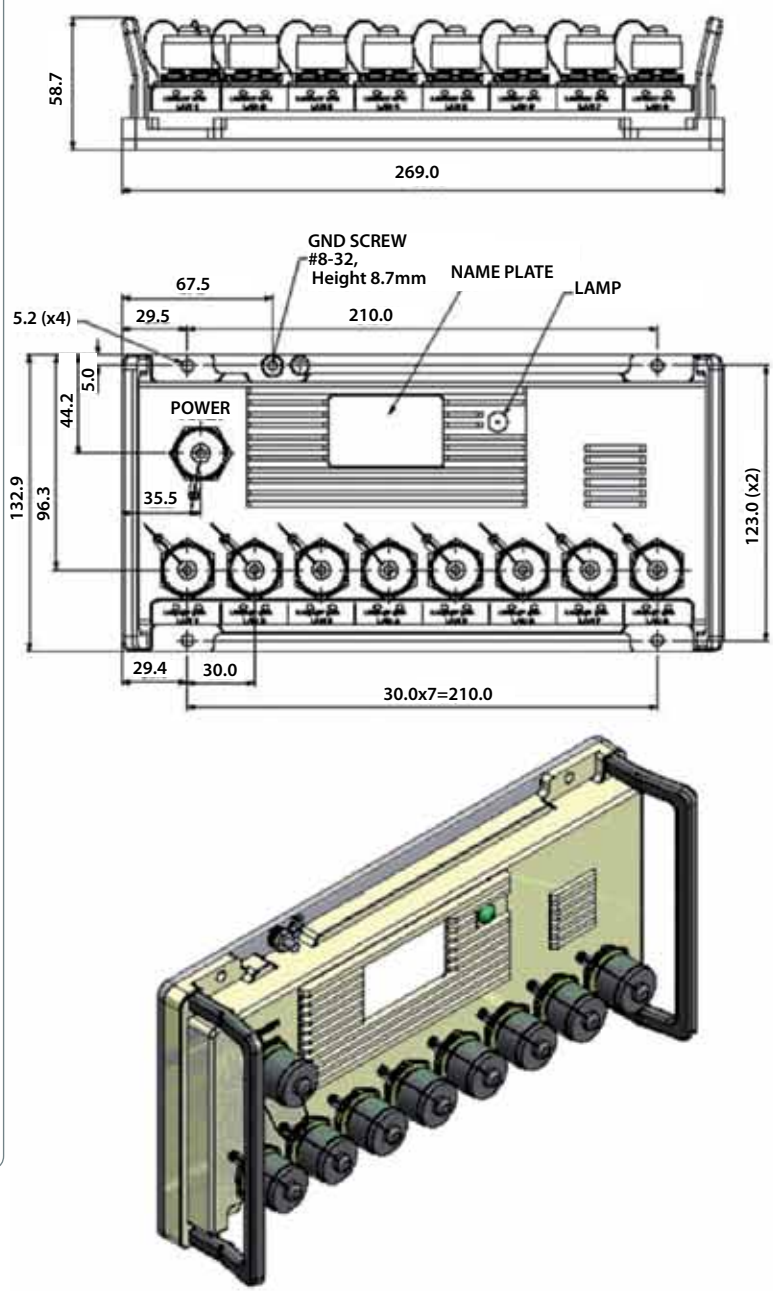


| | | Description |
|---|---|---|
| Part number | RESMLAC 8US CAPS | • MIL-STD rugged<br>• 8 x 10/100TX<br>• Unmanaged switch<br>• with caps<br>• color dark green |
| | RESMLAC 8US CAPS SX | • MIL-STD rugged<br>• 8 x 10/100TX<br>• Unmanaged switch<br>• with caps<br>• color black |
| | RESMLAC 8US CBL 1M50 | • Starter cable set for RESMLAC<br>• MIL-D-38999 to RJ-45 connectors<br>• 1m50 (5 feet) length |

▶ For accessories, please consult us.

# RJSMLAC-8UG-CAPS

## Unmanaged military Ethernet switch, MIL-DTL-38999 connectors 8 Gigabit ports

### Military ethernet switch for harsh environment - Fully MIL-STD compliant

NEW

Amphenol's RESMLAC-8UG-CAPS is a MIL-STD rugged, unmanaged-military-grade Ethernet switch, offering 8 triple speed Ethernet (10/100 /1000) ports. Ethernet connectors are RJFTV, using RJField patented system that allows easy and quick assembly of any standard RJ45 cordset without any tool.

Developed for military and harsh environment applications, the RJSMLAC features mechanical packaging enhancements designed for MIL-STD-810F airborne and ground environmental compliance and high reliability. The unit has been especially hardened to improve ingress, impact, and shock/vibration protection, as well as eliminate all moving parts through passive cooling.

Leveraging best-in-class switching technology, the RJSMLAC serves as a robust solution for providing local area network (LAN) connectivity to IP-enabled computing and net-centric devices. Compact in size, the RJSMLAC is particularly useful for expanding port density in space-constrained airborne and ground vehicle environments.

### Military applications

- Data acquisition & transmission
- Battlefield communication C4ISR
- Rugged Networks
- Mobile communications
- Combat vehicles
- Avionic & shipboard systems

### Key features

- **Ethernet ports**
  - 8 x switched 10/100/1000 (Gigabit Ethernet) ports on RJFTV connectors
- **Networking**
  - Full wire-speed forwarding rate
  - Store-and-forward mechanism
  - Auto MDI-II, MDI-X
  - Auto-negotiation protocol
  - Address look-up
- **Connectors**
  - Power connector type: MIL-DTL-38999/24WA98PN
  - LAN connector type: RJFTV (coupling mechanism from MIL-DTL-38999)
  - LED indication per port (speed, link/activity)
- **Chassis**
  - Low profile rugged aluminium extrusion
  - Conductively cooled w/ custom internal heat-sinks
  - Ingress protection against sand, dust and moisture
  - Finish of epoxy-polyamide paint per MIL-C-83286, olive green, semi-gloss
- **Standards**
  - MIL-STD-1275, MIL-STD-704A, MIL-STD-461E, MIL-STD-810F GM, IP67/68
- **Voltage operation**
  - 24VDC (18VDC ~ 36VDC)

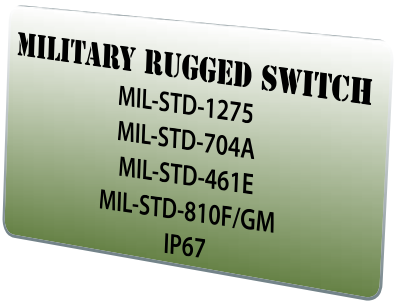

## Product specifications

### Performance
- 128K byte of SRAM for frame buffering
- 2.0 Gbps high-performance memory bandwidth
- 2 LED indication (speed, link/activity) per port
- Wire-speed reception and transmission
- Integrated address look-up engine
- Automatic address learning

### Standards compliance
- IEEE 802.3 10BASE-T (Ethernet)
- IEEE 802.3u 100BASE-T (Fast Ethernet)
- IEEE 802.3ab 1000BASE-T (Gigabit Ethernet)
- IEEE 802.3x flow control

### Power
- MIL-STD-1275B & MIL-STD 704A surge and spike protection
- Voltage input: 24Vdc nominal (18-32V)
- Power consumption: 2.8W typical
- Chassis grounding

### Electromagnetic
- MIL-STD-461E electromagnetic compatibility
- CE-102, CS-114, CS-115, CS-116, RE-102, RS-103

### Environmental
- MIL-STD-810F, 501.4I, 501.4II, 502.4I, 502.4II, 507.4, 500.4II, 514, 516I, 516Vi, 514.5, 512.4
- IP67/68

### Physical
- Dimensions: 269mm(L) x 133(W) x 65(H), including connectors & hardware
- Weight: 1.8kg

### Installation
- Set of four 4x4.5 mounting holes on bottom for mounting to any flat surface.

### Cooling
- No moving parts. Passive cooling.

### Operating temp
- -35°C to +75°C (-31°F to +167°F) / -35°C Cold start-up

### Storage temp
- -45°C to +85°C (-49°F to +185°F)

## Dimensional line drawing
*All measurements are in millimeters*

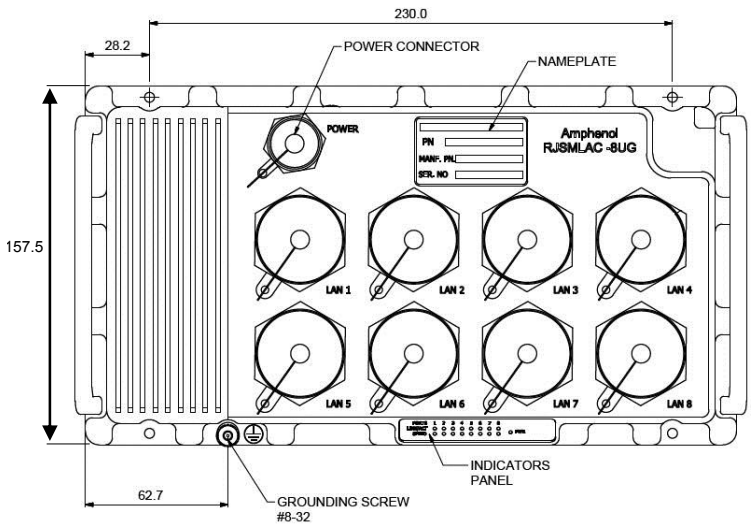


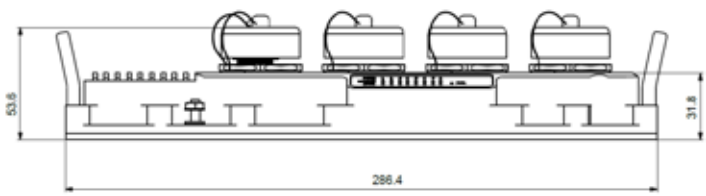


| | | Description |
|---|---|---|
| **Part number** | **RJSMLAC 8UG CAPS** | • MIL-STD rugged<br>• 8 x gigabit ports<br>• Unmanaged switch<br>• with caps and handles<br>• dark green |

▶ **For accessories, please consult us.**

# RJSMLAC-8MG-CAPS

## Managed military Ethernet switch, RJFTV connectors - 8 Gigabit ports

### Military ethernet switch for harsh environment - Fully MIL-STD compliant

NEW

Amphenol's RJSMLAC-8MG-CAPS is a MIL-STD Fully managed Military-grade network switch offering 8 triple speed (10/100/1000) ports. Ethernet connectors are RJFTV, using RJField patented system that allows easy and quick assembly of any standard RJ45 cordset without any tool.

Developed for military and harsh environment applications, the RJSMLAC-8MG-CAPS features mechanical packaging enhancements designed for MIL-STD-810F airborne and ground environmental compliance and high reliability. The unit has been especially hardened to improve ingress, impact, and shock/vibration protection, as well as eliminate all moving parts through passive cooling, and interface through sealed MIL-DTL-38999 circular connectors.

Leveraging best-in-class switching technology, the RJSMLAC-8MG-CAPS serves as a robust solution for providing local area network (LAN) connectivity to IP-enabled computing and net-centric devices. Compact in size, the RJSMLAC-8MG-CAPS is particularly useful for expanding port density in space-constrained airborne and ground vehicle environments.

### Military applications

- Data acquisition & transmission
- Battlefield communication C4ISR
- Rugged Networks
- Mobile communications
- Combat vehicles
- Avionic & shipboard systems

### Key features

- **Ethernet ports**
  - Managed 8 x switched 10/100/1000 ports on RJFTV connectors
- **Networking**
  - Spanning tree (802.1d), RSTP (802.1w) and multiple
  - Spanning tree (802.1S) for fast recovery rings
  - Security via Radius Authentication 802.1x, port security, port mirroring
  - Multicasting (IGMP Snooping), GARP, GMRP, and GVRP, Broadcasting and flooding control up to 8K groups.
  - 802.1q tagged based VLAN up to 4K VLAN groups.
  - QoS multi-layer classifier, 802.1p, ToS/DSCP traffic classification. WFQ, Strict Queuing.
  - Bridge support for Q-in-Q.
  - Link aggregation 802.3AD.
  - WEB, CLI, Telnet management.
- **Connectors**
  - Power connector type: MIL-DTL-38999/24WA98PA
  - LAN connector type: RJFTV (coupling mechanism from MIL-DTL-38999)
  - LED indication per port (Speed, Link/Activity)
- **Chassis**
  - Low profile rugged aluminium extrusion
  - Conductively cooled w/custom internal heat-sinks
  - Ingress protection against sand, dust and moisture
  - Anodize coating, MIL-A-8625, Type II, Class 2
- **Standards**
  - MIL-STD-1275, MIL-STD-704A, MIL-STD-461E,
  - MIL-STD-810F GM, IP67/68

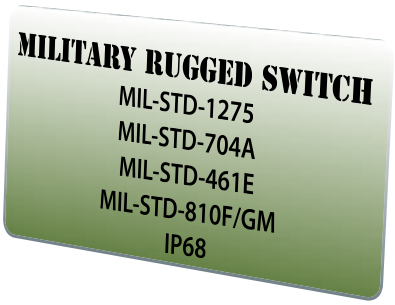

## Product specifications

### Volage operation
- 24VDC (18VDC ~ 32VDC)

### Performance
- 26.8 Mpps wire speed forwarding rate
- 20 Gbps maximum forwarding bandwidth
- 8K MAC address

### Standards compliance
- IEEE 802.1x MAC based authentication
- IEEE 802.1Q Vlan tagging
- IEEE 802.1P QoS
- IEEE 802.1S Multiple STP
- IEEE 802.1W Rapid STP
- IEEE 802.3AD Link aggregation

### Power
- Exceed MIL-STD-1275B surge and spike protection
- Voltage input: 24Vdc nominal (18-32V)
- Power consumption: 2.8W typical
- Chassis grounding

### Electromagnetic
- MIL-STD-461E electromagnetic compatibility
- CE-102, CS-114, CS-115, CS-116, RE-102, RS-103

### Environmental : shock/vibration/humidity
- MIL-STD-810F, 501.4I, 501.4II, 502.4I, 502.4II, 507.4, 500.4II, 514, 516I, 516VI, 514.5, 512.4
- IP67/68

### Physical
- Dimensions: 287mm(L) x 147(W) x 50(H), including connectors & hardware
- Weight: 1.8 kg

### Installation
- Set of four 4.5 mounting holes on bottom for mounting to any flat surface.
- Carrying handles

### Cooling
- No moving parts. Passive cooling.

### Operating temp
- -35°C to +75°C (-31°F to +167°F) / -35°C Cold start-up

### Storage temp
- -45°C to +85°C (-49°F to +185°F)

## Dimensional line drawing
*All measurements are in millimeters*

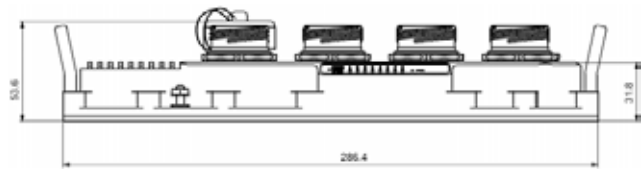


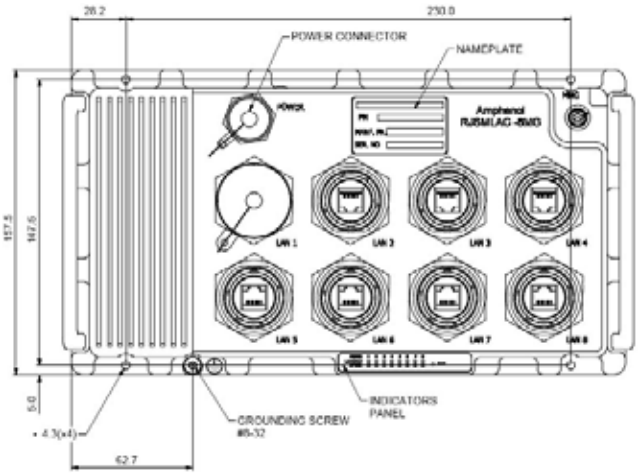


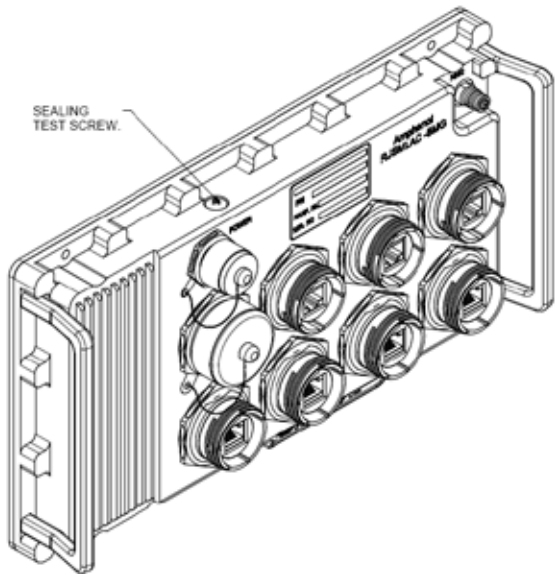


| | | Description |
|---|---|---|
| **Part number** | **RJSMLAC 8MG CAPS** | • MIL-STD rugged<br>• 8 x 10/100/1000TX with RJFTV<br>• Managed switch<br>• With caps and handles<br>• Dark green |

▶ **For accessories, please consult us.**

# RESMLAC-8MG-CAPS

## Managed military Ethernet switch, MIL-DTL-38999 connectors 8 Gigabit ports

### Military ethernet switch for harsh environment - Fully MIL-STD-compliant

NEW

Amphenol's RESMLAC-8MG-CAPS is a MIL-STD fully managed Military-grade network switch offering 8 triple speed (10/100/1000) ports.

Developed for military and harsh environment applications, the RESMLAC-8MG-CAPS features mechanical packaging enhancements designed for MIL-STD-810F airborne and ground environmental compliance and high reliability. The unit has been especially hardened to improve ingress, impact, and shock/vibration protection, as well as eliminate all moving parts through passive cooling, and interface through sealed MIL-DTL-38999 circular connectors.

Leveraging best-in-class switching technology from Amphenol, the RESMLAC-8MG-CAPS serves as a robust solution for providing local area network (LAN) connectivity to IP-enabled computing and net-centric devices. Compact in size, the RESMLAC-8MG-CAPS is particularly useful for expanding port density in space-constrained airborne and ground vehicle environments.

### Military applications

- Data acquisition & transmission
- Battlefield communication C4ISR
- Rugged Networks
- Mobile communications
- Combat vehicles
- Avionic & shipboard systems

### Key features

- **Ethernet ports**
  - Managed 8 x switched 10/100/1000 ports
- **Networking**
  - Spanning tree (802.1d), RSTP (802.1w) and multiple
  - Spanning tree (802.1S) for fast recovery rings
  - Security via Radius authentication 802.1x, port security, port mirroring
  - Multicasting (IGMP Snooping), GARP, GMRP, and GVRP, Broadcasting and flooding control up to 8K groups.
  - 802.1q tagged based VLAN up to 4K VLAN groups.
  - QoS multi-layer classifier, 802.1p, ToS/DSCP traffic classification. WFQ, Strict Queuing.
  - Bridge support for Q-in-Q.
  - Link aggregation 802.3AD.
  - WEB, CLI, Telnet management.
- **Connectors**
  - Power connector type: MIL-DTL-38999/24WA98PA
  - LAN connector type: MIL-D-38999/24WB35SN
  - LED indication per port (Speed, Link/Activity)
- **Chassis**
  - Low profile rugged aluminium extrusion
  - Conductively cooled w/custom internal heat-sinks
  - Ingress protection against sand, dust and moisture
  - Anodize coating, MIL-A-8625, Type II, Class 2
- **Standards**
  - MIL-STD-1275, MIL-STD-704A, MIL-STD-461E,
  - MIL-STD-810F GM, IP67/68
- **Voltage operation**
  - 24VDC (18VDC ~ 32VDC)

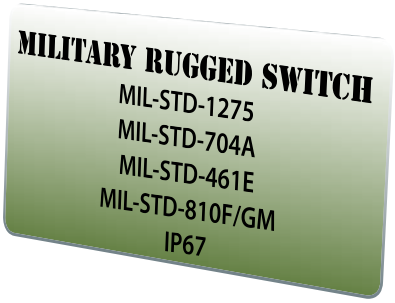

## Product specifications

### Performance
- 26.8 Mpps wire speed forwarding rate
- 20 Gbps maximum forwarding bandwidth
- 8K MAC address

### Standards compliance
- IEEE 802.1x MAC based authentication
- IEEE 802.1Q Vlan Tagging
- IEEE 802.1P QoS
- IEEE 802.1S Multiple STP
- IEEE 802.1W Rapid STP
- IEEE 802.3AD Link aggregation

### Power
- Exceed MIL-STD-1275B surge and spike protection
- Voltage input: 24Vdc nominal (18-32V)
- Power consumption : 7W typical
- Chassis grounding

### Electromagnetic
- MIL-STD-461E electromagnetic compatibility
- CE-102, CS-114, CS-115, CS-116, RE-102, RS-103

### Environmental : shock/vibration/humidity
- MIL-STD-810F, 501.4I, 501.4II, 502.4I, 502.4II, 507.4, 500.4II, 514, 516I, 516VI, 514.5, 512.4
- IP67/68

### Physical
- Dimensions: 269mm(L) x 133(W) x 79(H), including connectors & hardware
- Weight: 1.5 kg

### Installation
- Set of four 4.5 mounting holes on bottom for mounting to any flat surface.
- Carrying handles

### Cooling
- No moving parts. Passive cooling.

### Operating temp
- -35°C to +75°C (-31°F to +167°F) / -35°C Cold start-up

### Storage temp
- -45°C to +85°C (-49°F to +185°F)

## Dimensional line drawing
*All measurements are in millimeters*

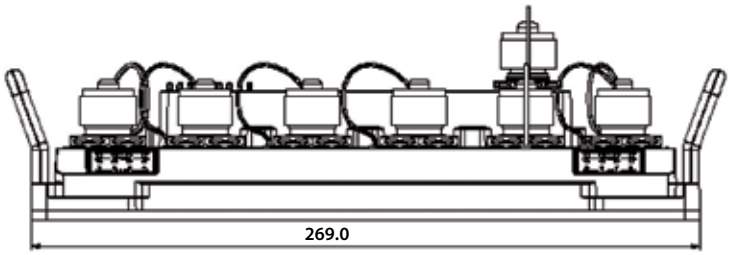


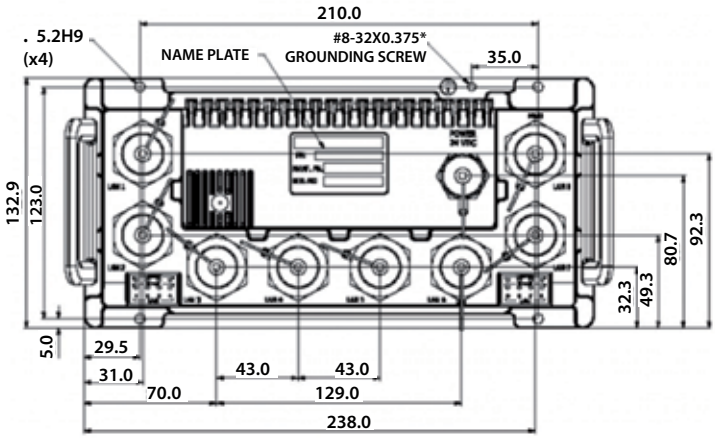


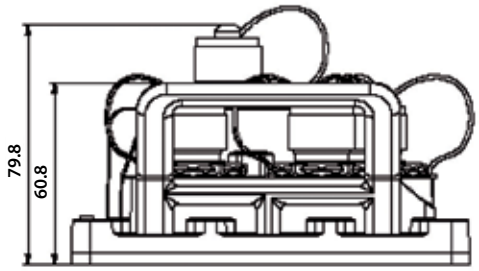


| | | Description |
|---|---|---|
| Part number | RESMLAC 8MG CAPS | • MIL-STD Rugged<br>• 8 x 10/100/1000TX<br>• Managed switch<br>• with caps and handles<br>• dark green |
| | RESMLAC 8MG CBL 1M50 | • Starter cable set for RESMLAC<br>• MIL-D-38999 to RJ-45 connectors<br>• 1m50 (5 feet) length |

▶ For accessories, please consult us.

Amphenol

# RESMLAC-8MG-CAPS-F35

## Managed military Ethernet switch, MIL-DTL-38999 connectors 8 Gigabit ports

### Military ethernet switch for harsh environment - Fully MIL-STD-compliant

NEW

Amphenol's RESMLAC 8MG CAPS F35 is a MIL-STD fully managed Military-grade network switch offering 8 triple speed (10/100/1000) ports.

Developed for military and harsh avionic applications, the RESMLAC 8MG CAPS F35 features mechanical packaging enhancements designed for MIL-STD-810F airborne and ground environmental compliance and high reliability. The unit has been especially hardened to improve ingress, impact, and shock/vibration protection, as well as eliminate all moving parts through passive cooling, and interface through sealed MIL-DTL-38999 circular connectors.

Leveraging best-in-class switching technology from Amphenol, the RESMLAC 8MG CAPS F35 serves as a robust COTS solution for providing local area network (LAN) connectivity to IP-enabled computing and net-centric devices. Compact in size, the RESMLAC 8MG CAPS F35 is particularly useful for expanding port density to tactical IP routers in space-constrained airborne and ground vehicle environments.

### Military applications

- Data acquisition & transmission
- Battlefield communication C4ISR
- Rugged Networks
- Mobile communications
- Combat vehicles
- Avionic & shipboard systems

### Key features

- **Ethernet ports**
  - Managed 8 x switched 10/100/1000 ports
- **Networking**
  - Spanning tree (802.1d), RSTP (802.1w) and multiple
  - Spanning tree (802.1S) for fast recovery rings
  - Security via Radius authentication 802.1x, port security, port mirroring
  - Multicasting (IGMP Snooping), GARP, GMRP, and GVRP, Broadcasting and flooding control up to 8K groups.
  - 802.1q tagged based VLAN up to 4K VLAN groups.
  - QoS multi-layer classifier, 802.1p, ToS/DSCP traffic classification. WFQ, Strict Queuing.
  - Bridge support for Q-in-Q.
  - Link aggregation 802.3AD.
  - WEB, CLI, Telnet management.
- **Connectors**
  - Power connector type: MIL-DTL-38999/24WB35PN
  - LAN connector type: MIL-D-38999/24WF35PN
  - LED indication per port (Speed, Link/Activity)
- **Chassis**
  - Low profile rugged aluminium extrusion
  - Conductively cooled w/custom internal heat-sinks
  - Ingress protection against sand, dust and moisture
  - Anodize coating, MIL-A-8625, Type II, Class 2
- **Standards**
  - MIL-STD-1275B, MIL-STD-704A, MIL-STD-461A,
  - MIL-STD-810F GM, IP67/68
- **Voltage operation**
  - Nominal 24VDC

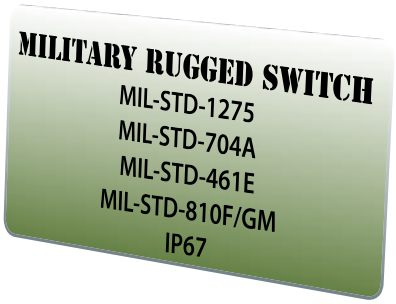

## Product specifications

### Performance
- 26.8 Mpps wire speed forwarding rate
- 20 Gbps maximum forwarding bandwidth
- 8K MAC address

### Standards compliance
- IEEE 802.1x MAC based authentication
- IEEE 802.1Q Vlan Tagging
- IEEE 802.1P QoS
- IEEE 802.1S Multiple STP
- IEEE 802.1W Rapid STP
- IEEE 802.3AD Link aggregation

### Power
- Exceed MIL-STD-1275B surge and spike protection
- Voltage input: 24Vdc nominal (18-32V)
- Power consumption : 7W typical
- Chassis grounding

### Electromagnetic
- Exceed MIL-STD-461A electromagnetic compatibility
- RE-02, RS-03

### Environmental : shock/vibration/humidity
- MIL-STD-810F, 501.4I, 501.4II, 502.4I, 502.4II, 507.4, 500.4II, 514, 516I, 516VI, 514.5, 512.4

### Physical
- Dimensions: 209.6mm(L) x 136(W) x 44.4(H), including connectors
- Weight: 1.1 kg

### Installation
- Set of four #10-32 captive screws for mounting to any flat surface

### Cooling
- No moving parts. Passive cooling.

### Operating temp
- -35°C to +75°C (-31°F to +167°F) / -35°C Cold start-up

### Storage temp
- -45°C to +85°C (-49°F to +185°F)

## Dimensional line drawing
*All measurements are in millimeters*

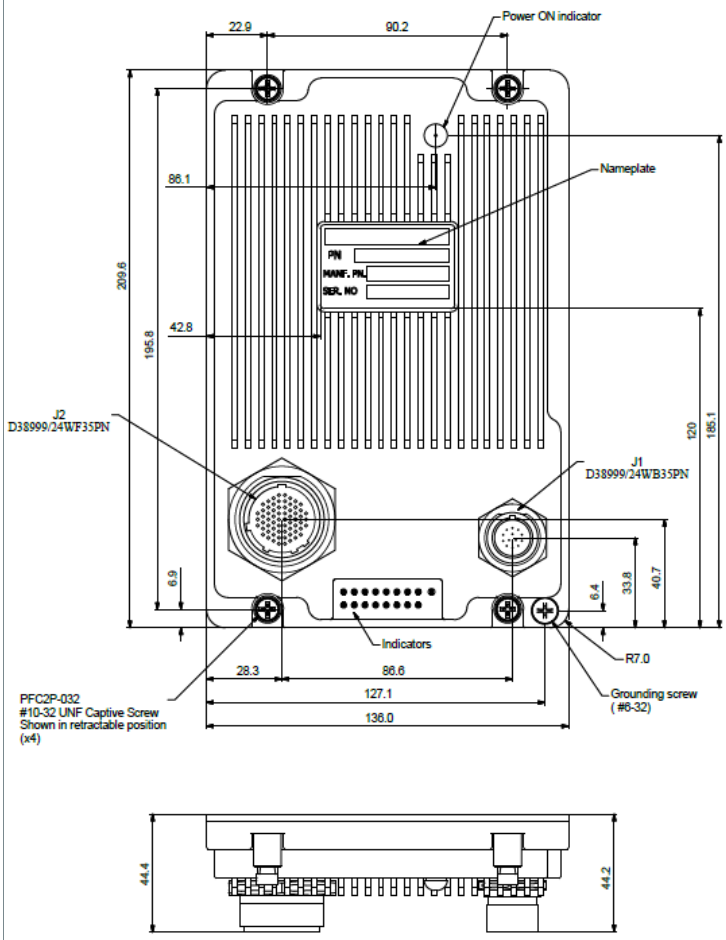


| Part number | | Description |
|---|---|---|
| | RESMLAC 8MG CAPS F35 | • Managed military grade Gigabit switch<br>• 8 x 10/100/1000TX |

▶ For accessories, please consult us.

Amphenol

# RESMLAC-28MG

## Managed military Ethernet switch - 24 Gigabit + 4 combo 10G ports

### Military ethernet switch for harsh environment - Fully MIL-STD compliant

NEW

The RESMLAC-28MG is a MIL-STD Fully managed Military-grade network switch offering 24 triple speed (10/100/1000) ports + 4 x 10G fiber ports.
The RESMLAC-28MG is compatible with all the newest military industry network protocols for redundant link topology, security, multi-cast and management requirements.

Developed specifically for military and harsh mobile applications, the RESMLAC-28MG features mechanical packaging enhancements designed for MIL-STD-810F airborne and ground environmental compliance and high reliability. The unit has been especially hardened to improve ingress, impact, and shock/vibration protection, as well as eliminate all moving parts through passive cooling, and interface through sealed MIL-D-38999 circular connectors and SCE.

Leveraging best-in-class switching technology, the RESMLAC-28MG serves as a robust COTS solution for providing local area network (LAN) connectivity to IP-enabled computing and net-centric devices. Compact in size, the RESMLAC-28MG is particularly useful for expanding port density to tactical IP routers in space-constrained airborne and ground vehicle environments.

### Military applications

- Data acquisition & transmission
- Battlefield communication C4ISR
- Rugged Networks
- Mobile communications
- Combat vehicles
- Avionic & shipboard systems

### Features

- **Ethernet ports**
  - Managed 24 x switched 10/100/1000 ports (including 4 Combo ports) + 4x10Gbps Fiber ports - Total of 28 ports.
  - The 4 Combo ports provide alternative 4 ports 100/1000Base-FX ports
- **Networking**

**General**

- Wire-speed hardware-based 28 ports gigabit ethernet switch
- Multicasting (IGMP Snooping), GARP, GMRP, MLD and GVRP
- Multicast groups up to 8K for both IPv4 and IPv6
- Broadcasting and flooding control up to 8K groups
- 802.1q tagged based VLAN up to 4K VLAN groups
- Link Aggregation 802.3ad, up to 16 members in group
- Link Aggregation mechanism based on L2/ L3/ L4 parameters
- Jumbo Frame support up to 10K
- WEB, CLI, Telnet Management

**Quality of service**

- QoS Multi-Layer Classifier: 802.1p, EtherType, VLAN-ID, IPv4/ 6 DSCP/ ToS, and UDP/TCP ports & ranges traffic classification
- Per port WFQ and Strict Queuing scheduling
- DSCP remarking for both IPv4 and IPv6 frames
- Ingress policer and ingress shaper per port with 500Kbps granularity
- Egress shaper per port with 500Kbps granularity
- Full-duplex flow control (IEEE802.3X) and half-duplex backpressure, symmetric and asymmetric.

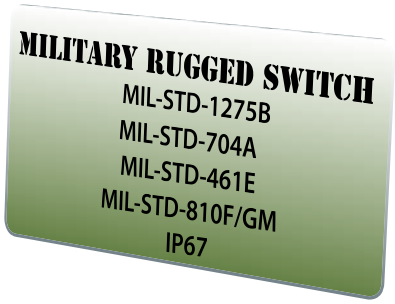

...

**Security**

- Security via Radius authentication 802.1x, Port/MAC access control
- Port security
- Per port ingress and egress port mirroring
- Mirroring per VLAN and per content awareness match
- Private VLAN support per VLAN (Isolated and Promiscuous ports)
- Content Aware Policers:
  - 128 Content Aware Policers
  - 16 Content Aware rate policers with rates from 1fps to 32 million fps
  - 8 UDP/TCP port range policers
  - Advanced ACL through hardware based match patterns
  - Content Aware Policers for generic MAC, ARP, IPv4, IPv6 protocols
  - No restriction on any mix of entries to Content Aware Policers
  - Contente Aware Policers actions are permit/deny, police, count, snoop and mirror
  - Special support for IP fragments, UDP/TCP port ranges and ARP
  - Extensive CPU DoS prevention
  - Surveillance functions by Content Aware Policers counters
  - Multiple ACLs per port for optimal usage of Content Aware Policers
- Storm controllers for flooded broadcast, multicast and unicast

**Redundancy and ring protection**

- Spanning tree (802.1d), RSTP (802.1w) and multiple Spanning tree (802.1S) for fast recovery rings
- RPR for up to 30 units per ring with recovery time <50ms hardware based
- RPR for up to 30 units per ring with recovery time <50ms hardware
- 20-Gbps bandwidth for ring topology
- QoS consistency across stack / ring
- Mirroring across stack / ring
- Link aggregation groups spanning multiple switches in stack/ring

**Connectors**

- 2 x Power connector type: MIL-DTL-38999/24WC4P (1 optional)
- 24 x LAN connector type: SCE2-B-76A07-14SN-001 (4 ports are Gigabit Combo ports - 10/100/1000 or 1000FX fiber)
- 4 x LAN Fiber connectors type: MIL-D-38999 TVOP
- 1 x Serial interface, shared with LAN port #1
- LED indication per Port (Speed, Link/Activity) per Unit (Power A, Power B)

## Dimensional line drawing

*All measurements are in millimeters*

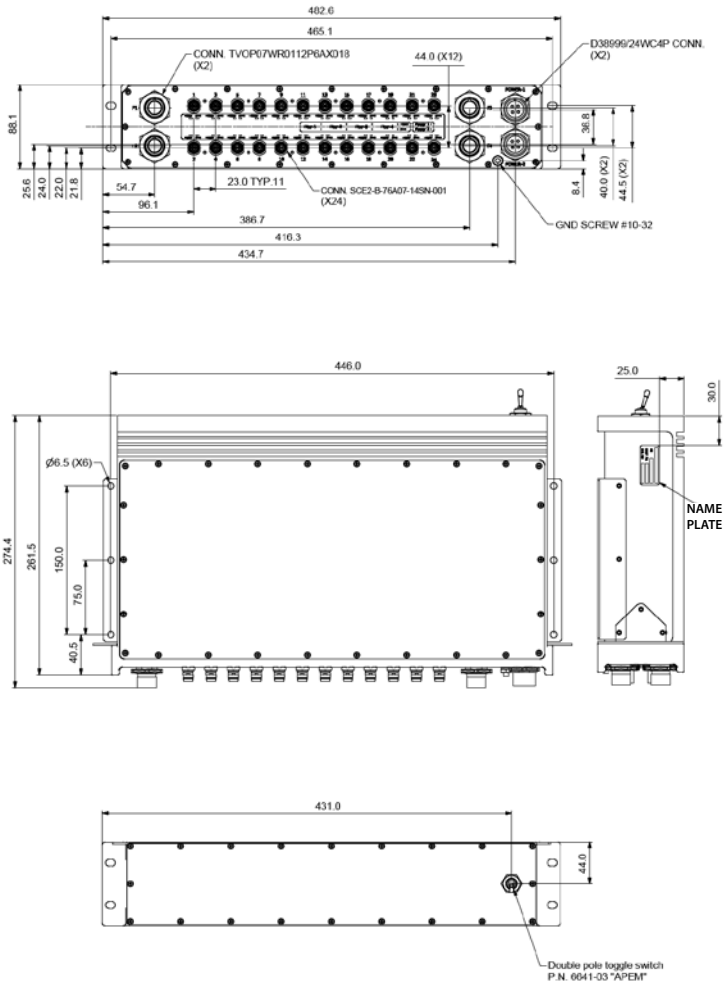


Amphenol

- **Chassis**
  - Low profile rugged aluminium extrusion
  - Conductively cooled w/custom internal heat-sinks
  - Ingress protection against sand, dust and moisture
  - Anodize coating, MIL-A-8625, Type II, Class 2
- **Standards**
  - MIL-STD-1275B, MIL-STD-704A, MIL-STD-461E, MIL-STD-810F GM, IP67
  - Support up to 50ms holdup time, and 6VDC drops
- **Voltage operation**
  - Redundant with load sharing Power Supplies 24VDC, 48VDC, or 90~230VAC
- **Performance**
  - 96.8 Mbps wire speed forwarding rate
  - 56 Gbps maximum forwarding bandwidth
  - 8K MAC address
- **Power**
  - Exceed MIL-STD-1275B and MIL-STD-704A Surge and Spike protection with 50ms holdup time and 6VDC drops
  - Voltage input: 24Vdc nominal (18-32V), option for redundant Power supply, 48VDC, and 90~230VAC
  - Power consumption: 20W typical
  - Chassis grounding
- **Electromagnetic**
  - MIL-STD-461E Electromagnetic compatibility
  - CE-102, CS-114, CS-115, CS-116, RE-102, RS-103
- **Shock / Vibration / Humidity**
  - MIL-STD-810F, 501.4I, 501.4II, 502.4I, 502.4II, 507.4, 500.4II, 514, 516I, 516VI, 514.5, 512.4
- **Physical**
  - Dimensions: 440mm (L) x 200mm (W) x 88(H), including connectors & hardware, 2U, 19" rack
  - Weight: 5.6 kg
- **Installation**
  - Set of four 4.5mm mounting holes on bottom for mounting to any flat surface
  - 19" standard mounting ears
- **Cooling**
  - No moving parts. Passive cooling.
- **Operating temp**
  - -35°C to +75°C (-31°F to +167°F) / -35°C cold start-up
- **Storage temp**
  - -45°C to +85°C (-49°F to +185°F)

| | | Description |
|---|---|---|
| **Part number** | **RESMLAC 28MG** | • Managed military grade Gigabit switch<br>• → 24 x 10/100/1000TX |
| | ***Options*** | *Consult us for options such as additional ports 4 x Up to 10G Fiber ports* |

▶ **For accessories, please consult us.**

# RJSML-8US1 & RJSML-8UG1

## Unmanaged military Ethernet switch - Fast or Gigabit

### Military ethernet switch for harsh environment with industrial EMI compliancy

### Sealed, rugged & unmanaged switch

Amphenol offers an unmanaged Ethernet switch with 8 gigabit ports RJSML-8UG1.
The switch can withstand a variety of extreme conditions. Whatever the situation - high temperatures, extreme shocks & vibrations, dust particles or even liquid immersion- there is a solution available.

The switch electronics are sealed within a waterproof IP68 metallic enclosure.
The conductive cadmium plating is suitable for most demanding EMI-RFI environments. Black paint is also offered when RoHS is required (other colors available).
The I/O interface includes redundant power inputs as well as waterproof rugged RJ45 connectors from the RJFTV FIELD threaded product series based on MIL-DTL-38999 (Series III) metallic shell size 19. This serie enables the transformation without tooling of any standard RJ45 cordset into a robust and waterproof connection system.

### Military applications

- Battlefield communication C4ISR
- Rugged Networks
- Mobile communications
- Avionic & shipboard systems

### Key features

- **Rugged environmental feature**
  - Rugged metal packaging with cadmium or paint protection
  - Mil-DTL-38999 III connectors for both power and Ethernet ports
  - IP65/IP68 rated when mated
  - Power filtering and protection (-704 option)
    - MIL- STD-461E (CE03) 600V spike suppressor
    - MIL- STD-704A
    - MIL- STD-1275A
    - RT CA/DO- 160B
  - MIL-STD-810F shocks
  - RTCA/DO- 160C Vibrations
  - Full-Duplex operation with flow control (no collisions!)
  - MIL STD 810F altitude 50,000 ft (15,000 m)
  - Auto-detecting, auto-crossover and auto-polarity
  - Broadcast storm protection
- **Models 8US1**
  - 8 ports 10/100-BaseT(X)
  - Wide operating temperature range of –40°C to 70°C
- **Models 8UG1**
  - 8 ports 10/100/1000-BaseT(X)
  - Wide operating temperature range of –10°C to 60°C
  - Supports Jumbo frame transmission up to 9kbytes
- **Models 8UG1-ET**
  - 8 ports 10/100/1000-BaseT(X)
  - Wide operating temperature range of –40°C to 70°C
  - Supports Jumbo frame transmission up to 9kbytes

## IEEE Ethernet standards

| Models | Features | 802.3/u | 802.3x | 802.3ab |
|---|---|---|---|---|
| RJS XX 8US1 XX | Unmanaged - Fast | ● | ● | X |
| RJS XX 8UG1 XX | Unmanaged - Gigabit | ● | ● | ● |

| | |
|---|---|
| IEEE 802.3/u | 10 Mbps & 100 Mbps fast Ethernet |
| IEEE 802.3x | Full-Duplex with flow control |
| IEEE 802.3ab | 1000 Mbps Gigabit Ethernet |

## Ethernet features

| | |
|---|---|
| **RJ45 Ports** | 8 shielded RJ45 ports 10/100 BaseT(X) or 1000 Base T(X) |
| **Connectors for RJ45 ports** | RJFTV: jam nut receptacle based on MIL-DTL-38999 III<br>Olive drab cadmium or nickel plated |
| **RJ45 speed** | 10, 100 or 1000 Mbps auto -negotiation |
| **Full / Half duplex** | Automatic |
| **MDI/MDIX** | Auto-crossover |

## Environmental specifications

| | |
|---|---|
| **Safety** | UL 60950-1, CAN/CSA-C22.2 No.60950 |
| **EMI emissions** | U.S.A.: FCC Part 15 CISPR 22<br>U.E. EN55011, EN61000-6-4, EN55022 Class A, EN61000-3-2/3, EN55024, IEC61000-4-2/3/4/5/6/8, EN61000-6-2 |
| **Shocks** | MIL-STD-810F: 40g, 11 ms, 18 saw tooth shocks |
| **Vibrations** | RTCA/DO-160C sinusoidal vibrations 5-55 Hz: 0.01 inch: 55-500 Hz : 1.5 g |
| **Altitude** | MIL-STD-810F: 50.000 ft - 15.000 m |
| **Temperature** | Operating models 8UG1: -10°C to +60°C<br>models 8US1: -40°C to +70°C<br>models 8UG1-ET: -40°C to + 70°C<br>Storage all models: -40°C to +85°C |
| **Weight** | approx 2.8 kg |

## Power supply

| | |
|---|---|
| **Input voltage** | 8US1, 8UG1, & 8UG1-ET: 12-48 VDC, redundant power input (P1 and P2)<br>8US1-704 & 8UG1-704: 12-33 VDC, single power input (P1 only)<br>8US1-PSM & 8UG1-PSM: 85-264 VAC single power input |
| **Input power** | 5 W max |
| **Connectors for power** | MIL-DTL-38999 III jam nut receptacle, olive drab cadmium or nickel plated<br>1 connector TVx07xx0935P: 6 cts # 22D (wire 0.38 $mm^2$ maxi) |
| **"OK" contact output** | Sourcing power ; maximum current: 1 A @ 24VDC<br>Not available for -704 and -PSM options |

| Additional power protection for models MG7F3G-704 (option-704) | |
|---|---|
| MIL-STD-461E | CE102 conducted emission |
| DEF-STAN-59-41 | DCE01/DCE02 |
| DEF-STAN-61-5 | Pt 6 |
| MIL-STD-704A | 600V input transient, applied for 10us |
| MIL-STD-1275A | Spikes: +/- 250 V for 100us<br>Surges: 100 V for 50 ms at 0.5 mohm<br>Ripple: 14VAC pk-pk |

## Description

1. IP68 aluminium enclosure with cadmium conductive plating or black paint (RoHS)
2. Redundant power inputs
3. Balance pressure vent
4. 8 rugged IP68 RJF TV Ethernet ports
5. Fixture for vertical mounting

***Optional caps available***

**IMPORTANT NOTE**
This model has no LED indicator.

## Description (in mm)

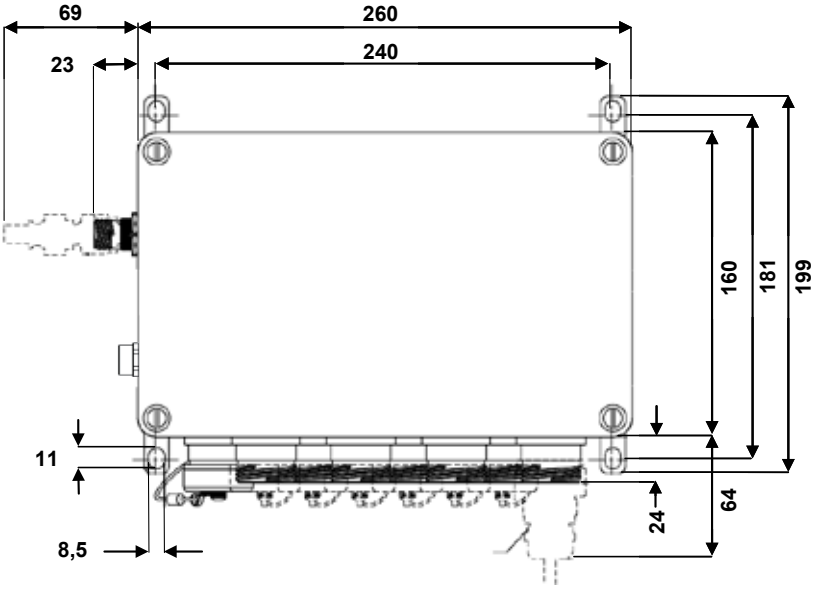


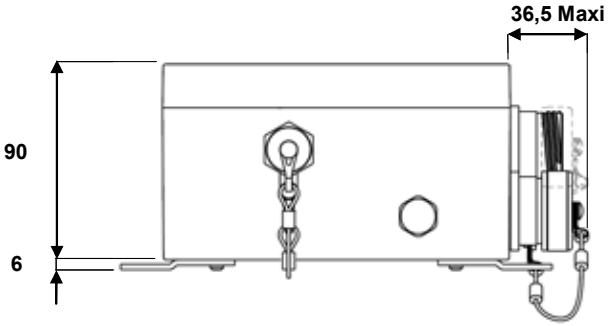


## Pin-out for the power connector

**OK (3&6)**

8US1, 8UG1, & 8UG1-ET
P1 and/or P2: 12-48 VDC

8US1-704 & 8UG1-704
P1: 12-33VDC
3, 4, 5, 6: not connected

8US1-PSM & 8UG1-PSM
L: 85-264 VAC
3, 4, 5, 6: not connected

## Part number code

| Series | RJS | ML | 8US1 | - | - | - |
|---|---|---|---|---|---|---|

**Type of Enclosure**
**ML:** MIL-DTL-38999 (series III) Receptacles, OD Cadmium Plating
**BKN:** RAL 9005 (Jet black) Paint on Aluminium box, Nickel plated 38999 (series III) Receptacles, ROHS compliant

**Type of Electronics**
**8US1:** unmanaged 8 ports 10/100 Base T(X), wide temperature range
**8UG1**: unmanaged 8 ports 10/100/1000 Base T(X)
**8UG1-ET**: unmanaged 8 ports 10/100/1000 Base T(X), wide temperature range

**Optional: transient suppression module; 600V spike suppressor**
**(Blank):** no transient suppression module
**704:** switch equiped with additional transient suppression module

**Optional: AC power supply**
**(Blank):** DC powered
**PSM:** switch powered with 85-264 VAC instead of DC power

**Optional: Caps for receptacles fixed with cord directly to the receptacle**
**(Blank):** no caps included. The Ethernet ports are still sealed but the contacts are not protected.
**CAPS:** attached caps for both power and data included

***Example***: RJS ML 8UG1 704 CAPS: unmanaged switch in an aluminum enclosure with olive drab green conductive cadmium plating, 8 gigabit ports, RJFTV threaded coupling receptacles, additional transient suppression module, caps are added to the switch

**Remark: All BKN Ethernet switches and nickel plated accessories are RoHs compliants.**
**-704- and –PSM- options can not be selected together.**
**With the -704- option, a filter module is included inside the switch allowing to meet MIL-STD-461 and other aircraft standards.**
**With the -CAPS- option, all the receptacles come pre-equipped with a cap.**

## Accessories

Plugs for Ethernet ports
RJF TV 6 M G: cadmium OD plating
RJF TV 6 M N: nickel plating
Based on MIL-DTL-38999
No tool required !!!

Caps for Ethernet ports
RJSML C7G: cadmium OD plating
RJSML C7N: nickel plating
A simple screwdriver is needed!

Plugs for I/O ports:
MIL-DTL-38999,
cadmium plated, crimp contacts
Two plugs (6 cts # 22D)
TV 06 RW 0935 S: cadmium OD plating
TV S06 RF 0935 S: nickel plating

Backshells for I/O plugs
We suggest to use MIL-DTL-38999 III backshells.
Consult the dedicated catalog (E118) for details.
Examples:
TVNSA 09 014 : shielding backshell, cadmium OD plating
TVNSA 09 023: shielding backshell, nickel plating
+ 804221 straight heat shrink for sealing

***Example***: RJS ML 8UG1 704 CAPS with an RJSML 8UG1 704 CAPS switch, we suggest to use hereafter accessories:
RJF TV 6 M G (up to 8) for Ethernet ports
TV 06 RW 0935 S + TVNSA 09 014 + 804221 for power port

# RJSML-MG7F3G

## Managed military Ethernet switch - 7 fast ports + 3 Gigabit ports

### Military ethernet switch for harsh environment with industrial EMI compliancy

### Sealed, rugged & managed switch

Amphenol offers a 10 ports managed Ethernet switch RJSML-MG-7F3G.
Note: this model replaces the RJSML-9MG1 and the RJSML-9RG1.
The switch can withstand a variety of extreme conditions: whatever the situation - high temperatures, extreme shocks and vibrations, dust particles or even liquid immersion there is a solution available.

The switch electronics are sealed within a waterproof IP68 metallic enclosure.
The conductive cadmium plating is suitable for most demanding EMI-RFI environments. Black paint is also offered when RoHs is required (others colors available).
The I/O interface includes redundant power inputs as well as waterproof rugged RJ45 connectors from the RJF TV FIELD threaded product series based on MIL-DTL-38999 (Series III) metallic shell size 19.
This serie enables the transformation without tooling of any standard RJ45 cordset into a robust and waterproof connection system.

### Military applications

- Data acquisition & transmission
- Battlefield communication C4ISR
- Rugged Networks
- Mobile communications
- Test equipment
- Avionic & shipboard systems

### Key features

- **Rugged environmental feature**
  - Rugged metal packaging with cadmium or paint protection
  - Mil-DTL-38999 III connectors for both power and Ethernet ports
  - IP65/IP68 rated when mated
  - Power filtering and protection (-704 option)
    - MIL-STD-461E (CE03) 600V spike suppressior
    - MIL-STD-704A
    - MIL-STD-1275A
    - RTCA/DO-160B
  - MIL-STD-810F shocks
  - RTCA/DO- 160C Vibrations
  - Wide operating temperature range of -40°C to 70°C
  - MIL-STD-810F Altitude 50,000 ft 15,000 m
- **Ethernet features**
  - 3 ports 10/100/1000-BaseT(X) + 7 ports 10/100-BaseT(X)
  - Full-Duplex operation with flow control (no collisions!)
  - Auto-detecting, auto-crossover and auto-polarity
  - MIL-STD-810F shocks
  - RSTP for redundant rings
  - QoS and CoS priority queuing
  - SNMPv3 authentication and encryption
  - IGMP for multicast filtering
  - VLAN for trafic segregation
  - And much more !

## IEEE Ethernet standards

| Models | Features | 802.3/u | 802.3x | 802.3z | 802.1p | 802.1D | 802.1w | 802.1Q |
|---|---|---|---|---|---|---|---|---|
| RJS XX MG 7F3G XX | Managed - Gigabit | ● | ● | ● | ● | ● | ● | ● |

| | | | |
|---|---|---|---|
| IEEE 802.3/u | 10 Mbps & 100 Mbps fast Ethernet | IEEE 802.1p | Priority queuing - QoS, CoS, ToS/DS |
| IEEE 802.3x | Full-Duplex with flow control | IEEE 802.1D/w | Rapid spanning tree for redundant rings |
| IEEE 802.3ab | 1000 Mbps Gigabit Ethernet | IEEE 802.1Q | VLAN for traffic segregation |

## Ethernet features

| | |
|---|---|
| **RJ45 ports** | 10 shields RJ45 ports 10/100 BaseT(X) or 1000 Base T(X) |
| **Connectors for RJ45 ports** | RJFTV: jam nut receptacle based on MIL-DTL-38999 III<br>Olive drab cadmium or Nickel plated |
| **RJ45 speed** | 10 or 100 Mbps auto -negotiation |
| **Typical latency** | 16 us + frame time @ 10 Mbps (varies on load and settings)<br>5 us + frame time @ 100 Mbps |
| **Full / Half Duplex** | Automatic or configurable |
| **RJ45 MDI/MDIX** | Auto-crossover |
| **RJ45 TD and RD polarity** | Auto-polarity |
| **MAC addresses supported** | 8192 |
| **Memory bandwidth** | 32 Gbps (gigabit) ; 3.2 Gbps for all other models |
| **Ethernet isolation** | 1500 Vrms 1 minute |
| **Ring features** | Link loss recovery time: 30 ms plus 5 ms per hop |
| *(for Ring model only)* | Maximum switches in ring: 50+<br>Dual Ring support |

## Environmental specifications

| | |
|---|---|
| **EMI emissions** | EN55022 class A, FCC part 15, IC ES-003 |
| **EMC immunity** | IEC61326-1, IEEE C37.90 |
| **Shocks** | MIL-STD-810F: 40g, 11ms, 18 saw tooth shocks |
| **Vibrations** | RTCA/DO-160C sinusoidal vibrations 5-55 Hz: 0.01 inch ; 55-500 Hz: 1.5 g |
| **Altitude** | MIL-STD-810F: 50.000 ft - 15.000 m |
| **Temperature** | Operating -40°C to +70°C<br>Storage -40°C to +85°C |

## Weight

approx 2.8 kg

## Power supply

| | |
|---|---|
| **Input voltage** | MG7F3G: 10-30 VDC, redundant power input (P1 and P2)<br>MG7F3G-704: 10-30 VDC, single power input (P1 only)<br>MG7F3G-PSM: single power input AC or DC<br>- AC voltage: 85-264 VAC/Frequency 47-63 Hz<br>- DC voltage: 120-370 VDC |
| **Input power** | 5 W typical (all ports active) |
| **Connectors for power** | MIL-DTL-38999 III jam nut receptacle, olive drab cadmium or nickel plated<br>1 connector TVx07xx0935P: 6 cts # 22D (wire 0.4 $mm^2$ maxi) |
| **"OK" contact output** | Sourcing power ; Maximum current : 0.5 A<br>MG7F3G: ON if P1 and P2 have power and switch software is running<br>MG7F3G-704: ON when software is running<br>MG7F3G-PSM: ON when software is running; output power: 24VDC |

| Additional power protection for models MG7F3G-704 (option-704) | |
|---|---|
| MIL-STD-461E | CE102 Conducted emission |
| DEF-STAN-59-41 | DCE01/DCE02 |
| DEF-STAN-61-5 | Pt 6 |
| MIL-STD-704A | 600V input transient, applied for 10us |
| MIL-STD-1275A | Spikes: +/- 250 V for 100us<br>Surges: 100 V for 50 ms at 0.5 mohm<br>Ripple: 14VAC pk-pk |

## Description

1. IP68 aluminium enclosure with cadmium conductive plating or black paint (RoHS)
2. Redundant power inputs
3. Balance pressure vent
4. 10 rugged IP68 RJF TV Ethernet ports
5. Fixture for vertical mounting
6. Optional caps available

**IMPORTANT NOTE**

This model has no LED indicator.
Management is done through a web browser

## Description (in mm)

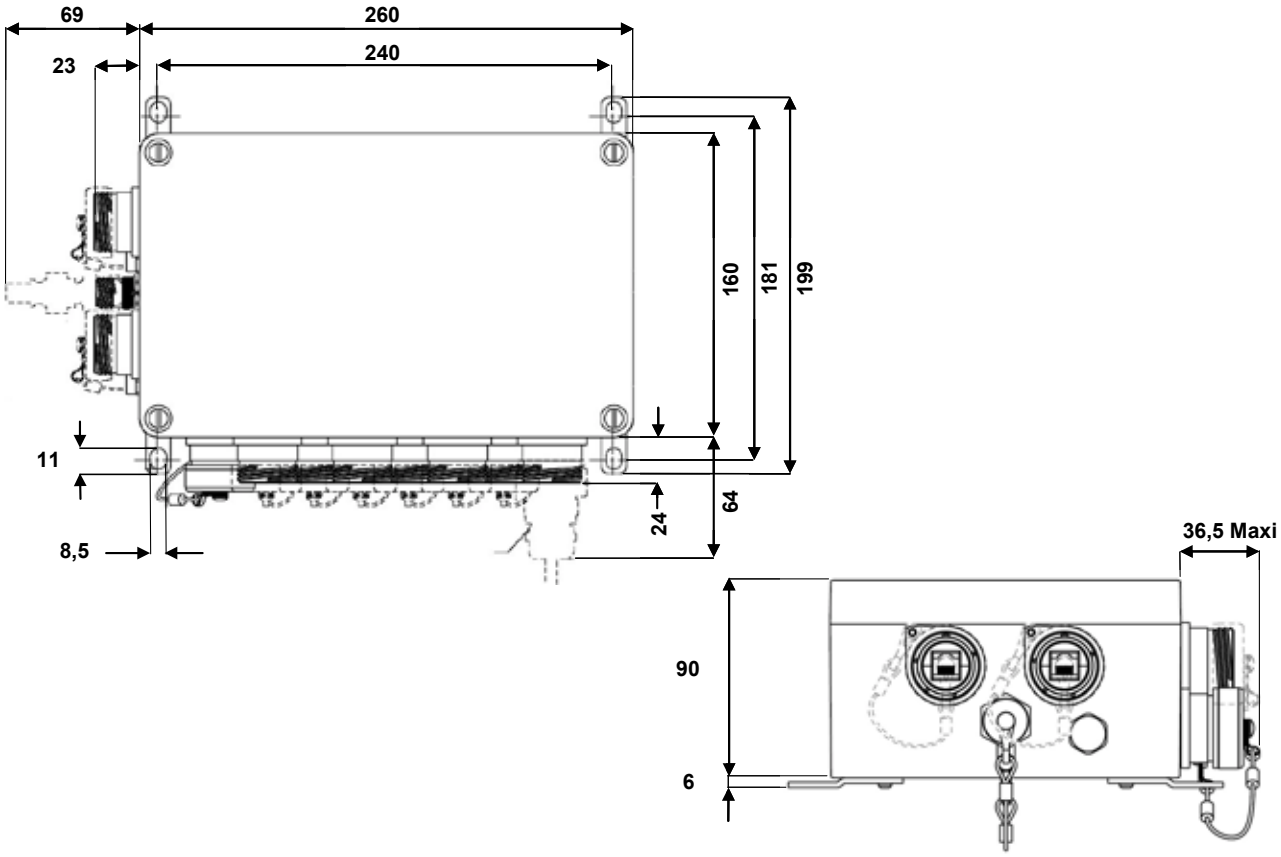


## Pin-out for the power connector

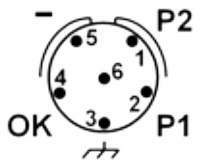


MG7F3G
P1 and/or P2: 10-30 VDC

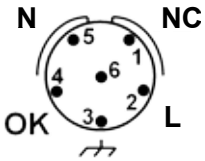


MG7F3G-PSM
L: 85-264 VAC
NC: Not connected

## Part number code

| Series | RJS | ML | MG7F3G | - | - | - |
|---|---|---|---|---|---|---|

**Type of Enclosure**
**ML:** MIL-DTL-38999 (series III) receptacles, OD Cadmium plating
**BKN:** RAL 9005 (jet black) paint on aluminium box, nickel plated 38999 (series III) receptacles, ROHS compliant

**Type of Electronics**
**MG7F3G:** managed 6 ports 10/100 Base T(X) + 3 ports 10/100/1000 Base T(X)

**Optional: transient suppression module; 600V spike suppressor**
**(Blank):** no transient suppression module
**704:** switch equiped with additional transient suppression module

**Optional: AC power supply**
**(Blank):** DC powered
**PSM:** switch powered with 85-264 VAC instead of DC power

**Optional: Caps for receptacles fixed with cord directly to the receptacle**
**(Blank):** no caps included. The Ethernet ports are still sealed but the contacts are not protected.
**CAPS:** attached caps for both power and data included

***Example:*** RJS ML MG7F3G 704 CAPS — Managed switch in an aluminium enclosure with olive drab green conductive cadmium plating, 7 ports 10/100 Base T(X) + 3 gigabit ports, RJF TV threaded coupling receptacles, additional transient suppression module, caps are added to the switch.

***Remark*:** **All BKN Ethernet switches and nickel plated accessories are RoHs compliants.**
**704 and PSM options can not be selected together.**
**With the -704 option, a filter module is included inside the switch allowing to meet MIL-STD-461 and other aircraft stan dards.**
**With the –CAPS option, all the receptacles comes pre-equipped with a cap.**

## Accessories

Plugs for Ethernet ports
RJF TV 6 M G: cadmium OD plating
RJF TV 6 M N: nickel plating
Based on MIL-DTL-38999
No tool required !!!

Caps for Ethernet ports
RJSML C7G: cadmium OD plating
RJSML C7N: Nickel plating
A simple screwdriver is needed!

Plugs for I/O ports:
MIL-DTL-38999,
cadmium plated, crimp contacts
Two plugs (6 cts # 22D)
TV 06 RW 0935 S: cadmium OD plating
TV S06 RF 0935 S: nickel plating

Backshells for I/O plugs
We suggest to use MIL-DTL-38999 III backshells.
Consult the dedicated catalog (E118) for details.
Examples:
TVNSA 09 014 : shielding backshell, cadmium OD plating
TVNSA 09 023: shielding backshell, nickel plating + 804221 straight heat shrink for sealing

***Example :*** RJS ML MG7F3G 704 CAPS — With a RJSML MG7F3G 704 CAPS switch, we suggest to use hereafter accessories :
RJF TV 6 M G (up to 10 ) for Ethernet ports
TV 06 RW 0935S + TVNSA 09 014 + 804221 for power ports

# RJSPC

## Unmanaged or ring industrial Ethernet switch - 5 fast ports

### Industrial ethernet switch for harsh environment

### Rugged & waterproof switch

Amphenol offers a small size 5 ports waterproof Ethernet switch that can withstand a variety of extreme conditions - low & high temperatures, shocks & vibrations, dust particles or even liquid immersion.
This is an easy way to make the Ethernet networks of your manufacturing site, automation or control units deterministic.

### Amphenol IP68 industrial ring switch

Amphenol IP68 ring Ethernet switch is a combination of very fast, fault-tolerant network redundancy Sixnet technology and IP68 sealed & rugged packaging, specifically designed for the harshest environments.
Rings self-configure and just run, without any complex configuration.
The switch board is sealed within a waterproof IP68 polyester enclosure suitable for highly corrosive environments.
The polyester material is glass fiber reinforced. This makes it very rugged against shocks and vibration.
The I/O interfaces are waterproof & rugged RJ45 connectors from the RJ FIELD plastic circular series.

### Industrial applications

- Factory automation
- Robotics
- Process control
- Transportation systems
- Data acquisition & transmission

### Key features

- Ring switch networking features (managed features available!)
  - Real-Time ring for ultra-fast fault-tolerant loops
    - recovery time of 30 ms + 5 ms per hop!
  - Modbus monitoring over Ethernet
    - ideal for deterministic systems and PLCs
  - Real-time traffic prioritization (QoS and CoS)
    - assure delivery of real-time data
    - improve network utilization
    - user settable priority assignments
  - Advanced switch features
    - user configurable port settings
    - port mirroring for traffic diagnostics
    - pre-configurable for Plug-And-Play simplicity

**Note:** for ATEX version, see page 138.

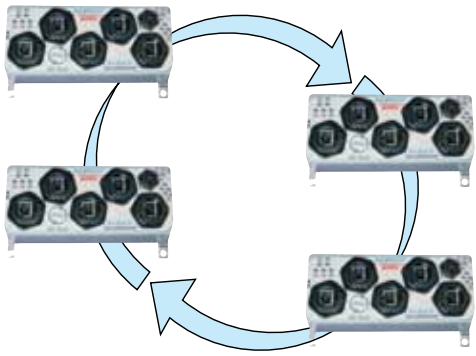

1. LEDs indicating activity, link status, datarate (10/100 Mbps)
2. LED indicating ring status
3. 5 rugged IP68 RJ Field Ethernet ports
4. Real-time ring feature
5. IP68 polyester enclosure reinforced with glass fiber
6. OK power & ring status
7. LEDs indicating power
8. Redundant power inputs
9. OK contact output

## IP68 UNMANAGED & RING SWITCH FEATURES

### IEEE Ethernet standards

| | |
|---|---|
| **IEEE 802.3** | 10 Mbps Ethernet |
| **IEEE 802.3u** | 100 Mbps Fast Ethernet |
| **IEEE 802.3x** | Full-Duplex with Flow Control |
| **IEEE 802.1p standard** | QoS/CoS - Quality/Class of service for ring model only |

### Regulatory approvals

| | |
|---|---|
| **EMI emissions** | EN55022, FCC part 15, ICES-003 |
| **EMC immunity** | IEC61326-1, IEEE C37.90 |
| **Shocks** | IEC60068-2-27 |
| **Vibrations** | IEC60068-2-6 |
| **Free Fall** | IEC60068-2-32 |

### Ethernet features

| | |
|---|---|
| **Ports** | 5 shielded RJ45 ports 10/100BaseTX |
| **Ethernet switch type** | Intelligent store & forward |
| **Full / Half Duplex** | Configurable |
| **RJ45 speed** | 10 or 100 Mbps auto-negotiation |
| **RJ45 MDI/MDIX** | Auto-crossover connection |
| **RJ45 TD and RD polarity** | Auto-polarity |
| **Typical latency** | 16 us + frame time @ 10 Mbps (varies on load and settings)<br>5 us + frame time @ 100 Mbps |
| **MAC addresses supported** | 2048 |
| **Memory bandwidth** | 3.2 Gbps |
| **Ethernet isolation** | 1500 Vrms 1 minute |
| **Ring features** | Link loss recovery time: 30 ms plus 5 ms per hop |
| *(for Ring model only)* | Maximum switches in ring: 50+<br>Dual ring support |

### Power supply

| | |
|---|---|
| **Input power (typical)** | ES: 2,4 W ; RS: 2,7 W |
| **Redundant inputs** | 10-30 VDC; 10-50 VDC for EP models |

### Status reporting (for ring model only)

| | |
|---|---|
| **"OK" contact output** | Output current: 0.5 A max |
| **"OK" contact State** | OFF when a fail occurs<br>ON when power and switching is OK |

### Environmental

| | |
|---|---|
| **Operating temperature** | - 40°C to +75°C |
| **Storage temperature** | - 40°C to +85°C |

| | |
|---|---|
| **Weight** | 0.54 kg |

## Real-Time ring switches

Amphenol Real-Time ring switches combines the Plug&Play simplicity of an unmanaged switch with high performances of Sixnet Ring managed switches.

- Real-Time fault-tolerant Ring
  Recovery time of 30 ms + 5 ms per hop!
- Real-Time traffic prioritization (QoS & CoS)
  Assure delivery of real-time data
- Available Managed features
  User configurable port settings
  Port mirroring for traffic diagnostics
  Pre-configurable for Plug & Play simplicity

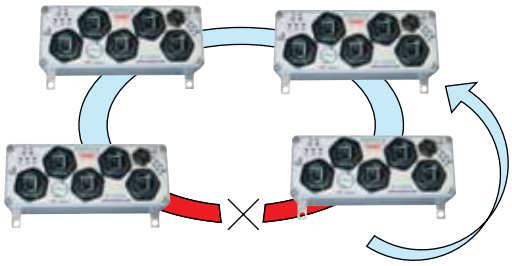

The use of such switches provides a fast network and avoids faults. When a break occurs, the switch instantly transfers data to new path. The link loss recovery is 30 ms plus 5 ms times the number of Ring switches in the ring. For example, 10 ring switches will recover in less than 80 ms. Rings can be pre-configured to "just run". They don't need an assigned IP address. But if you like, you can fine tune the performance of the ring by using a simple Windows wizard (which is free).
Ring networks can be divided into multiple "sub-rings" which enhance reliability and recovery speed through small ring paths.

The prioritization of messages assures delivery of real-time data. Some applications need to force no-real-time data (such as video information) to lower priority and force critical real-time data at higher priority. Network utilization is improved.

**This combination of Ethernet technology associated with rugged and sealed protective enclosure is the ideal solution to deliver deterministic performance to your industrial systems even in the harshest environment!**

### Dimensions (mm/inch)

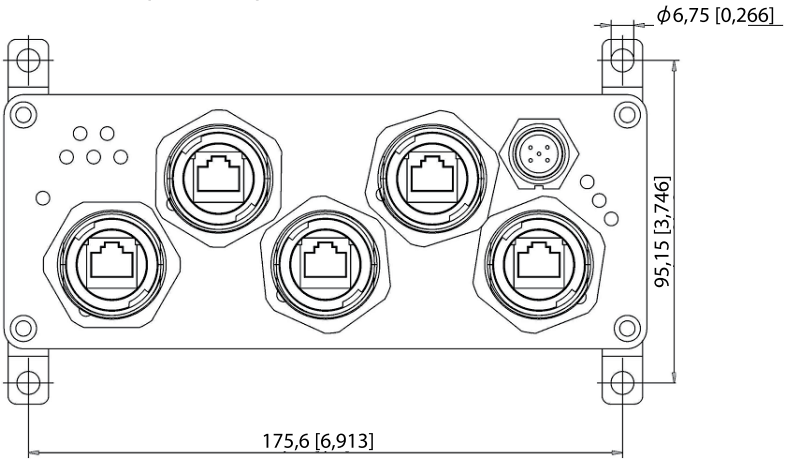


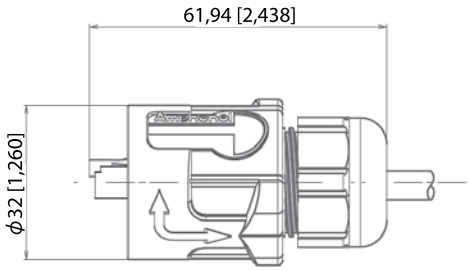


Accessory: Plugs for RJ45 ports

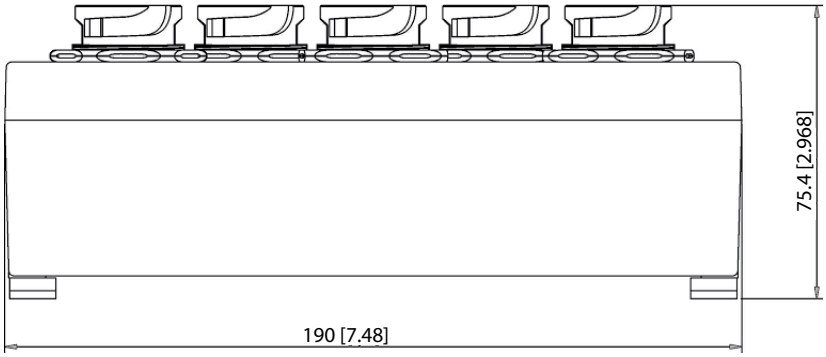


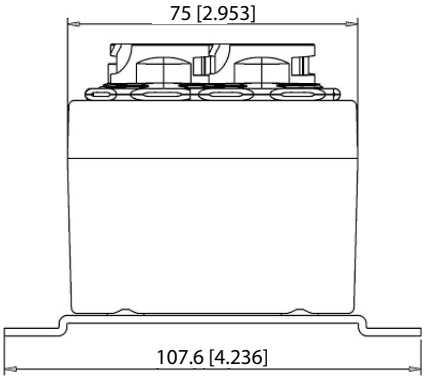

## Part number code

| | | | |
|---|---|---|---|
| **Series**<br>IP68 RJ-Switch, with polyester body | **RJS-PC** | **5ES** | **1** |
| **Type of electronics**<br>**5RS**: 5 ports 10/100 Mbps, Ring switch<br>**5ES**: 5 ports 10/100 Mbps, Unmanaged switch | | | |
| **Connectors**<br>**1**: RJ45 ports, 10/100BaseT(X)<br>**1CAPS**: caps are attached on both power and data receptacles | | | |
| **Military rated protection**<br>Blank: Industrial protection (standard order)<br>**EP**: extended power protection exceeds MIL-STD-1275 (special order) | | | |

*Example:* IP68 Ethernet ring switch, 5 ports 10/ 100 Mbps, with caps attached on the receptacles: RJS-PC-5RS-1CAPS

***Note***: the Ring model is pre-set for 1 ring enabled on the ports 4 and 5. You may change the configuration by using the free windows configuration tool. Simply choose the desired pair of ports for your new enabled ring.

**FREE WINDOWS** CONFIGURATION TOOL
Download it at **www.rjswitch.com**

## Accessories

■ P/N: **RJF PC5 PWR**
Plug for power port
Sealing protection: IP68

■ P/N: **RJF RB 6**
Plug for RJ45 ports
Sealing protection: IP68

# Rugged USB Solutions

# NEW USB3.0 & USB2.0

## Field installable

## Table of contents


NEW **USB3.0**

USB3FTV (USB-A) ..... 86
USB3F TV - Transversally sealed receptacles ..... 90
USB3F TV - Hermetic receptacles ..... 93
USB3 receptacle with Self Closing Cap ..... 94
Metallic Self Closing Cap (SCC) for USB3F TV square flange receptacles ..... 95
High reliability USB 3.0 cordsets ..... 96

**USB2.0**

USBFTV (USB-A) ..... 97
USBF TV - Transversally sealed receptacles ..... 100
USBF TV Hermetic receptacles ..... 102
USBFTV - Receptacles with 360° EMI backshells ..... 103
USBF TV Through bulkhead ..... 104
USBF TV Stand off receptacles ..... 105
USBF TV 2.0 receptacle with Self Closing Cap (SCC) ..... 107
Metallic Self Closing Cap (SCC) for USBF TV square flange receptacles ..... 108
High reliability USB 2.0 cordsets ..... 109
USBF SC - Quick release series ..... 110
USBBF TV (USB-B) ..... 112
USBBF TV Stand off receptacles ..... 115
USBBF TV - Transversally sealed receptacles ..... 117
USBB receptacle with Self Closing Cap ..... 118
Metallic Self Closing Cap (SCC) for USBB square flange receptacles ..... 119
Special USB adaptor for Military & Commercial Aeronautics ..... 120

# USB3F TV *(USB-A)*

**USB connection system for harsh environment**

NEW USB3.0

ROHS COMPLIANT N & BZ

With USB Field, you can insert a standard USB 3.0 cordset into a metallic plug which will protect it from shocks, dust and fluids.
**No hazardous on-field cabling and grounding!**
**Also available a version including plug + cordset: see next page.**

This metallic plug is connected into a receptacle, using a Tri Start Thread coupling mechanism (MIL-DTL-38999 series III type) with anti-decoupling device for high vibrations.

## Applications

- Embedded computers
- Data acquisition and transmission in harsh environment
- Railways
- Battelfield communication systems
- Navy systems

## Data transmission

USB specification 3.0
Data rate: up to 5Gb/s for high speed USB

Dataspeed 10 x higher than USB2.0

## Main characteristics

- Sealed against fluids and dusts (IP68)
- Shock, vibration and traction resistant
- No cabling operation in field and no tools required
- Improved EMI protection
- Tri Start Thread coupling mechanism (MIL-DTL-38999 series III type) with anti-decoupling device - Shell size 15
- 2 mechanical coding / polarization possibilities (receptacle insert rotation)
- USB3F TV plug retention in the receptacle: 100 N in the axis
- Mating cycles: 500 minimum

## Environmental protection

- Sealing (when mated): IP68 (temporary immersion)
- Salt spray: 48 h with nickel plating
  > 500 h with olive drab cadmium
  500 h with marine bronze shell
- Fire retardant / low smoke: UL94 V0 and NF F 16 101 & 16 102
- Vibrations: 10 – 500 Hz, 10 g, 3 axes: no discontinuity > 1micro s
- Shocks: IK06: weight of 250 g drop from 40 cm [15.75 in] onto connectors (mated pair)
- Humidity: 21 days, 43°C, 98% humidity
- Temperature range: - 40°C / +85°C

## Part number code: plug and receptacles without cordset.

| Series USB3 Field TV | USB3F TV | 2 | A | G |
|---|---|---|---|---|
| **Shell type**<br>**6:** plug (without cordset) - *For cordset solution, see page 88.*<br>**2:** square flange receptacle with female USB3.0 termination - *For cordset solution, see page 90.*<br>**7:** jam nut receptacle with female USB3.0 termination - *For cordset solution, see page 90.* | | | | |
| **Coding (for receptacle only)**<br>**A** or **B** | | | | |
| **Shells material & finish**<br>**G:** aluminium shell - olive drab cadmium plating<br>**N:** aluminium shell - nickel plating - *ROHS compliant* | | | | |

*Examples:* - *plug, olive drab cadmium plating:* ***USB3F TV 6 G***
- *jam nut receptacle, coding B, nickel plating:* ***USB3F TV 7 B N***

## Plug without cordset

- Shell type 6

Part number type: **USB3 FTV 6 x**
***Nota**: assembling instructions on page 89*

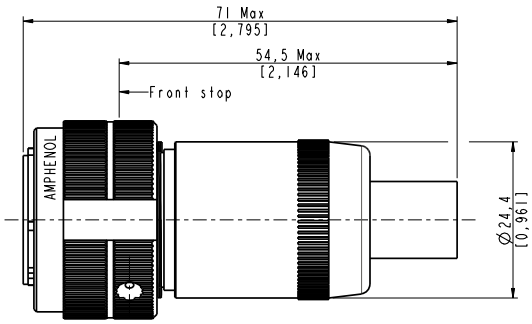

## Receptacles

■ Square flange receptacle
4 mounting holes - Shell type 2
Part number type: **USB3 FTV 2 x**

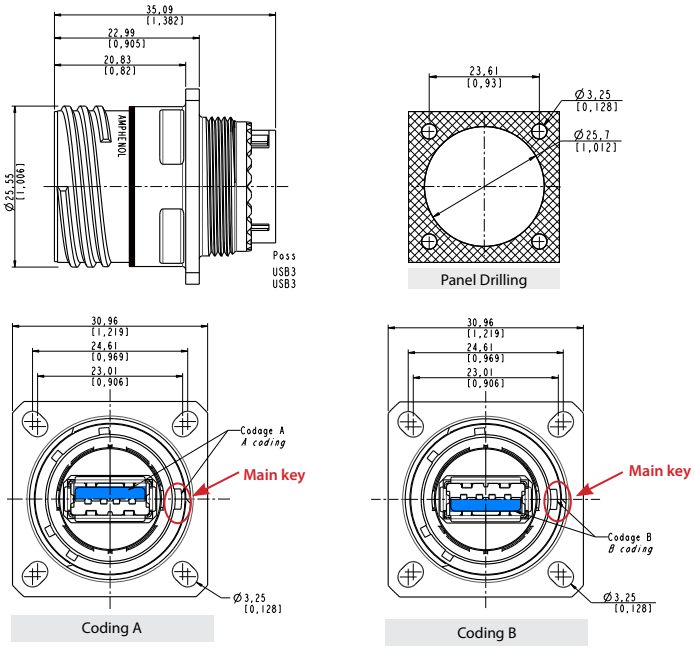


■ Jam nut receptacle
Hexagonal nut mounting - Shell type 7
Part number type: **USB3 FTV 7 x**

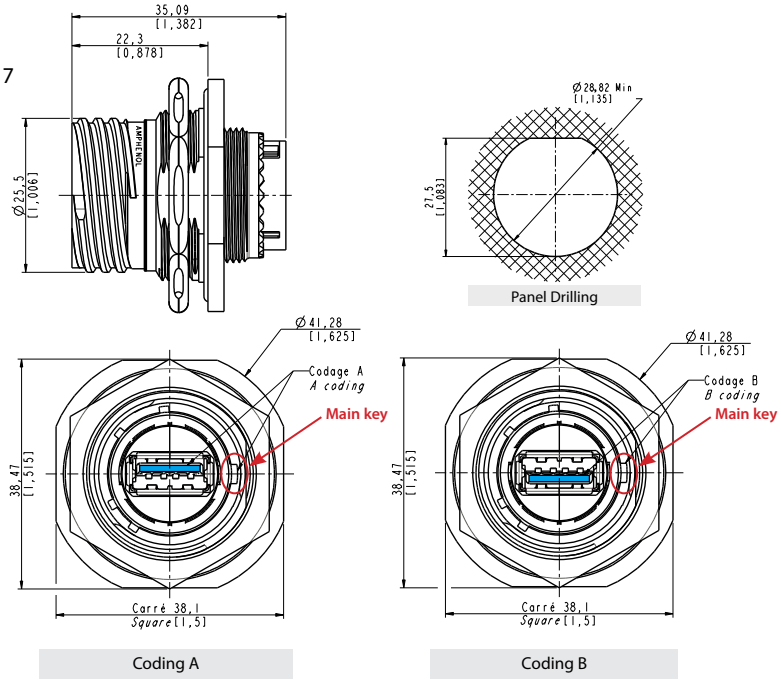


### Configuration use

For PC to peripheral application, use a crossed USB3 cable
« **CROS** » type in the part number code

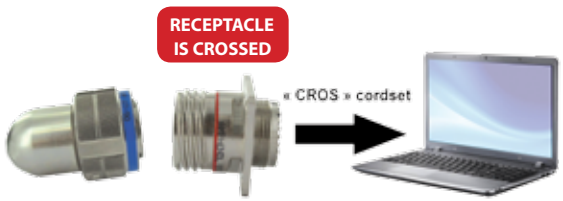


For PC to PC application, use a straight USB3 cable
« **STR** » type in the part number code

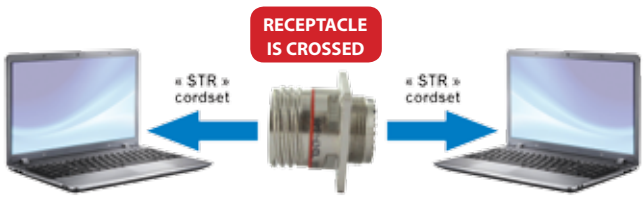

## Part number code: plugs with cordset.

| Series USB3 Field TV | USB3F TV | 6 | A | 03 | G | STR |
|---|---|---|---|---|---|---|
| **Shell type**<br>**6:** plug (with cordset) | | | | | | |
| **Coding**<br>**A** or **B** | | | | | | |
| **Cordset length**<br>**03:** 0.3 m [11.81 inches] **10:** 1 m [39.37 inches]<br>**05:** 0.5 m [19.68 inches] **15:** 1.5 m [59.05 inches] | | | | | | |
| **Shells material & finish**<br>**G:** aluminium shell - olive drab cadmium plating<br>**N:** aluminium shell - nickel plating - *ROHS compliant* | | | | | | |
| **Type of cable** *<br>**CROS:** high reliability USB3 cable crossed<br>**STR:** high reliability USB3 cable straight<br>**OPEN:** high reliabilty USB3 cable open ⇨ *no plug at the end'* | | | | | | |

*** IMPORTANT NOTE**
- for PC to PC application, use a "**CROS**" type of cable
- for PC to peripheral application, use a "**STR**" type of cable

*See **Configuration use** on page 87*

*Examples:* *- plug, coding B, with 0.5m length of high reliability USB3 cable crossed, nickel plating:* ***USB3F TV 6 B 05 N CROS***
*- plug, coding A, with 1m length of high reliability USB3 cable straight, olive drab plating:* ***USB3F TV 6 A 10 G STR***
*- plug, coding B, with 0.3m length of high reliability USB3 OPEN, nickel plating:* ***USB3F TV 6 B 03 N OPEN***

## Plug with reinforced USB3.0 cordset

■ Shell type 6

Part number type: **USB3 FTV 6 x xx x CROS**
**USB3 FTV 6 x xx x STR**

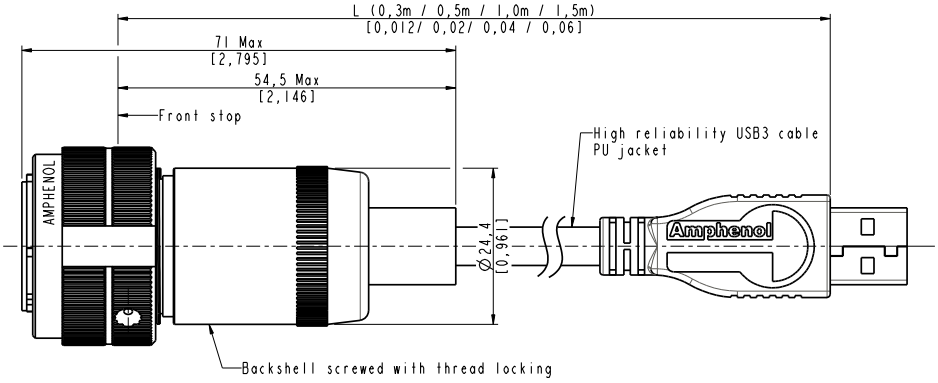


## Plug with open reinforced USB3.0 cable

■ Shell type 6

Part number type: **USB3 FTV 6 x xx x OPEN**

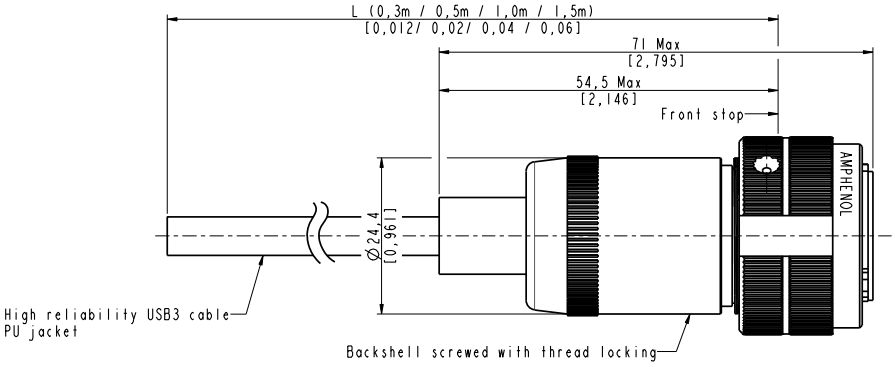


## 2 codings available for plugs

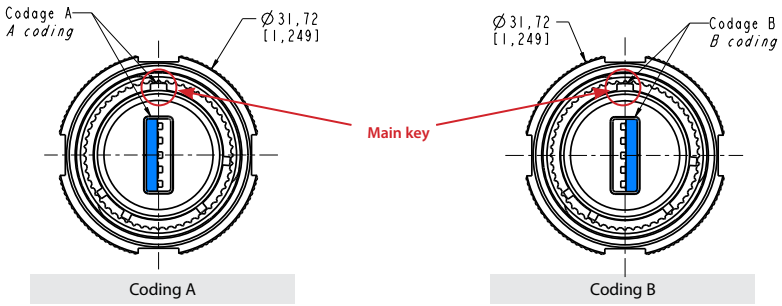


Amphenol

## Assembly instructions

*Can be used with most the USB3.0 cordset brands : No tools required!*

### Plug assembly

1. Insert the USB3 cordset into the metallic backshell
2. Insert the retention spacer laterally to the cable (this spacer is soft, in order to adapt to different shapes of overmolding) and slide the overmolding of the USB3-A plug into this retention spacer
3. Insert the friction ring laterally to the cable
4. Choose the right coding (2 positions) and insert the USB-A plug into the protective plug.Note at this step, the main key is used for polarization through the blue seal.

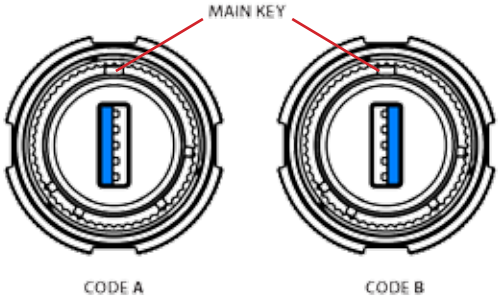


7. Screw the backshell on the plug body. A wrench can be necessary to fully tighten it, and the connection to the receptacle can help

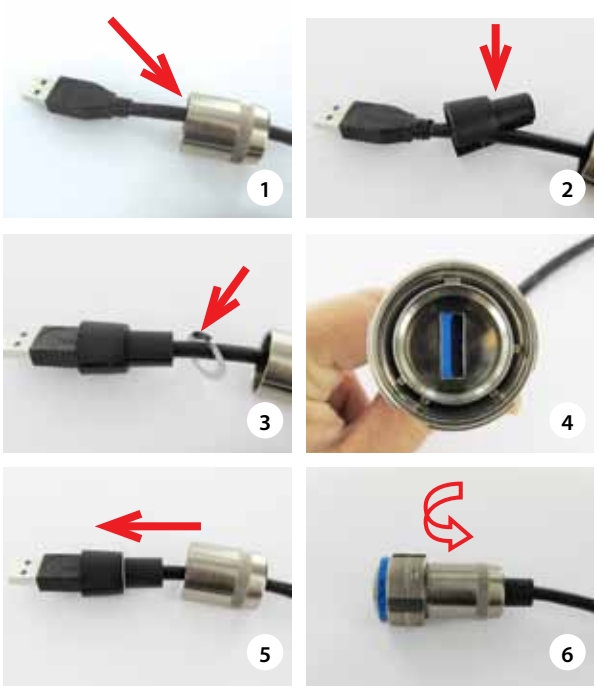


**IMPORTANT NOTE**
The sealing is done by the blue seal.

**USB3 cordset usable** - *Not provided*

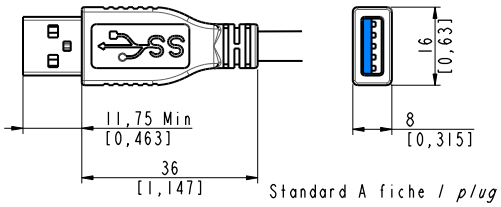


## Accessories

■ **Metallic caps**

| | USBF TVC | 2 | G |
|---|---|---|---|
| **Connector type**<br>**6:** plug<br>**2:** square flange receptacle<br>**7:** jam nut eceptacle | | | |
| **Shells material & finish**<br>**N:** aluminium shell - nickel - *ROHS compliant*<br>**G:** aluminium shell - olive drab cadmium<br>**BZ:** marine bronze shell - *ROHS compliant* | | | |

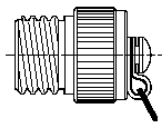

Plug Cap

Receptacle Cap

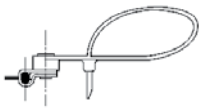

Plug Cap end

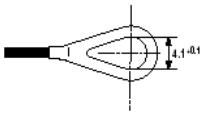

Square flange receptacle cap end

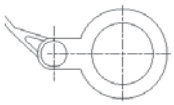

Jam Nut receptacle cap end

■ Panel gasket for square flange receptacle
Thickness: 0,8 mm [.031]
P/n: **JE15**

# USB3F TV *(USB-A)*

## Transversally sealed receptacles

NEW USB3.0

ROHS COMPLIANT N & BZ

In some applications, a transversal sealing for the receptacle is a « must ». This will prevent fluids and dust from going through the receptacle when plug or cap are not mated to the receptacle. The sealed solution (version "S") has a compound at the rear of the receptacle below. In addition, the Sealed USB3F TV has been successfully tested in very high vibration corresponding to airplane applications.

### Main characteristics

- Sealed against fluids and dusts (IP68)
- Shock, vibration and traction resistant
- No cabling operation in field and no tools required
- Improved EMI protection
- Tri Start Thread coupling mechanism (MIL-DTL-38999 series III type) with anti-decoupling device - Shell size 15
- 2 mechanical coding/polarization possibilities by the user (receptacle insert rotation)
- USB3F TV plug retention in the receptacle: 100 N in the axis
- Mating cycles: 500 minimum

### Environmental protection

- Sealing (when mated): IP68 (temporary immersion)
- Salt spray: 48 h with nickel plating
  > 500 h with olive drab cadmium
  500 h with marine bronze shell
- Fire retardant / Low smoke: UL94 V0 and NF F 16 101 & 16 102
- Vibrations: 10 – 500 Hz, 10 g, 3 axes: no discontinuity > 1micro s
- Shocks: IK06 ▸ weight of 250 g drop from 40 cm [15.75 in] onto connectors (mated pair)
- Humidity: 21 days, 43°C, 98% humidity
- Temperature range: - 40°C / +85°C

### Applications

- Embedded computers
- Data acquisition and transmission in harsh environment
- Railways
- Battelfield communication systems
- Navy systems

### Data transmission

USB specification 3.0
Data rate: up to 5Gb/s for high speed USB

## Part number code

| Series USB3 Field TV | USB3F TV | 2 S | A | 03 | G | STR |
|---|---|---|---|---|---|---|
| **Shell type**<br>**2S:** square flange receptacle<br>**7S:** jam nut receptacle | | | | | | |
| **Coding**<br>**A** or **B** | | | | | | |
| **USB cable length**<br>**03:** 0.3 m [11.81 inches]<br>**05:** 0.5 m [19.68 inches]<br>**10:** 1 m [39.37 inches]<br>**15:** 1.5 m [59.05 inches] | | | | | | |
| **Shells material & finish**<br>**G:** aluminium shell - olive drab cadmium plating<br>**N:** aluminium shell - nickel plating - *ROHS compliant* | | | | | | |
| **Type of cable** *<br>**ACROS:** high reliability crossed USB3 cable with plug at the end<br>**ASTR:** high reliability straight USB3 cable with plug at the end<br>**OPEN:** high reliability cable open = no plug at the end | | | | | | |

*** IMPORTANT NOTE**
- for PC to PC application, use a "**CROS**" type of cable
- for PC to peripheral application, use a "**STR**" type of cable

*See **Configuration use** on page 87*

*Examples:*
- *square flange receptacle, with 0.5m length of high reliability USB3 cable crossed, coding B, nickel plating:* ***USB3F TV 2 S B 05 N CROS***
- *jam nut receptacle, with 1m length of high reliability USB3 cable straight, coding A, olive drab cadmium plating:* ***USB3F TV 7 S A 10 G STR***
- *jam nut receptacle, with 0.3m length of high reliability USB3 cable open, coding B, olive drab cadmium plating:* ***USB3F TV 7 S B 03 G OPEN***

## Receptacles with USB-A cordset

■ Square flange receptacle

4 mounting holes: shell type 2

Part number: **USB3 FTV 2 S x xx x CROS**

**USB3 FTV 2 S x xx x STR**

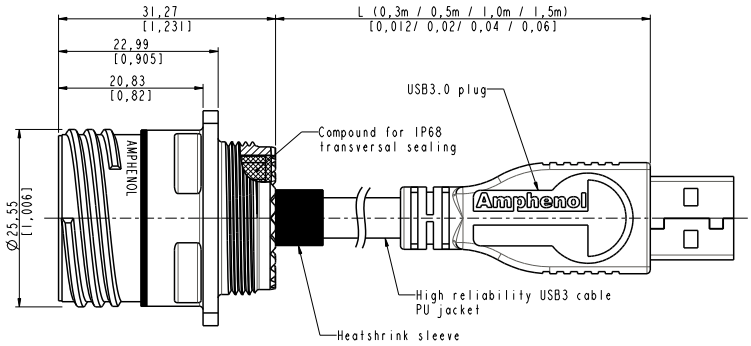


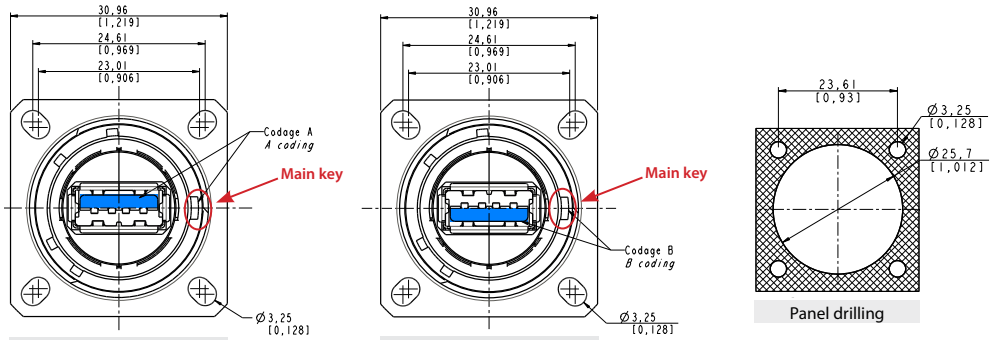


Coding A

Coding B

Panel drilling

■ Jam nut receptacle hexagonal nut mounting: shell type 7

Part number: **USB3 FTV 7 S x xx x CROS**

**USB3 FTV 7 S x xx x STR**

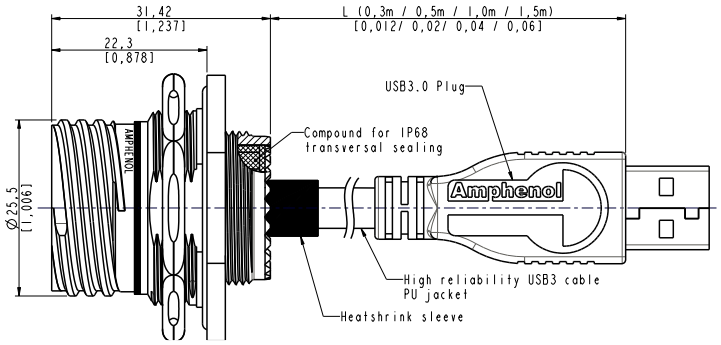


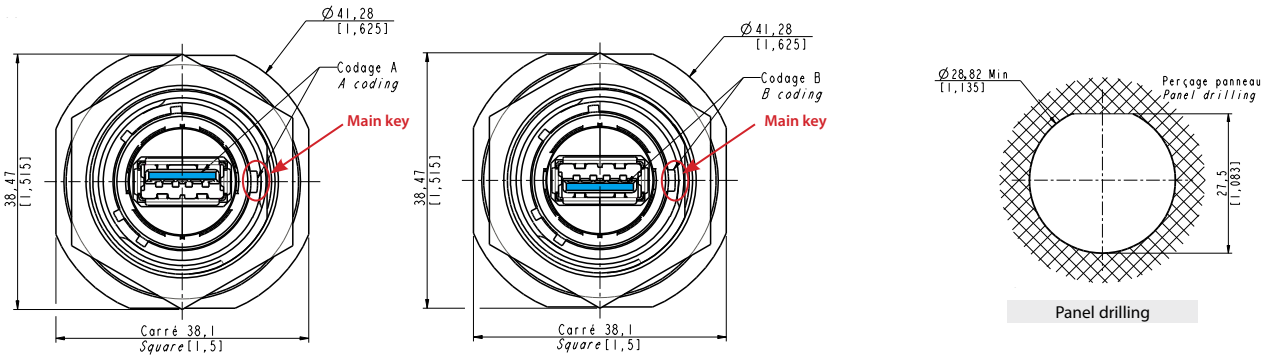


Coding A

Coding B

Panel drilling

## Receptacles with open reinforced USB3.0 cable

■ Square flange receptacle - 4 mounting holes: shell type 2

Part number type: **USB3F TV 2 S A xx x OPEN**

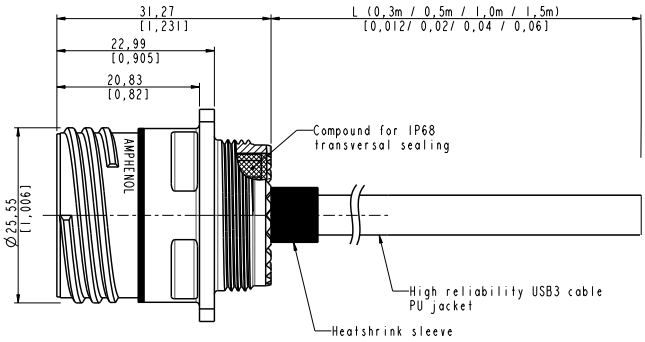


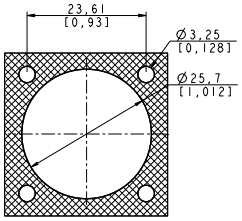


Panel drilling

■ Jam nut receptacle hexagonal nut mounting: shell type 7

Part number type: **USB3F TV 7 S A xx x OPEN**

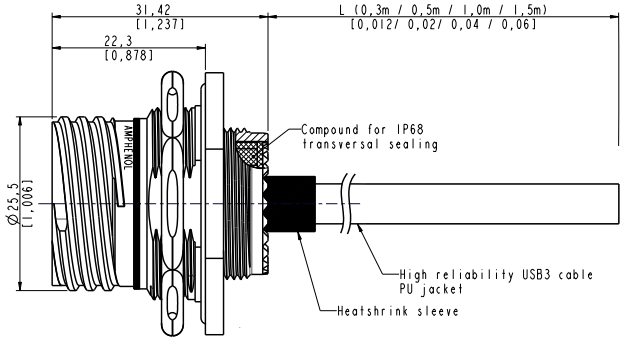


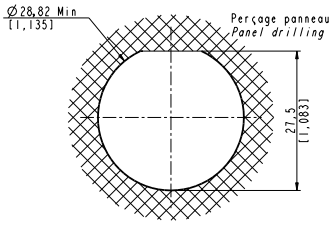


Panel drilling

Amphenol

# USB3F TV

## Hermetic receptacles

NEW

ROHS COMPLIANT N & BZ

In some applications, a transversal hermiticity for the receptacle is a « must ». This will prevent gas from going through the receptacle when plug or cap are not mated to the receptacle.
The hermetic solution (version "H") has a compound at the rear of the receptacle. Helium leakage is less than $1.10^{-6}$ $cm^3$ per second [0.1 micron cubit ft per hour] at one bar [15 psi] pressure differential.

### Applications

- Embedded computers
- Data acquisition and transmission in harsh environment
- Railways
- Battelfield communication systems
- Navy systems

### Data transmission

USB specification 3.0
Data rate: up to 5Gb/s for high speed USB

### Main characteristics

- Same as the USB3F TV (see page 76)... a complete IP68 sealing of the receptacle is added (even with no plug or no protective cap mated).
- Outside dimensions are the same as the standard USB3F TV (USB-A).
- Vibrations : the compounded version of the USBF TV has been tested in vibration following the NAS 1599 aeronautic specification (ambient temperature):
5 - 3000 Hz, 20g, 2.5 mm [.1 inch] double amplitude, 3 axes, 12 hours
Note: this specification exceeds MIL-C-26500 requirements.

### IMPORTANT NOTE

Due to the compound, the coding of the connector must be done in the factory: use the codes A or B in the part number.
***Example***: USBF3TV 2H **A** 2 N 03 A

Coding A

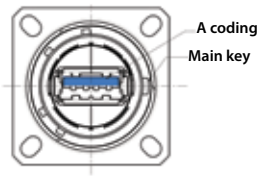


Coding B

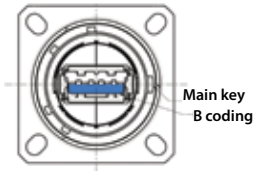


*Same for jam nut receptacle.*

### Part number code

| Series USB3 Field TV | USB3F TV | 2 H | A | 03 | G | STR |
|---|---|---|---|---|---|---|
| **Shell type**<br>**2H:** square flange receptacle<br>**7H:** jam nut receptacle | | | | | | |
| **Coding**<br>**A** or **B** | | | | | | |
| **USB cable length**<br>**03:** 0.3 m [11.81 inches]<br>**05:** 0.5 m [19.68 inches]<br>**10:** 1 m [39.37 inches]<br>**15:** 1.5 m [59.05 inches] | | | | | | |
| **Shells material & finish**<br>**G:** aluminium shell - olive drab cadmium plating<br>**N:** aluminium shell - nickel plating - *ROHS compliant* | | | | | | |
| **Type of cable** *<br>**ACROS:** high reliability crossed USB3 cable with plug at the end<br>**ASTR:** high reliability straight USB3 cable with plug at the end<br>**OPEN:** high reliability cable open = no plug at the end | | | | | | |

*** IMPORTANT NOTE**
- for PC to PC application, use a "**CROS**" type of cable
- for PC to peripheral application, use a "**STR**" type of cable

*See **Configuration use** on page 87*

*Examples:*
*- square flange receptacle, with 0.5m length of high reliability USB3 cable crossed, coding B, nickel plating:* ***USB3F TV 2 H B 05 N CROS***
*- jam nut receptacle, with 1m length of high reliability USB3 cable straight, coding A, ODC plating:* ***USB3F TV 7 H A 10 G STR***
*- jam nut receptacle, with 0.3m length of high reliability USB3 cable open, coding B, ODC plating:* ***USB3F TV 7 H B 03 G OPEN***

Amphenol

# USB3 Receptacle with Self Closing Cap

NEW

ROHS COMPLIANT N & B

This Self Closing Cap automatically protects the USB3 square flange receptacles (MIL-C-26482 type), protecting your system from dust and water projections.
The same cap can be used to protect RJ45, USB2.0, USB-B and IEEE1394 receptacles. A spring automatically closes the upper part of the cap when either the RJ Field plug, RJ45 cordset, USB or IEEE1394 cordset, or USB key are removed from the receptacle.

## USB3F 21 X SCC

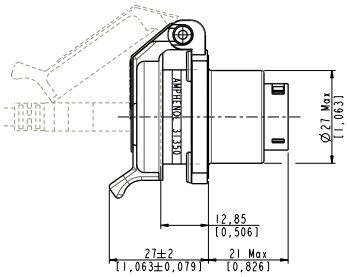


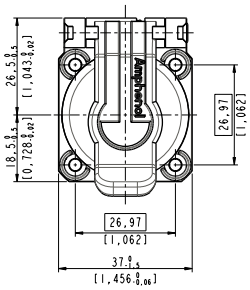


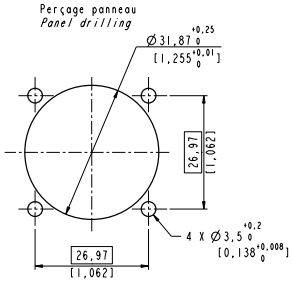


**Version: USB-A** *(front and back termination)*

| | | Plating | Metallized inserts (EMI) |
|---|---|---|---|
| **Part number** * | **USB3F 2B SCC** | Black coated | No |
| | **USB3F 2N SCC** | Nickel plated | Yes |
| | **USB3F 2G SCC** | Olive drab cadmium plated | Yes |

* The part number includes the receptacle + the self closing cap

■ **Note**: Panel gasket with any of these receptacles: **JE18**

## RJF 21 X SCC, USBF 21 X SCC, USBBF 21 X SCC, & IEEE1394

RJ45 version

*(see page 25)*

USB2.0-A version

*(see page 107)*

USB-B version

*(see page 118)*

IEEE1394 version

*(see page 143)*

# Metallic Self Closing Cap (SCC)

**For USB3F TV square flange receptacles.**

This Self Closing cap automatically protects the USB3F TV (type A) square flange receptacles (MIL-DTL-38999 type), protecting your system from dust and water projection.
A spring automatically closes the upper part of the cap when the USB plug is removed from the receptacle.

**Sealing level IP67**

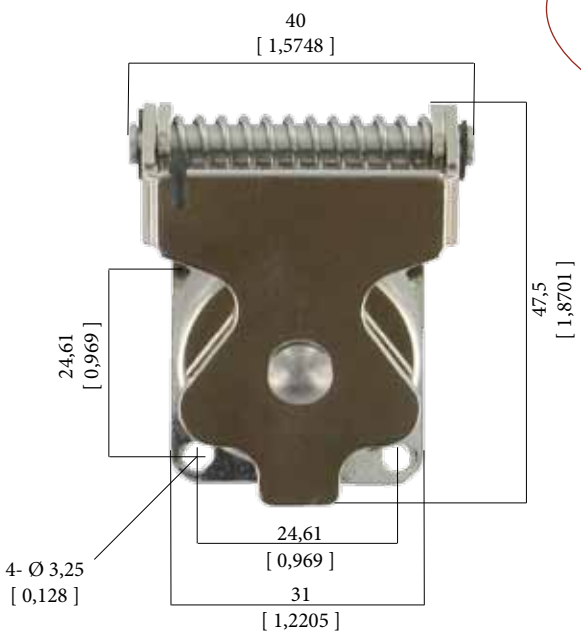


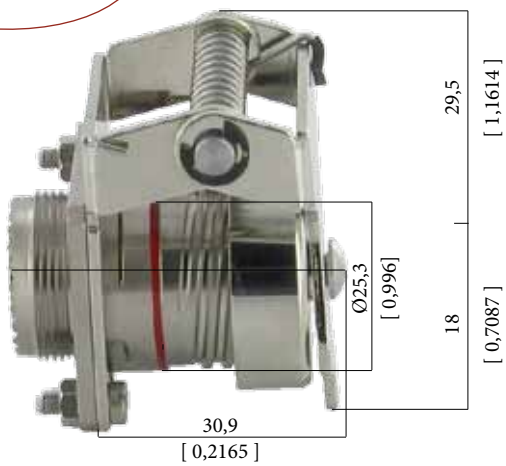


**IMPORTANT NOTE**
Metal Self Closing caps are sold separately (without receptacle).

| | Plating | P/N |
|---|---|---|
| **Part number** | Black - *ROHS compliant* | **USBFTVSCCB** |
| | Nickel - *ROHS compliant* | **USBFTVSCCN** |
| | Olive drab cadmium | **USBFTVSCCG** |

**Remark**: also compatible with USBFTV 2.0 (type A) & USBBFTV (type B) square flange receptacles.
USBFTV2XX *(see page 106)*
USBBFTV2XX *(see page 110)*

■ **Panel gasket for square flange receptacle (thickness: 0,8 mm [.031]):**

**Part number: JE15**

Amphenol

# High Reliability USB 3.0 Cordsets

NEW

ROHS COMPLIANT

General construction: this is a USB-3.0 cable containing two 28 AWG 90Ω USB3.0 parallel shielded pair, one 28 AWG USB2.0 pair, and two 24 AWG power conductors, overall SFTP shields (SFTP = double shielding, braid and foild), jacketed in black UV resistant Polyurethane HFFR*. Designed for fixed or portable applications in industrial and harsh environments.
*HFFR: Halogen Free Flame Retardant.

**Jacket compound specification:**
Halogen Free Flame Retardant Polyether-based Polyurethane. Glossy finish. Excellent hydrolysis resistance. High microbial resistance. UV resistant. High flexibility.

## Applications

- Robotics
- Railways
- Battelfield communication
- Motion control
- CNC machines
- Industrial process

## PHYSICAL CHARACTERISTICS

| | |
|---|---|
| **DATA CONDUCTORS** | Tinned stranded copper, 7/0.13 mm nom (28 AWG) |
| **DATA INSULATION** | 1 mm nom |
| **COLOR DATA PAIR** | Green & white (USB2.0)<br>Yellow & blue, orange & violet (USB3.0) |
| **POWER CONDUCTORS** | Tinned copper, 7/0.2 mm (24 AWG) |
| **POWER INSULATION** | 1.1 mm nom |
| **COLOR POWER WIRE** | Red & Black |
| **SHIELDS** | USB 3.0 pair: foil + stranded tinned copper drain wire.<br>Overall: foil + shield braiding of tinner copper wires (coverage 85%). |
| **JACKET** | PU compound |
| **COLOR JACKET** | Black |
| **WEIGHT** | 31 lbs/1000ft (46 kg/km) |
| **OUTSIDE DIAM.** | 0.20 inch (5.7 mm nom. +/- 0.2) |
| **MIN BEND RADIUS** *(During operation)* | 57 mm (10 x O. D.) |
| **MIN BEND RADIUS** *(During installation)* | 28.5mm (5 x O.D.) |
| **TEMPERATURE installation & operational** | Plus 85°C, minus 40°C |

## ELECTRICAL CHARACTERISTICS

**USB3.0 Parallel pair**

| | |
|---|---|
| **Conductor resistance** | ≤ 210 Ohm/km |
| **Insulation resistance** | ≥ 200 MOhm/km |
| **Capacitance (1 kHz)** | nom. 43 nF/km |
| **Time delay** | nom. 5.0 ns/m |
| **Time delay skew** | ≤ 150 ps/10m |
| **Operating voltage (peak)** | ≤ 100 V |
| **Impedance** | 90 ±7 Ohm |
| **Test voltage** | 500 V |

**USB2.0 Pair**

| | |
|---|---|
| **Electrical requirements acc. to USB2.0** | |
| **Impedance** | 90 ±15 Ohm |
| **Test voltage** | 500 V |

**Attenuation**

| USB3.0 pair-db/10m | | USB2.0 pair-db/100m | |
|---|---|---|---|
| **625 MHZ** | 10 | **1 MHZ** | 4 |
| **1250 MHZ** | 15 | **4 MHZ** | 7.8 |
| **2500 MHZ** | 25 | **8 MHZ** | 11.4 |
| **5000 MHZ** | 36 | **12 MHZ** | 13.4 |
| **7000 MHZ** | 47 | **24 MHZ** | 19 |
| | | **48 MHZ** | 27 |
| | | **96 MHZ** | 38 |
| | | **200 MHZ** | 64 |
| | | **400 MHZ** | 116 |

Datas for cable alone only (without USB plug)

**IMPORTANT NOTE**
⇨for PC to PC application, use a **CROSSED** cable
⇨for PC to peripheral application use a **STRAIGHT cable**
*see page 87*

**CORDSETS WITH A USBA PLUG OVERMOLDED ON EACH END**

| | Length (m/ft) | **CROSSED** wiring part number *Black overmolding* | **STRAIGHT** wiring part number *Blue overmolding* |
|---|---|---|---|
| **UNDER USB3 SPECIFICATION ≤1.8 M** | 0.5 m / 1.64 ft | USB 3 A A CROSSED 050 PU HFFR | USB 3 A A STRAIGHT 050 PU HFFR |
| | 1 m / 3.28 ft | USB 3 A A CROSSED 100 PU HFFR | USB 3 A A STRAIGHT 100 PU HFFR |
| | 1.5 m / 4.92 ft | USB 3 A A CROSSED 150 PU HFFR | USB 3 A A STRAIGHT 150 PU HFFR |
| | 1.8 m / 5.91 ft | USB 3 A A CROSSED 180 PU HFFR | USB 3 A A STRAIGHT 180 PU HFFR |
| **OUT OF USB3 SPECIFICATION >1.8 M** | 2 m / 6.56 ft | USB 3 A A CROSSED 200 PU HFFR | USB 3 A A STRAIGHT 200 PU HFFR |
| | 2.5 m / 8.20 ft | USB 3 A A CROSSED 250 PU HFFR | USB 3 A A STRAIGHT 250 PU HFFR |
| | 3 m / 9.84 ft | USB 3 A A CROSSED 300 PU HFFR | USB 3 A A STRAIGHT 300 PU HFFR |
| | 3.5 m / 11.48 ft | USB 3 A A CROSSED 350 PU HFFR | USB 3 A A STRAIGHT 350 PU HFFR |
| | 4 m / 13.12 ft | USB 3 A A CROSSED 400 PU HFFR | USB 3 A A STRAIGHT 400 PU HFFR |
| | 4.5 m / 14.76 ft | USB 3 A A CROSSED 450 PU HFFR | USB 3 A A STRAIGHT 450 PU HFFR |
| | 5 m / 16.40 ft | USB 3 A A CROSSED 500 PU HFFR | USB 3 A A STRAIGHT 500 PU HFFR |

# USBF TV *(USB-A)*

**USB connection system for harsh environment**

ROHS COMPLIANT N & BZ

With USB Field, you can insert a standard USB 2.0 cordset into a metallic plug which will protect it from shocks, dust and fluids.
**No hazardous on-field cabling and grounding!**

This metallic plug is connected into a receptacle, using a Tri Start Thread coupling mechanism (MIL-DTL-38999 series III type) with anti-decoupling device for high vibrations.

## Applications

- Embedded computers
- Data acquisition and transmission in harsh environment
- Railways
- Battelfield communication systems
- Navy systems

## Data transmission

USB specification 2.0
Data rate: up to 480 Mbps for high speed USB

## Main characteristics

- Sealed against fluids and dusts (IP68)
- Shock, vibration and traction resistant
- No cabling operation in field and no tools required
- Improved EMI protection
- Tri Start Thread coupling mechanism (MIL-DTL-38999 series III type) with anti-decoupling device - Shell size 15
- 2 mechanical coding / polarization possibilities by the user (receptacle insert rotation)
- USBF TV plug retention in the receptacle: 100 N in the axis
- Mating cycles: 500 minimum

## Environmental protection

- Sealing (when mated): IP68 (temporary immersion)
- Salt spray: 48 h with nickel plating
  > 500 h with olive drab cadmium
  1000 h with marine bronze shell
- Fire retardant / low smoke: UL94 V0 and NF F 16 101 & 16 102
- Vibrations: 10 – 500 Hz, 10 g, 3 axes: no discontinuity > 1micro s
- Shocks: IK06: weight of 250 g drop from 40 cm [15.75 in] onto connectors (mated pair)
- Humidity: 21 days, 43°C, 98% humidity
- Temperature range: - 40°C / +85°C

## Part number code

| | | | | |
|---|---|---|---|---|
| **Series**<br>**USB Field TV** | **USBF TV** | **2** | **1** | **G** |
| **Shell type**<br>**6:** plug<br>**2:** square flange receptacle<br>**2PE:** square flange receptacle with metal backshell *(type 1)* & with metal backshell + plastic gland *(type 2)*<br>**2PEM:** square flange receptacle with backshell + metal gland *(only for back termination type 2 = Solder)*<br>**7:** jam nut receptacle<br>**7PE:** jam nut receptacle with metal backshell *(type 1)* & with metal backshell + plastic gland *(type 2)*<br>**7PEM:** jam nut receptacle with backshell + metal gland *(only for back termination type 2 = Solder)* | | | | |
| **Back terminations** *(receptacles only)*<br>**1:** female USB-A<br>**2:** solder (4 tinned holes) | | | | |
| **Shells material & finish**<br>**N:** aluminium shell - nickel plating - *ROHS compliant*<br>**G:** aluminium shell - olive drab cadmium plating<br>**BZ:** marine bronze shell - *ROHS compliant* | | | | |

*Examples:*
- Olive drab cadmium plug: USBF TV 6G
- Olive drab cadmium square flange receptacle, USB-A back terminat°: USBF TV 21G
- Olive drab cadmium jam nut receptacle, USB-A receptacle back terminat°: USBF TV 71G
- Nickel jam nut receptacle, solder back termination: USBF TV 72N

## Plug

■ Shell type 6

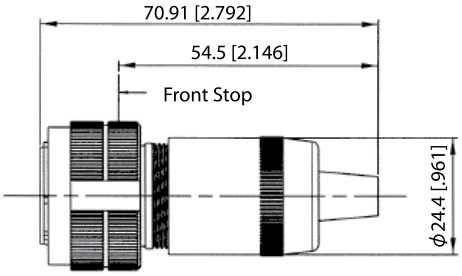


USBF TV 6 X

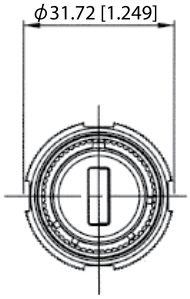


## Receptacles

■ Square flange receptacle
4 mounting holes: shell type 2

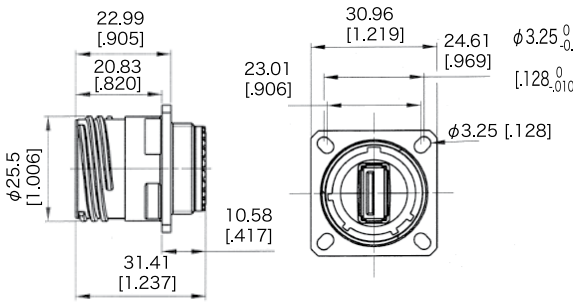


USBF TV 2 XX

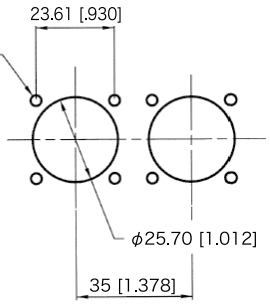


Panel Drilling

■ Jam nut receptacle
Hexagonal nut mounting: shell type 7

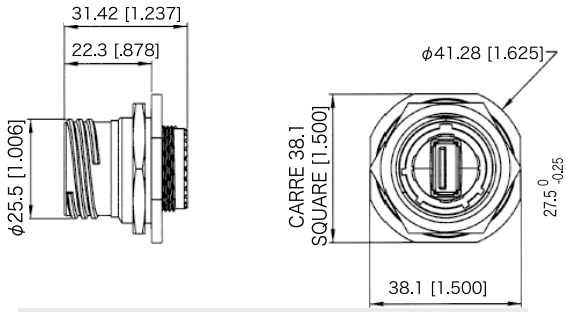


USBF TV 7 XX

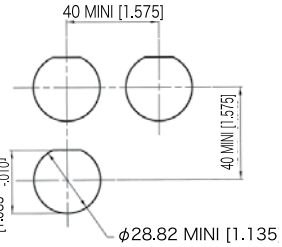


Panel Drilling

■ Receptacles with backshell:
Shell type 2PE and 7PE

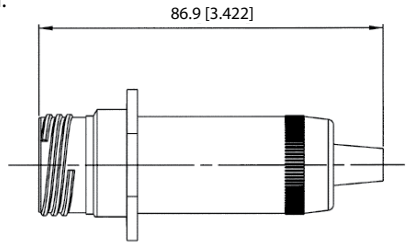


Backshell used with back termination type 1:
USB A receptacle (Not sealed)
Same panel drilling as USBFTV 2xx

USBF TV 2PE / 7PE-1

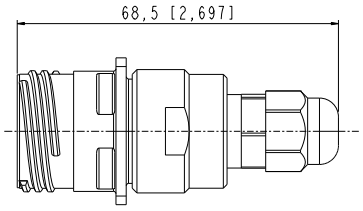


Backshell used with
back termination type 2:
Solder (Sealed – IP68)

USBF TV 2PE(M) / 7PE(M)-2

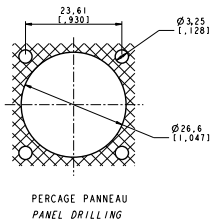


Panel Drilling *(for type 2 only)*

## Back terminations

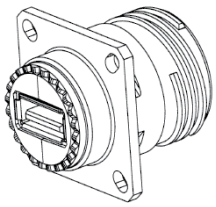

Type 1: female USB-A

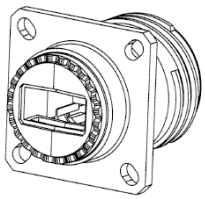

Type 2:
solder 4 Tinned holes to solder your cable

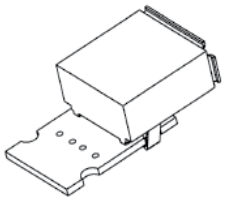

View of the PCB of the Type 2 version with
4 tinned holes for solder termination

## Assembly instructions

*Can be used with most the USB cordset brands : No tools required!*

### Plug assembly

1. Only if you need a full sealing (IP68): Install the white sticker around the plug, covering the 4 little holes of the overmolding
2. Insert the black O Ring around the front face of the USB A plug. This O Ring will ensure connection sealing
3. Insert the USB cordset into the metallic backshell
4. Insert the retention spacer laterally to the cable (this spacer is soft, in order to adapt to different shapes of overmolding) and slide the overmolding of the USB-A plug into this retention spacer
5. Insert the friction ring laterally to the cable
6. Choose the right coding (2 positions) and insert the USB-A plug into the protective plug. Note at this step, the main key is used for polarization.

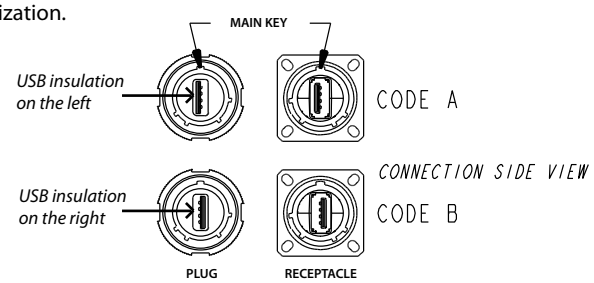


7. Screw the backshell on the plug body. A wrench can be necessary to fully tighten it, and the connection to the receptacle can help

**IMPORTANT NOTE**

The connection sealing is not done by the black retention spacer (which is sloted), but by the front face ORing (fig.2)

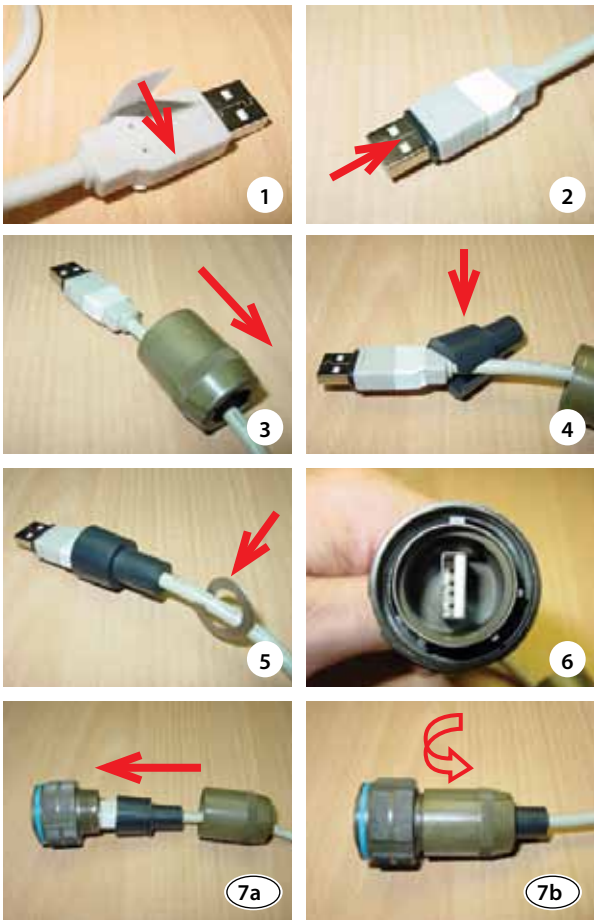


### Receptacle assembly

Insert the USB module from the rear. Reference is main key. Beware to have a coding compatible with the coding you used for the plug: on front view, the white shapes in the USBs must be on the same side.

To remove the USB module, insert the removal tool **USBF ODE** from the Front, and push back the module.

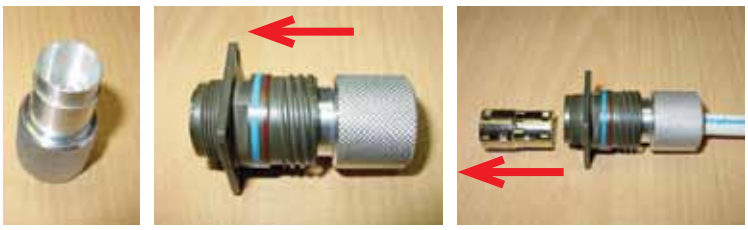

## Accessories

- **Metallic caps**

| | USBF TVC | 2 | G |
|---|---|---|---|
| **Connector type**<br>**6:** plug<br>**2:** square flange receptacle<br>**7:** jam nut eceptacle | | | |
| **Shells material & finish**<br>**N:** aluminium shell - nickel - *ROHS compliant*<br>**G:** aluminium shell - olive drab cadmium<br>**BZ:** marine bronze shell - *ROHS compliant* | | | |

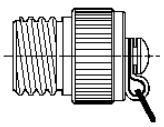

Plug Cap

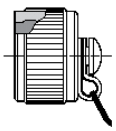

Receptacle Cap

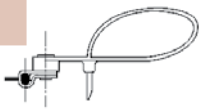

Plug Cap end

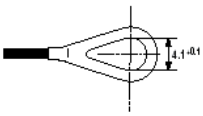

Square flange receptacle cap end

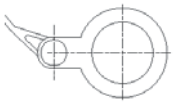

Jam Nut receptacle cap end

- Panel gasket for square flange receptacle
  Thickness: 0,8 mm [.031]
  P/n: **JE15**

- Receptacle insert removal tool: p/n **USBF ODE**

# USBF TV

## Transversally sealed receptacles

ROHS COMPLIANT N & BZ

In some applications, a transversal sealing for the receptacle is a « must ». This will prevent fluids and dust from going through the receptacle when plug or cap are not mated to the receptacle. The sealed solution (version "S") has a compound at the rear of the receptacle below. In addition, the Sealed USBF TV has been successfully tested in very high vibration corresponding to airplane applications.

### Main characteristics

- Sealed against fluids and dusts (IP68)
- Shock, vibration and traction resistant
- No cabling operation in field and no tools required
- Improved EMI protection
- Tri Start Thread coupling mechanism (MIL-DTL-38999 series III type) with anti-decoupling device - Shell size 15
- 2 mechanical coding/polarization possibilities by the user (receptacle insert rotation)
- USBF TV plug retention in the receptacle: 100 N in the axis
- Mating cycles: 500 minimum

### Environmental protection

- Sealing (when mated): IP68 (temporary immersion)
- Salt spray: 48 h with nickel plating
  > 500 h with olive drab cadmium
  1000 h with marine bronze shell
- Fire retardant / Low smoke: UL94 V0 and NF F 16 101 & 16 102
- Vibrations: 10 – 500 Hz, 10 g, 3 axes: no discontinuity > 1micro s
- Shocks: IK06 ▸ weight of 250 g drop from 40 cm [15.75 in] onto connectors (mated pair)
- Humidity: 21 days, 43°C, 98% humidity
- Temperature range: - 40°C / +85°C

### Applications

- Embedded computers
- Data acquisition and transmission in harsh environment
- Railways
- Battelfield communication systems
- Navy systems

### Data transmission

USB specification 2.0
Data rate: up to 480 Mb/s for high speed USB

### Part number code

| Series<br>USB Field TV | USBF TV | 2PES | A | 2 | N | 03 | A |
|---|---|---|---|---|---|---|---|
| **Shell Type**<br>**2S :** square flange receptacle<br>**2PES:** square flange receptacle + backshell + plastic gland<br>**2PEMS:** square flange receptacle + backshell + metal gland<br>**7S:** jam nut receptacle<br>**7PES:** jam nut receptacle + backshell + plastic gland<br>**7PEMS:** jam nut receptacle + backshell + metal gland | | | | | | | |
| **Coding**<br>**"A" (Standard) or "B"** | | | | | | | |
| **Back terminations**<br>**2:** rugged USB cable (*see corresponding datasheet page 109*) | | | | | | | |
| **Shells plating**<br>**N:** nickel<br>**G:** olive drab cadmium | | | | | | | |
| **USB cable length**<br>**03:** 30 cm [11.81 inches]<br>**05:** 50 cm [19.68 inches]<br>**10:** 1 meter [39.37 inches] | | | | | | | |
| **USB cable end**<br>**A:** standard USB-A plug<br>**OPEN:** open cable (no connector) | | | | | | | |

*Examples:* - Olive drab cadmium square flange receptacle with 30 cm of USB cable and standard USB-A plug: USBF TV 2S G 03 A
- Nickel jam nut receptacle + backshell + plastic gland, with 1 meter of USB cable, and a standard USBA-A plug: USBF TV 7PES N10 A

## Receptacles

- Square flange receptacle 4 mounting holes: shell type 2

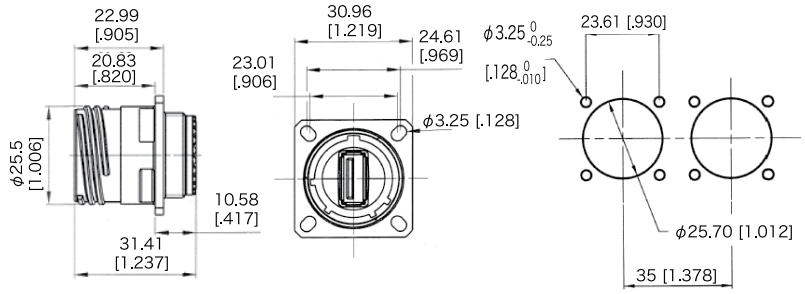


USBF TV 2SA XXX | Panel drilling

- Jam nut receptacle hexagonal nut mounting: shell type 7

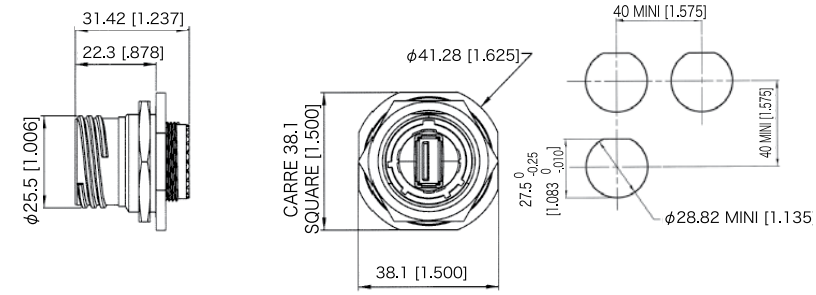


USBF TV 7SA XXX | Panel drilling

- Jam nut receptacle hexagonal nut mounting: shell type 7

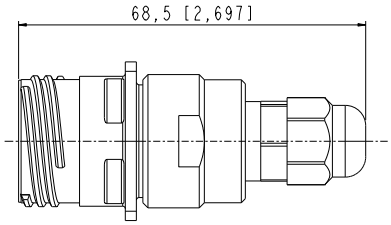


Backshell used with
back termination type 2:
Solder (Sealed – IP68)

USBFTV 2PE(M) SA2XXX / USBFTV 7PE(M) SA2 XXX

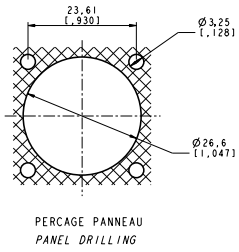


Panel drilling

## Cordset end

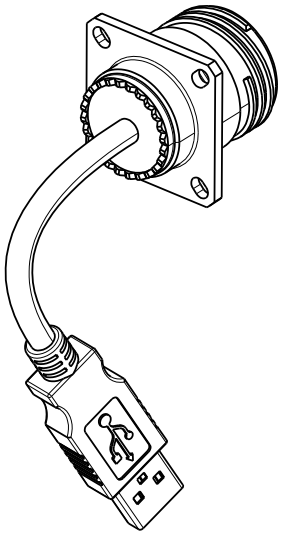

USB cable end type "A"

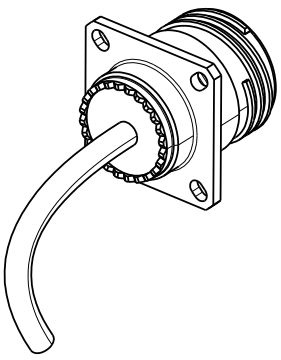

USB cable type "OPEN"

# USBF TV

## Hermetic receptacles

NEW

ROHS COMPLIANT N & BZ

In some applications, a transversal hermiticity for the receptacle is a « must ». This will prevent gas from going through the receptacle when plug or cap are not mated to the receptacle.
The hermetic solution (version "H") has a compound at the rear of the receptacle. Helium leakage is less than $1.10^{-6}$ $cm^3$ per second [0.1 micron cubit ft per hour] at one bar [15 psi] pressure differential.

### Applications

- Embedded computers
- Data acquisition and transmission in harsh environment
- Railways
- Battelfield communication systems
- Navy systems

### Data transmission

USB specification 2.0
Data rate: up to 480 Mb/s for high speed USB

### Main characteristics

- Same as the USBF TV (see page 76)... a complete IP68 sealing of the receptacle is added (even with no plug or no protective cap mated).
- Outside dimensions are the same as the standard USBF TV (USB-A).
- Vibrations : the compounded version of the USBF TV has been tested in vibration following the NAS 1599 aeronautic specification (ambient temperature):
5 - 3000 Hz, 20g, 2.5 mm [.1 inch] double amplitude, 3 axes, 12 hours
Note: this specification exceeds MIL-C-26500 requirements.

### IMPORTANT NOTE

Due to the compound, the coding of the connector must be done in the factory: use the codes A or B in the part number. ***Example***: USBFTV 2H **A** 2 N 03 A

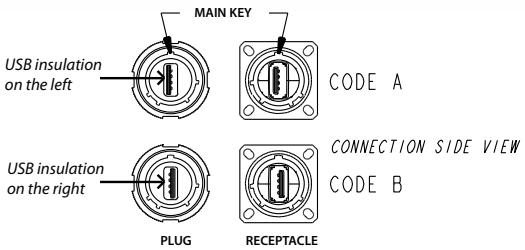


### Part number code

| | | | | | | | |
|---|---|---|---|---|---|---|---|
| **Series**<br>**USB Field TV** | **USBF TV** | **2H** | **A** | **2** | **N** | **03** | **A** |
| **Shell type**<br>**2H :** hermetic square flange receptacle<br>**2PEH:** hermetic square flange receptacle + backshell + plastic gland<br>**2PEMH:** hermetic square flange receptacle + backshell + metal gland<br>**7H:** hermetic jam nut receptacle<br>**7PEH:** hermetic jam nut receptacle + backshell + plastic gland<br>**7PEMH:** hermetic jam nut receptacle + backshell + metal gland | | | | | | | |
| **Coding**<br>**"A" (standard) or "B"** | | | | | | | |
| **Back terminations**<br>**2:** rugged USB cable (see corresponding datasheet page 109) | | | | | | | |
| **Shells plating**<br>**N:** nickel<br>**G:** olive drab cadmium | | | | | | | |
| **USB cable length**<br>**03:** 30 cm [11.81 inches]<br>**05:** 50 cm [19.68 inches]<br>**10:** 1 meter [39.37 inches] | | | | | | | |
| **USB cable end**<br>**A:** standard USB-A plug<br>**OPEN:** open cable (no connector) | | | | | | | |

*Examples:* - Olive drab cadmium hermetic square flange receptacle with 30 cm of USB cable and standard USB-A plug: USBF TV 2H G 03 A
- Nickel hermetic jam nut receptacle + backshell + plastic gland, with 1 meter of USB cable, and a standard USBA-A plug: USBF TV 7PEH N10 A

# USBF TV

## Receptacles with 360° EMI backshells

USBFTV receptacles series with EMI backshells provide 360° shielding: same protection than the one proposed per standard MIL-DTL-38999 serie III connectors. We offer these EMI backshells with square flange and jam nut receptacles. The available platings are nickel or olive drab cadmium. With those solutions we suggest using our reinforced USB cable (shielded – zero halogen jacket) ►*see page 109*

We can provide those receptacles:

- with cordset already soldered
- without cordset

**Example with a square flange receptacle** *(provided without cable)*

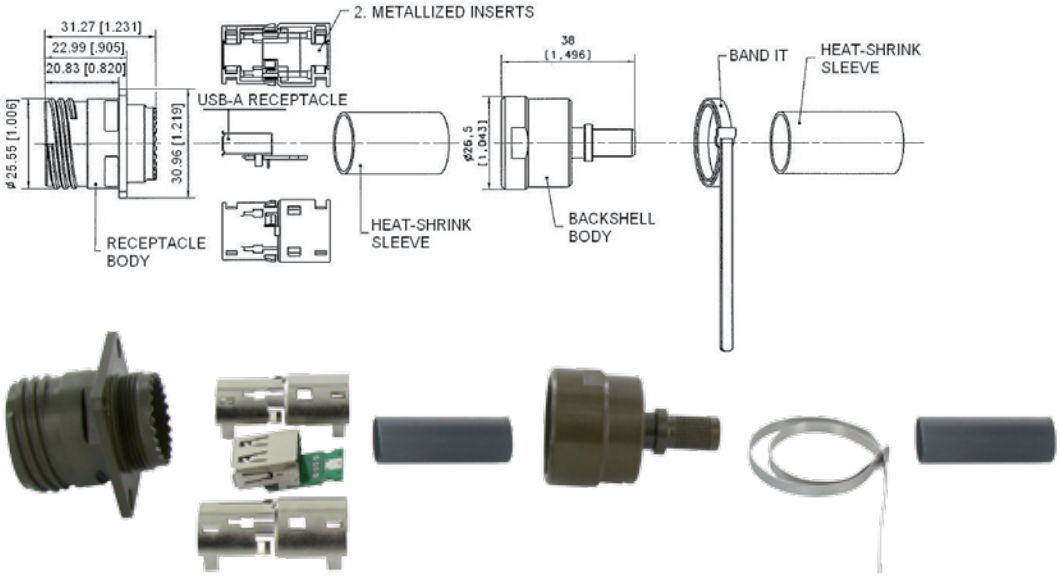


| Part number | Plating | Square flange receptacle | Jam nut receptacle |
|---|---|---|---|
| | Nickel - *ROHS compliant* | **KIT40263** | **KIT40245** |
| | Olive drab cadmium | **KIT40263G** | **KIT40245G** |

**IMPORTANT NOTE**

With receptacles provided without cable, customer will have to solder his cable on the PCB ; please find below the cabling specification.
If customer prefers to use his cable, please check with us compatibility with our EMI backshells: ***www.usbfield.com***

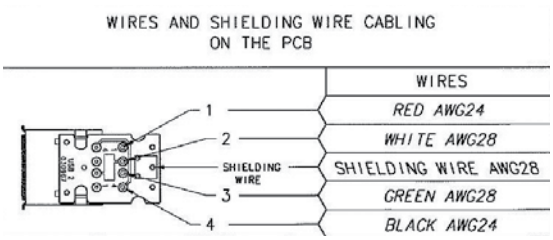


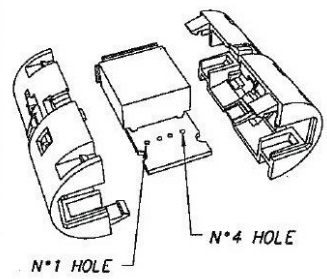

# USBF TV

## Through bulkhead

NEW

### Receptacle

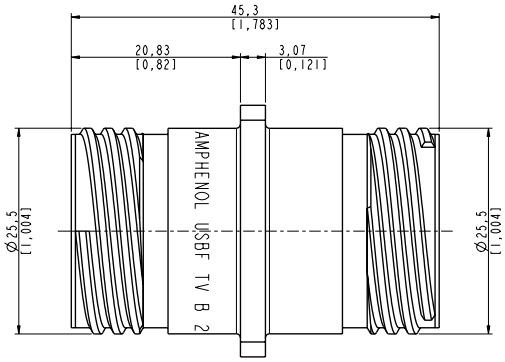


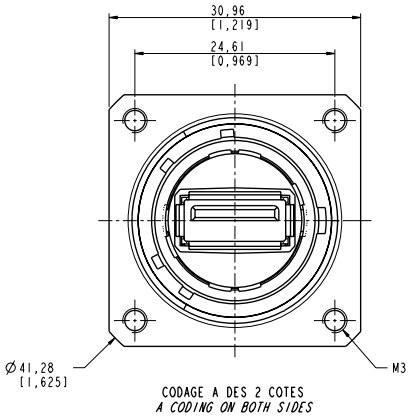


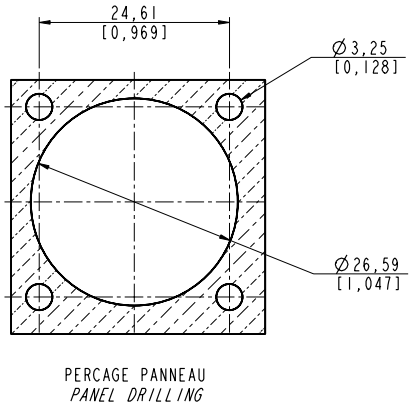


| Part number | Plating | P/N |
|---|---|---|
| | Nickel - *ROHS compliant* | USBF TV B 2 **N** |
| | Olive drab cadmium | USBF TV B 2 **G** |

**Nota :** could be used with plug USBFTV, nickel and olive drab cadmium. See page 97.

# USBF TV

## Stand off receptacles

These receptacles can be soldered directly to your PCB. A compound insures a transversal sealing and good performance in high-vibration environments.
The shell of those receptacles are in the "Stand Off" style.
They can be connected with rugged USBF TV series plugs.

### Square flange receptacle

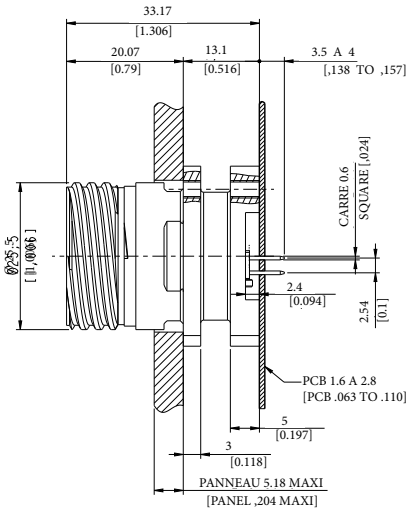


### Datas for coding A

*Coding B is also available, please consult us.*

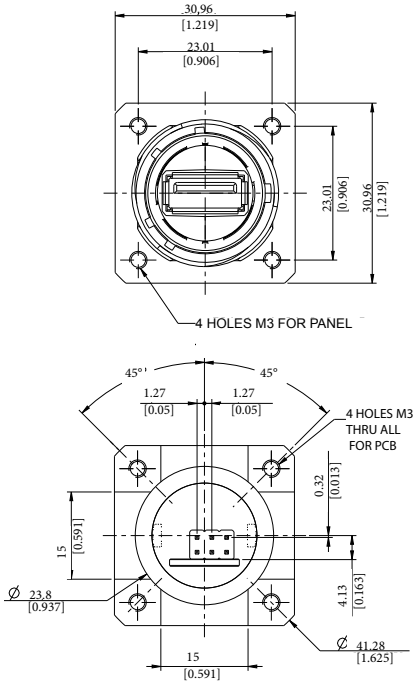


| Part number | Plating | P/N for coding A | P/N for coding B |
|---|---|---|---|
| | Nickel - *ROHS compliant* | USBF TV 25 N F459 | USBF TV 2S B 5 N F459 |
| | Olive drab cadmium | USBF TV 25 G F459 | USBF TV 2S B 5 G F459 |

### Connection side view

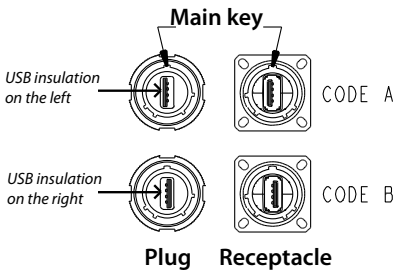


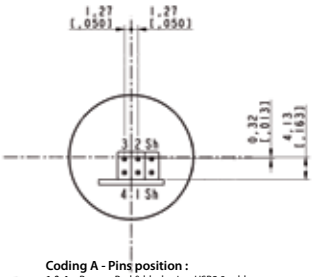

**Coding A - Pins position :**
**1 & 4** = Power - Red & black wires USB2.0 cable
**2 & 3** = Signal - White & green wires USB2.0 cable
**Sh** = Shield

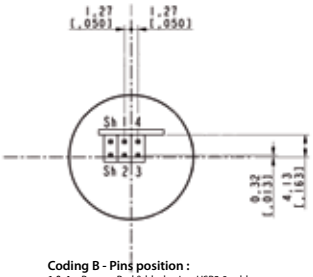

**Coding B - Pins position :**
**1 & 4** = Power - Red & black wires USB2.0 cable
**2 & 3** = Signal - White & green wires USB2.0 cable
**Sh** = Shield

### Recommended PCB hole LAYOUT (Coding A) - Solder side view

*Nota : for coding B, please consult us.*

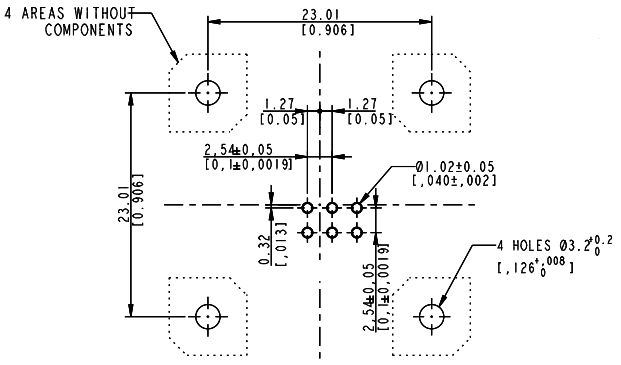


### Panel drilling

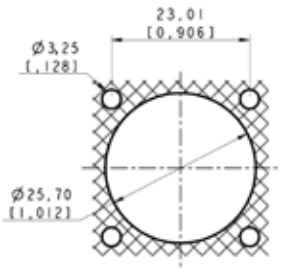


Amphenol

## Jam nut receptacle

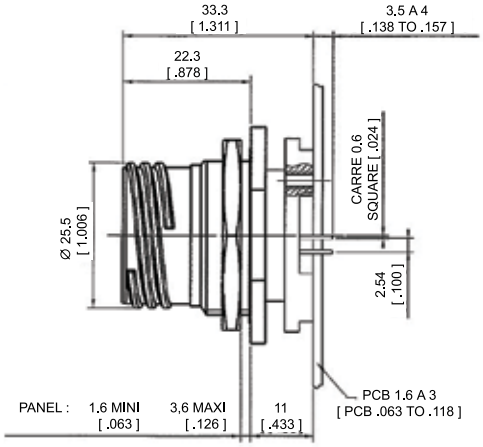


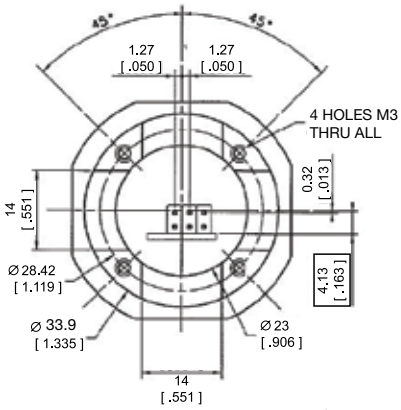


| Part number | Plating available | P/N for coding A | P/N for coding B |
|---|---|---|---|
| | Nickel - *ROHS compliant* | **USBF TV 75 N F459** | **USBF TV 7S B 5 N F459** |
| | Olive drab cadmium | **USBF TV 75 G F459** | **USBF TV 7S B 5 G F459** |

### Connection side view

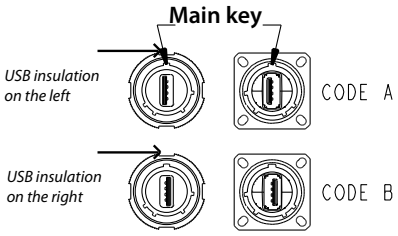


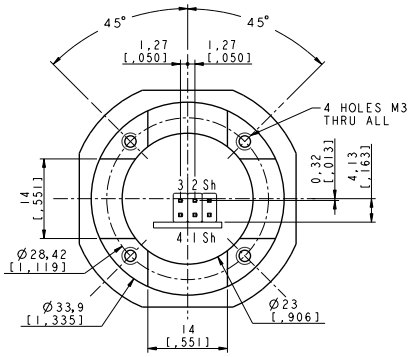


**Coding A - Pins position :**
**1 & 4** = Power - Red & black wires USB2.0 cable
**2 & 3** = Signal - White & green wires USB2.0 cable
**Sh** = Shield

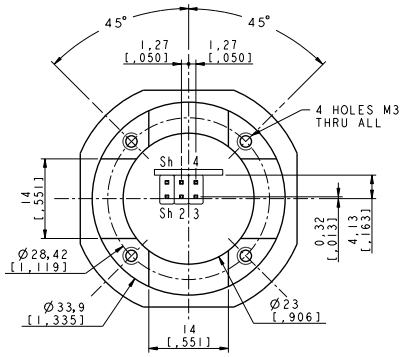


**Coding B - Pins position :**
**1 & 4** = Power - Red & black wires USB2.0 cable
**2 & 3** = Signal - White & green wires USB2.0 cable
**Sh** = Shield

### Recommended PCB hole LAYOUT

*Solder side view*

#### Coding A

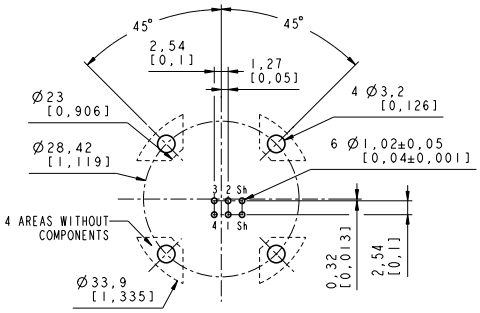


#### Coding B

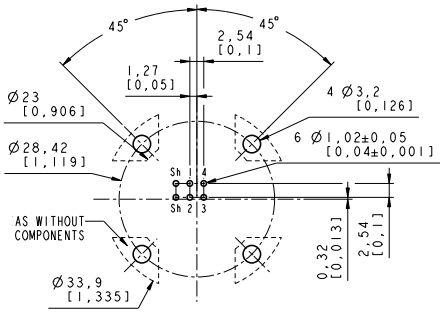


#### Panel drilling

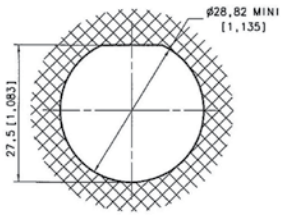

# USB 2.0 Receptacle with Self Closing Cap

This Self Closing Cap automatically protects the USB Field square flange receptacles (MIL-C-26482 type), protecting your system from dust and water projections.
The same cap can be used to protect RJ45, USB3.0, USBB and IEEE1394 receptacles. A spring automatically closes the upper part of the cap when either the RJ Field plug, RJ45 cordset, USB or IEEE1394 cordset, or USB key are removed from the receptacle.

## USBF 21 X SCC

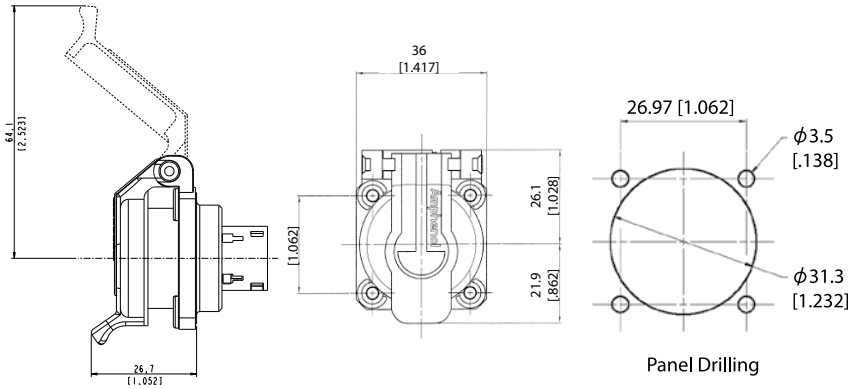


**Version: USB-A** *(front and back termination)*

| | | Plating | Metallized inserts (EMI) |
|---|---|---|---|
| **Part number *** | **USBF 21B SCC** | Black coated | No (blank insert) |
| | **USBF 21N SCC** | Nickel plated | Yes |
| | **USBF 21G SCC** | Olive drab cadmium plated | Yes |

* The part number includes the receptacle + the self closing cap

■ **Note**: Panel gasket with any of these receptacles: **JE18**

## RJF 21 X SCC, USBBF 21 X SCC, & IEEE1394

RJ45 version

*(see page 25)*

USB3.0-A version

*(see page 94)*

USB-B version

*(see page 118)*

IEEE1394 version

*(see page 143)*

# Metallic Self Closing Cap (SCC)

**For USBF TV 2.0 square flange receptacles.**

This Self Closing cap automatically protects the USBF TV (2.0 - type A) square flange receptacles (MIL-DTL-38999 type), protecting your system from dust and water projection.
A spring automatically closes the upper part of the cap when the USB plug is removed from the receptacle.

**Sealing level IP67**

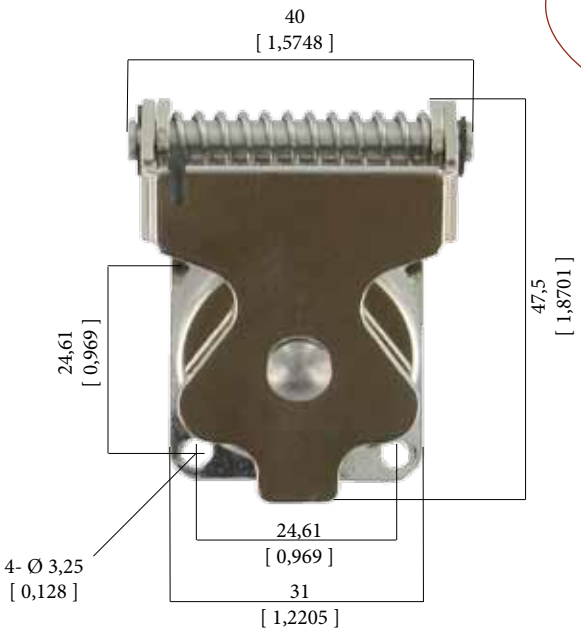


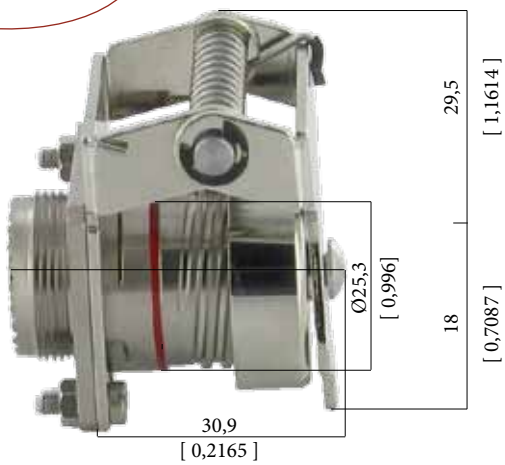


**IMPORTANT NOTE**
Metal Self Closing cap are sold separately (without receptacle).

| | Plating | P/N |
|---|---|---|
| **Part number** | Black - *ROHS compliant* | **USBFTVSCCB** |
| | Nickel - *ROHS compliant* | **USBFTVSCCN** |
| | Olive drab cadmium | **USBFTVSCCG** |

**Remark**: also compatible with USB3FTV (type A) & USBBFTV (type B) square flange receptacles:
USB3FTVXX *(see page 95)*
USBBFTV2XX *(see page 119)*

■ **Panel gasket for square flange receptacle (thickness: 0,8 mm [.031]):**

**Part number: JE15**

# High Reliability USB 2.0 Cordsets

ROHS COMPLIANT

General construction: this is a USB-2.0 cable containing one 28 AWG 90Ω characteristic impedance data pair, two 24 AWG power conductors, overall SFTP shields (SFTP = double shielding, braid and foild), jacketed in black UV resistant Polyurethane HFFR*. Designed for fixed or portable applications in industrial and harsh environments.
*HFFR: Halogen Free Flame Retardant.

**Jacket compound specification:**
Halogen Free Flame Retardant Polyether-based Polyurethane. Glossy finish. Excellent hydrolysis resistance. High microbial resistance. UV resistant. High flexibility.

**Applications**
- Robotics
- Motion control
- Railways
- CNC machines
- Battelfield communication
- Industrial process

Datas for cable alone only (without USB plug)

## PHYSICAL CHARACTERISTICS

| | |
|---|---|
| **DATA CONDUCTORS** | bare copper, 7/0.12 mm nom (28 AWG) |
| **DATA INSULATION** | 0.9 mm nom |
| **COLOR DATA PAIR** | Green & white |
| **POWER CONDUCTORS** | Tinned copper, 7/0.2 mm (24 AWG) |
| **POWER INSULATION** | 1.1 mm nom |
| **COLOR POWER WIRE** | Red & Black |
| **SHIELDS** | Foil: poviding 100% coverage, in contact with tinned copper drain wire and an overall braid providing 65% nom. coverage made of 16x5/0.1 mm tinned copper strands |
| **JACKET** | PU compound |
| **COLOR JACKET** | Black |
| **WEIGHT** | 26 lbs/mft (38 kg/km) |
| **OUTSIDE DIAM.** | 0.20 inch (5.1 mm nom. +/- 0.15) |
| **MIN BEND RADIUS** *(During installation)* | 45.9 mm (9x O. D.) |
| **MIN BEND RADIUS** *(During operation)* | 25.5mm (5 x O.D.) |
| **TEMPERATURE installation** | Plus 60°C, minus 5°C |
| **TEMPERATURE operational** | Plus 85°C, minus 40°C |

## ELECTRICAL CHARACTERISTICS

| | |
|---|---|
| **DC RESISTANCE** | 94 Ohms/Km @ 20°C |
| **IMPEDANCE** | 90 +/- 13 Ohms 1-400 MHz |
| | |
| **ATTENUATION** | |
| **1 KHZ** | 8 db/100m max. |
| **4 MHZ** | 15,6 db/100m max. |
| **24 MHZ** | 38 db/100m max. |
| **96 MHZ** | 76 db/100m max. |
| **200 MHZ** | 128 db/100m max. |
| **400 MHZ** | 232 db/100m max. |
| | |
| **CAPACITANCE 2X28 AWG** | 54pF/m nom. @ 1KHz |
| **CAPACITANCE UNBALANCE** | 2.0 pF/m max. @ 1KHz (wire to ground) |
| **DIELECTRIC STRENGTH** | VAC/1 min - 500 V/Min |
| **RESISTANCE UNBALANCE** | 2% max. @ 20°C |
| **VELOCITY OF PROPAGATION** | 65% min. 68% max. |

**CORDSETS WITH A USB A PLUG OVERMOLDED ON EACH END (OUT OF USB SPECIFICATION > 5 M)**

| Length (m/ft) | Part number |
|---|---|
| 6 m / 19,68 ft | USB2 AA 600 PU HFFR |
| 7 m / 22.96 ft | USB2 AA 700 PU HFFR |
| 8 m / 26.24 ft | USB2 AA 800 PU HFFR |
| 9 m / 29.52 ft | USB2 AA 900 PU HFFR |
| 10 m / 32.80 ft | USB2 AA 1000 PU HFFR |

**REEL OF DRUM (WITHOUT USB PLUG ON ENDS)**

| Length | PN |
|---|---|
| 300 m / ~ 984 ft | 190-040567-00 |

**CORDSETS WITH A USB A PLUG OVERMOLDED ON EACH END (UNDER USB SPECIFATION ≤ 5M)**

| Length (m/ft) | Part number |
|---|---|
| 0.5 m / 1,64 ft | USB2 AA 050 PU HFFR |
| 1 m / 3.28 ft | USB2 AA 100 PU HFFR |
| 1.50 m / 4.92 ft | USB2 AA 150 PU HFFR |
| 2 m / 6.56 ft | USB2 AA 200 PU HFFR |
| 2.50 m / 8.2 ft | USB2 AA 250 PU HFFR |
| 3 m / 9.84 ft | USB2 AA 300 PU HFFR |
| 3.50 m / 11.48 ft | USB2 AA 350 PU HFFR |
| 4 m / 13.12 ft | USB2 AA 400 PU HFFR |
| 4.5 m / 14.76 ft | USB2 AA 450 PU HFFR |
| 5 m / 16.40 ft | USB2 AA 500 PU HFFR |

# USBF SC

## Quick release series

ROHS COMPLIANT N & BZ

This product offers a new coupling solution, particurlarly for applications requiring quick disconnect. The system consists of a circular spring within in the receptacle keeping the plug mated, and creating an internal coupling mechanism.

### Main characteristics

- Sealed against fluids and dusts (IP67)
- Shock, vibration and traction resistant
- No cabling operation in field and no tools required
- Improved EMI protection
- Mating cycles: 500
- Mating force after 500 cycles: 40 N
- Unmating force after 500 cycles: 55 N

### Environmental protection

- Sealing (when mated): IP67 (temporary immersion)
- Salt spray: 48 h with nickel plating
  > 500 h with olive drab cadmium
- Fire retardant / Low smoke: UL94 V0 and NF F 16 101 & 16 102
- Vibrations: 10 – 500 Hz, 10 g, 3 axes: no discontinuity > 1micro s
- Shocks: IK06 ►weight of 250 g drop from 40 cm [15.75 in] onto connectors (mated pair)
- Humidity: 21 days, 43°C, 98% humidity
- Temperature range: - 40°C / +85°C

### Applications

- Embedded computers
- Data acquisition and transmission in harsh environment
- Railways
- Battelfield communication systems
- Navy systems

### Data transmission

USB specification 2.0
Data rate: up to 480 Mb/s for high speed USB

### Part number code

| | | | | |
|---|---|---|---|---|
| **Series**<br>**USBF spring loaded** | **USBF SC** | **2** | **1** | **G** |
| **Shell Type**<br>**6:** plug<br>**1:** inline receptacle<br>**2:** square flange receptacle<br>**7:** jam nut receptacle | | | | |
| **Back terminations** *(receptacles only)*<br>**1:** female USB-A<br>**2:** solder (4 tinned holes) - Not available for shell type "1" (inline receptacle) | | | | |
| **Shells material & finish**<br>**N:** aluminium shell - nickel plating - *ROHS compliant*<br>**G:** aluminium shell - olive drab cadmium plating<br>**BZ:** marine bronze shell - *ROHS compliant* | | | | |

### Back terminations

USBFSC Back terminations receptacles

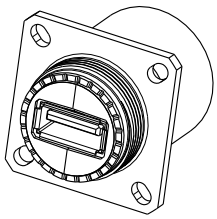

Type **1**: female USB-A

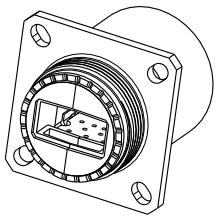

Type **2**: solder (4 tinned holes)

Amphenol

## Plug

### Shell type 6

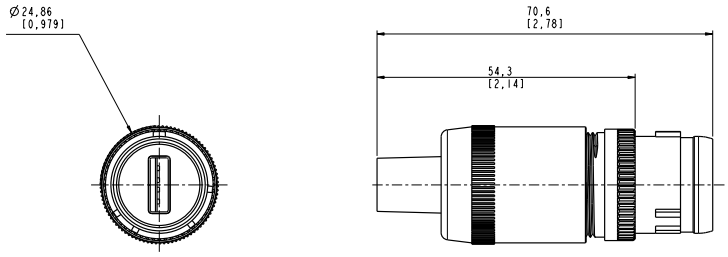


USBFSC 6 X

## Receptacles

### Square flange receptacle 4 mounting holes: shell type 2

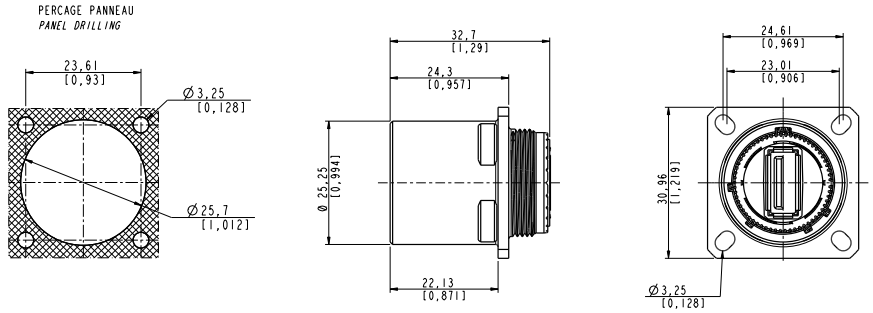


USBFSC 21 X

### Jam nut receptacle hexagonal nut mounting: shell type 7

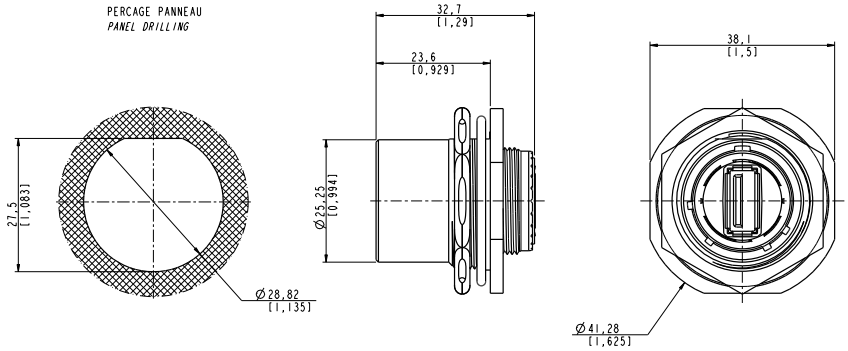


USBFSC 71 X

### Inline receptacle: shell type 1

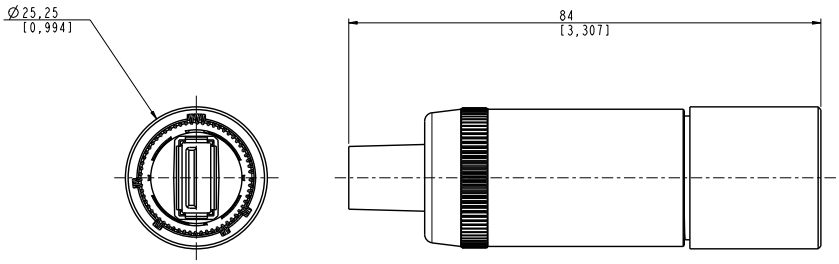


USBFSC 11 X

Amphenol

# USBBF TV *(USB-B)*

## USB connection system for harsh environment

**USB Field allows you to use a standard USB 2.0 connection in harsh environment:.**

### Main characteristics

- Sealed against fluids and dusts (IP68)
- Shock, vibration and traction resistant
- No cabling operation in field and no tools required
- Improved EMI protection
- Tri Start Thread coupling mechanism (MIL-DTL-38999 series III type) with anti-decoupling device - Shell size 15
- Plug retention in the receptacle: 100N in the axis
- Mating cycles: 500 minimum
- Back terminations available:
  - a USB-A receptacle
  - solder: 4 tinned holes on the PCB to solder your wire

### Environmental protection

- Sealed against fluids and dusts (IP68)
- Temperature range: - 40°C / +85°C

### Applications

- Embedded Computers
- Data Acquisition and transmission in harsh environment
- Railways
- Battelfield Communication Systems
- Navy Systems

### Data transmission

USB specification 2.0
Data rate: up to 480 Mb/s for high speed USB

### Part number code

| | | | | |
|---|---|---|---|---|
| **Series**<br>**USBB Field TV** | **USBBF TV** | **2** | **1** | **G** |
| **Shell type**<br>**6:** plug<br>**2:** square flange receptacle<br>**2PE:** square flange receptacle with metal backshell *(type 1)* & with metal backshell + plastic gland *(type 2)*<br>**2PEM:** square flange receptacle metal gland (only for soldering back termination type 2)<br>**7:** jam nut receptacle<br>**7PE:** jam nut receptacle with metal backshell *(type 1)* & with metal backshell + plastic gland *(type 2)*<br>**7PEM:** jam nut receptacle metal gland (only for soldering back termination type 2) | | | | |
| **Back terminations** *(receptacles only)*<br>**1:** female USB-A<br>**2:** solder (4 tinned holes) | | | | |
| **Shells material & finish**<br>**N:** aluminium shell - nickel plating - *ROHS compliant*<br>**G:** aluminium shell - olive drab cadmium plating | | | | |

Examples:
- Plug-cadmium plating: USBBF TV 6G
- Square flange receptacle-USB-A back termination - cadmium plating: USBBF TV 21G
- Jam nut receptacle, solder termination -nickel plating: USBBF TV 72N

### Back terminations

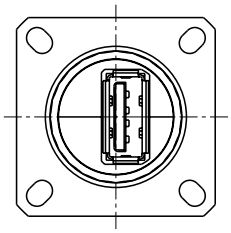

Type **1**: female USB-A

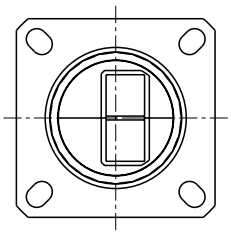

Type **2**: solder (4 tinned holes)

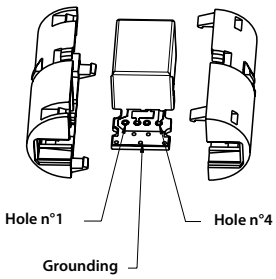

## Plug

■ Shell type 6

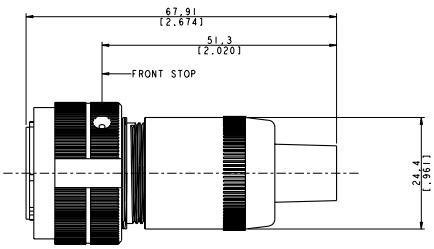


USBBFTV 6 X

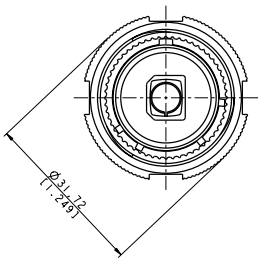


Panel Drilling

## Receptacles

■ Shell type **2** - Square flange receptacle

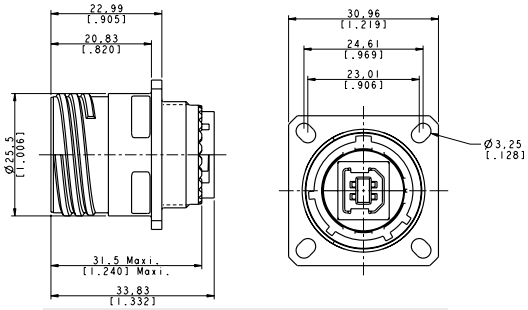


USBBFTV 2 XX

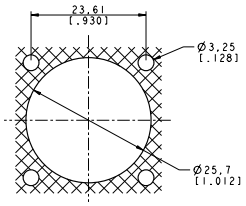


Panel Drilling

■ Shell type **7** - Jam nut receptacle

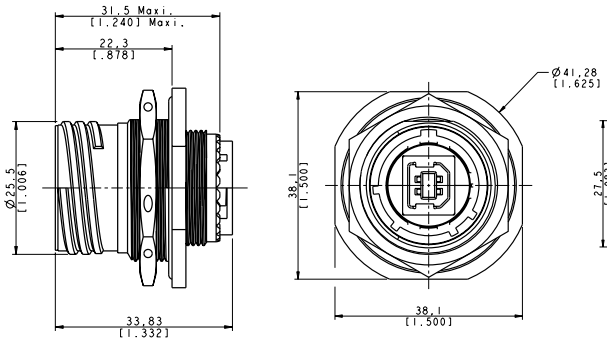


USBBFTV 7 XX

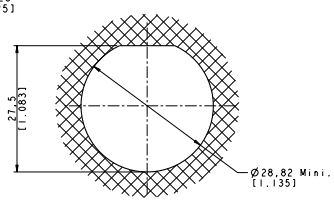


Panel Drilling

■ «**2PEM**» and «**7PEM**» shells with backshell to protect back termination from dust, shocks and vibration.

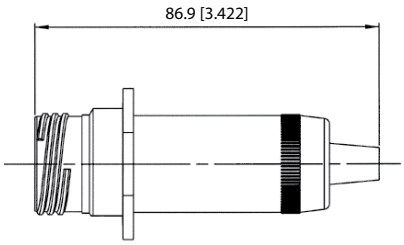


Backshell used with back termination type 1:
USB A receptacle (Not sealed)

Same panel drilling as USBBFTV 2xx

USBBF TV 2PE / 7PE-1

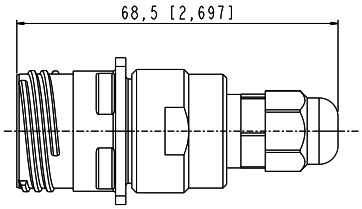


Backshell used with
back termination type 2:
Solder (Sealed – IP68)

USBBF TV 2PE(M) / 7PE(M)-2

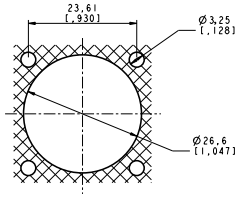


PERCAGE PANNEAU
*PANEL DRILLING*

Panel drilling *(for type 2 only)*

## Accessories

■ **Metallic caps** (same as USB-A version - see page 99)

| | USBF TVC | 2 | G |
|---|---|---|---|
| **Connector type**<br>**6:** plug<br>**2:** square flange receptacle<br>**7:** jam nut receptacle | | | |
| **Shells material & finish**<br>**N:** nickel plating - *ROHS compliant*<br>**G:** olive drab cadmium plating | | | |

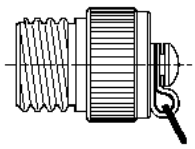

Plug Cap

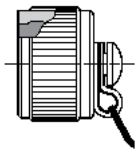

Receptacle Cap

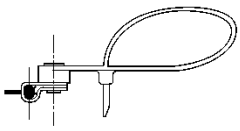

Plug Cap end

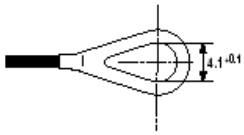


Square flange receptacle cap end

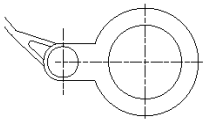

Jam Nut receptacle cap end

■ Panel gasket for square flange receptacle (thickness: 0,8 mm [.031]): p/n **JE15**

# USBBF TV

## Stand off receptacles

These receptacles can be soldered directly to your PCB. A compound insures a transversal sealing and good performance in high-vibration environments.
The shell of those receptacles are in the "Stand Off" style.
They can be connected with USBBF TV series plugs.

### Square flange receptacle

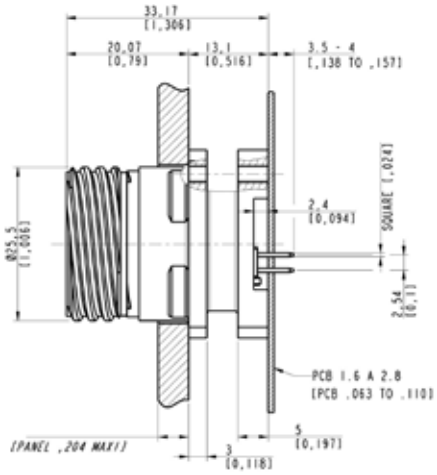


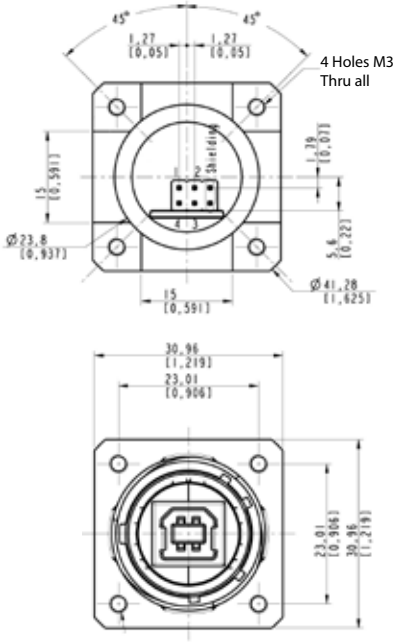


| Part number | Plating | Part number |
|---|---|---|
| | Nickel - *ROHS compliant* | **USBBF TV 2 5 N F459** |
| | Olive drab cadmium | **USBBF TV 2 5 G F459** |

### Recommended PCB hole LAYOUT

*Solder side view*

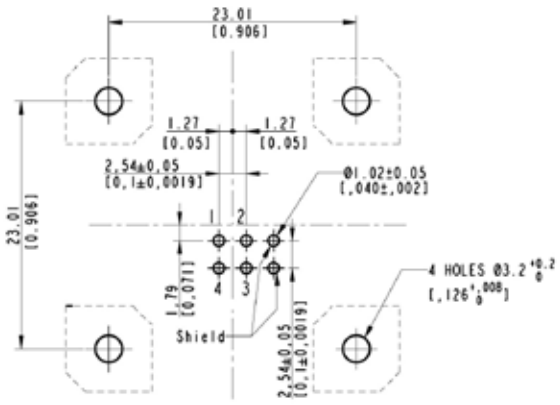


### Panel drilling

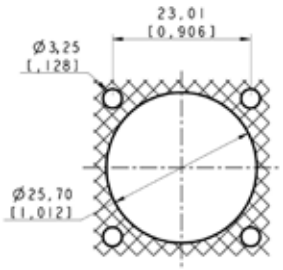


Amphenol

## Jam nut receptacle

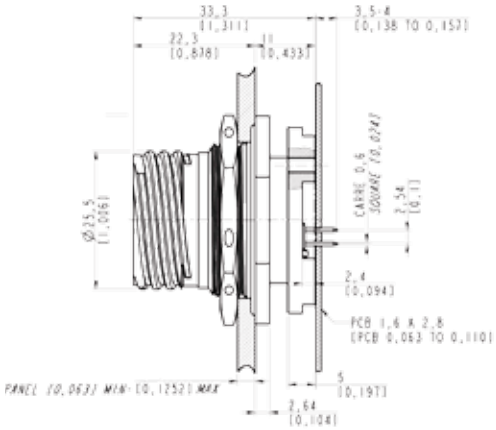

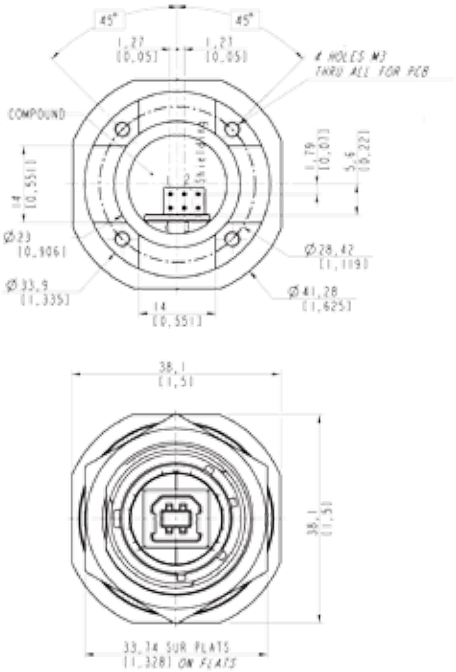

| Part number | Plating | Part number |
|---|---|---|
| | Nickel - *ROHS compliant* | **USBBF TV 7 5 N F459** |
| | Olive drab cadmium | **USBBF TV 7 5 G F459** |

### Recommended PCB hole LAYOUT

*Solder side view*

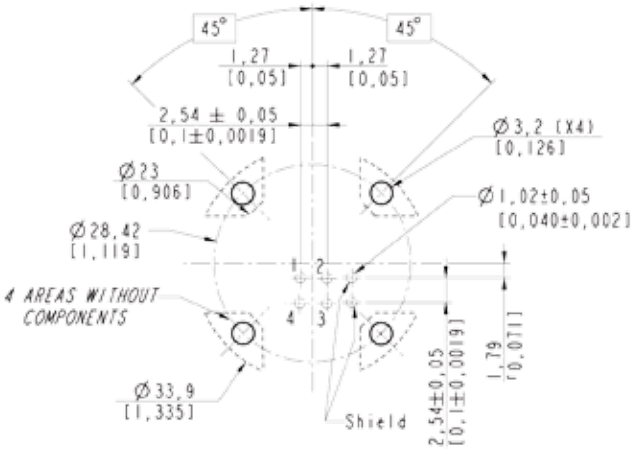


### Panel drilling

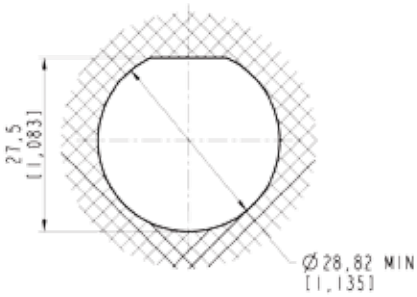

# USBBF TV

## Transversally sealed receptacles

With USB Field, you can insert a standard USB 2.0 cordset into a metallic plug which will protect it from shocks, dust and fluids.
**No hazardous on-field cabling and grounding!**
This metallic plug is connected into a receptacle, using a Tri Start Thread coupling mechanism (MIL-DTL-38999 series III type) with anti-decoupling device for high vibrations.

### Applications

- Embedded computers
- Data acquisition and transmission in harsh environment
- Railways
- Battelfield communication systems
- Navy systems

### Data transmission

USB specification 2.0
Data rate: up to 480 Mb/s for high speed USB

### Main characteristics

- Sealed against fluids and dusts (IP68)
- Shock, vibration and traction resistant
- No cabling operation in field and no tools required
- Improved EMI protection
- Tri Start Thread coupling mechanism (MIL-DTL-38999 series III type) with anti-decoupling device - Shell size 15
- 2 mechanical coding/polarization possibilities by the user (receptacle insert rotation)
- USBF TV plug retention in the receptacle: 100 N in the axis
- Mating cycles: 500 minimum

### Environmental protection

- Sealing (when mated): IP68 (temporary immersion)
- Salt spray: 48 h with nickel plating
  > 500 h with olive drab cadmium
  1000 h with marine bronze shell
- Fire retardant / Low smoke: UL94 V0 and NF F 16 101 & 16 102
- Vibrations: 10 – 500 Hz, 10 g, 3 axes: no discontinuity > 1micro s
- Shocks: IK06 ▸ weight of 250 g drop from 40 cm [15.75 in] onto connectors (mated pair)
- Humidity: 21 days, 43°C, 98% humidity
- Temperature range: - 40°C / +85°C

### Part number code

| | | | | | | |
|---|---|---|---|---|---|---|
| **Series**<br>**USBB Field TV** | **USBBF TV** | **7S** | **2** | **G** | **10** | **OPEN** |
| **Shell type**<br>**2S:** sealed square flange receptacle<br>**2PES:** sealed square flange receptacle + backshell + plastic gland<br>**2PEMS:** sealed square flange receptacle + backshell + metal gland<br>**7S:** sealed jam nut receptacle<br>**7PES:** sealed jam nut receptacle with backshell<br>**7PEMS:** sealed jam nut receptacle + backshell + metal gland | | | | | | |
| **Back terminations**<br>**2:** rugged USB cable | | | | | | |
| **Shells plating**<br>**N:** nickel<br>**G:** olive drab cadmium | | | | | | |
| **USB cable length**<br>**03:** 30 cm [11.81 inches]<br>**05:** 50 cm [19.68 inches]<br>**10:** 1 meter [39.37 inches] | | | | | | |
| **USB cable end**<br>**A:** standard USB-A plug<br>**OPEN:** open USB cable (no connector) | | | | | | |

*Examples*: - Olive drab cadmium jam nut receptacle: USBBF TV 7 XX
- Nickel square flange receptacle: USBBF TV 2 XX

# USBB receptacle with Self Closing Cap

NEW

ROHS COMPLIANT N & B

Sealing level IP54
(Splash and dust Proof)

This Self Closing Cap automatically protects the RJ Field square flange receptacles (MIL-C-26482 type), protecting your system from dust and water projections. The same cap can be used to protect USB and IEEE1394 receptacles. A spring automatically closes the upper part of the cap when either the RJ Field plug, RJ45 cordset, USB or IEEE1394 cordset, or USB key are removed from the receptacle.

## USBBF 21 X SCC

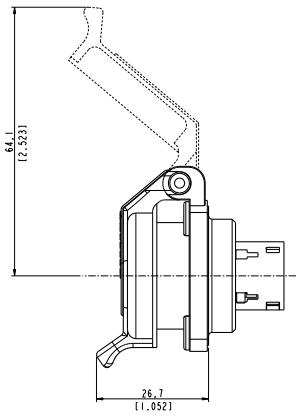


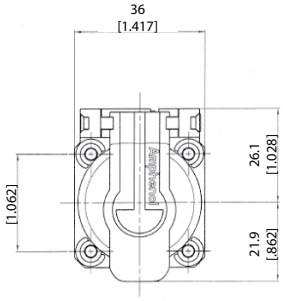


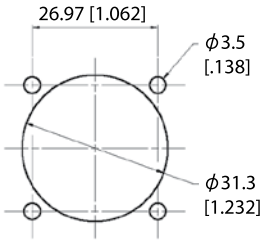


Panel Drilling

**Version: USB-B** *(front in USB-B and back termination in USB-A)*

| | Plating | Metallized inserts (EMI) | Part number |
|---|---|---|---|
| **Part number*** | Black coated | No (*blank insert*) | **USBBF 21B SCC** |
| | Nickel plated | Yes | **USBBF 21N SCC** |
| | Olive drab cadmium plated | Yes | **USBBF 21G SCC** |

* The part number includes the receptacle + the self closing cap

■ **Note**: panel gasket with any of these receptacles, p/n **JE18**

## RJF 21 X SCC, USBF 21 X SCC, & IEEE1394

**RJ45 version**
*(see page 25)*

**USB2.0 & 3.0 - A version**
*(see pages 94 & 107)*

**IEEE1394 version**
*(see page 143)*

# Metallic Self Closing Cap (SCC)

**For USBB square flange receptacles.**

This Self Closing cap automatically protects the USBB (2.0 - type A) square flange receptacles (MIL-DTL-38999 type), protecting your system from dust and water projection.
A spring automatically closes the upper part of the cap when the USB plug is removed from the receptacle.

**Sealing level IP67**

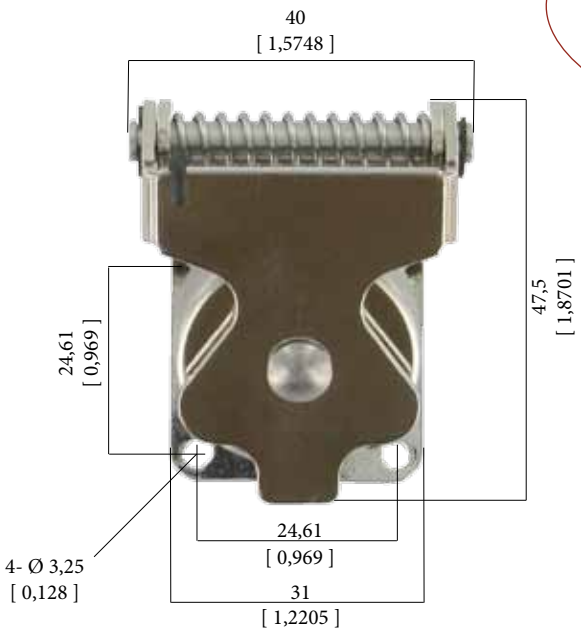


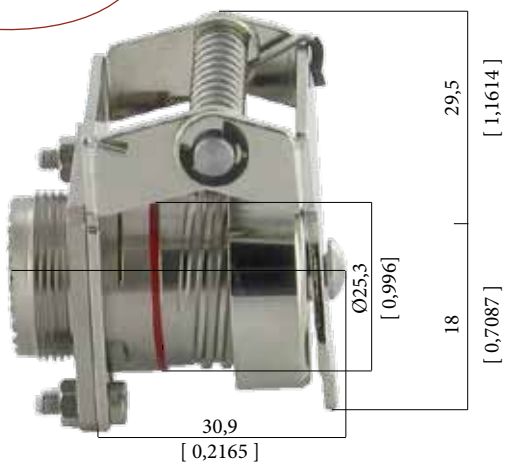


**IMPORTANT NOTE**
Metal Self Closing cap are sold separately (without receptacle).

| | Plating | P/N |
|---|---|---|
| **Part number** | Black - *ROHS compliant* | **USBFTVSCCB** |
| | Nickel - *ROHS compliant* | **USBFTVSCCN** |
| | Olive drab cadmium | **USBFTVSCCG** |

**Remark**: also compatible with USB3FTV (type A) & USBBFTV (type B) square flange receptacles:
USB3FTV2XX *(see page 95)*
USBFTV2XX *(see page 108)*

■ **Panel gasket for square flange receptacle (thickness: 0,8 mm [.031]):**

**Part number: JE15**

Amphenol

# Special USB adaptor

**For Military & Commercial Aeronautics**

NEW

At the rear of the adaptor, the connection is for connectors type EN3646.

## Adaptor USB only

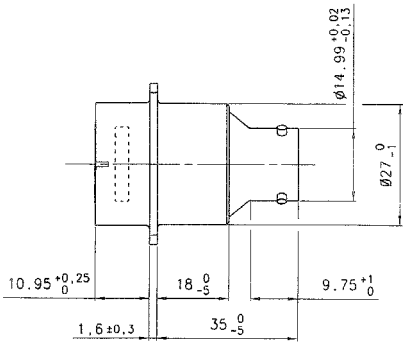


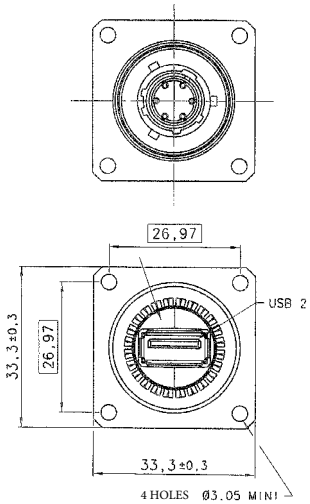


| Part number | Plating | Coding | P/n |
|---|---|---|---|
| | Black anodized | N | **35608** |
| | Black anodized | W | **35615** |

## Adaptor USB + Self Closing Cap (SCC)

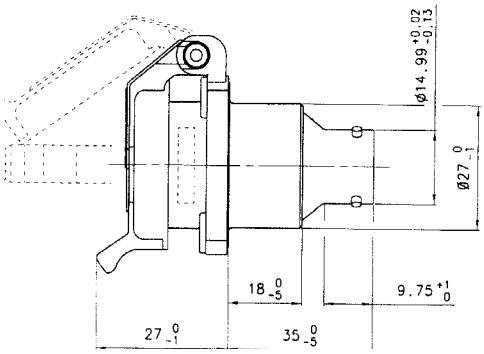


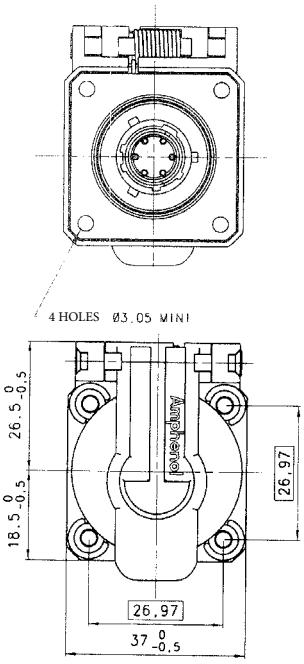


| Part number | Plating | Coding | P/n |
|---|---|---|---|
| | Black anodized | N | **35616** |
| | Black anodized | W | **35617** |

**For all options:**

**10-6 Male contact EN3155**

**Coding N**

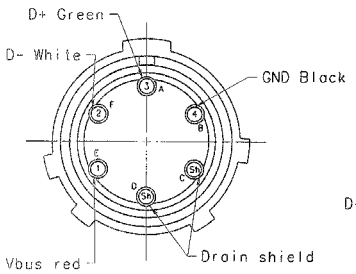


**Coding W**

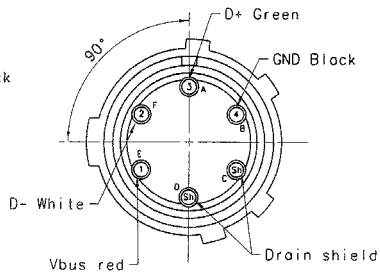


**Panel drilling**

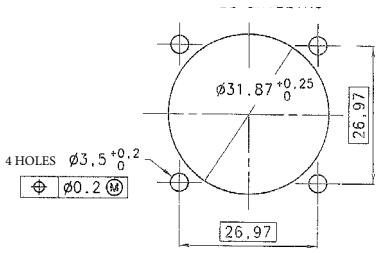

# Rugged USB Solutions

## Cable assemblies

Table of contents


NEW USB-A Field : plastic & neoprene solutions with self closing cap ..... 122

NEW USB-B Field : Plastic shell - Overmolded cordset plug ..... 125

# USB-A Field

## Rugged USB-A plastic & neoprene solutions with Self Closing Cap

NEW

Amphenol USB-A Field - Plastic & Neoprene versions are rugged USB interconnect solutions fitted to be used in any industrial harsh environment.
The Self Closing Cap enclosure enables to protect the USB-A Field receptacle from dust and fluids when the plug or the USB Memory key are unmatted.

### Applications

- Access point
- Telecom equipments
- Video control
- Robotics
- Industrial process control
- CNC machines
- Special machines

### Main characteristics

- Sealing level:
  - Matted condition with plug or rugged USB Memory Key : IP67
  - Receptacle with Self Closing Cap alone : IP54
- Mating cycles: 500
- Push-pull mating
- Neoprene shells for plug & USB Keys
- Data transmission: USB specification 2.0
- Data rate: up to 480 Mb/s for high speed USB
- Temperature range: -40°C / +85°C
- RoHS compliant

### Memory Key with soft neoprene shell

IP67 when matted on receptacle or with neoprene protective cape

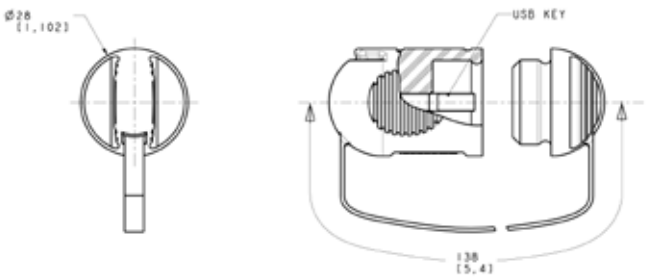


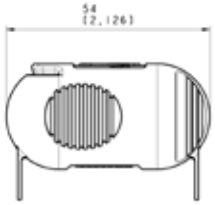


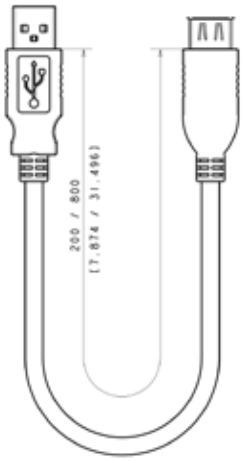


| Part number | | Capacity (Mb) |
|---|---|---|
| | USBAPKEY 4096 | 4096 |
| | USBAPKEY 8192 | 8192 |

Amphenol

## Plug with soft neoprene shell

**Part number:**
**USBAP 6 xxxA**
*with USB-A plug*

**IP67 when matted on receptacle**

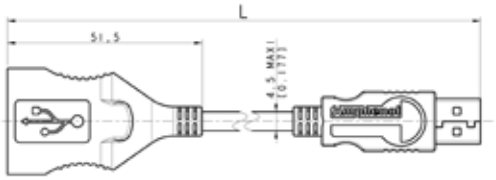


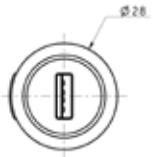

**Part number:**
**USBAP 6 xxx**
*Open*

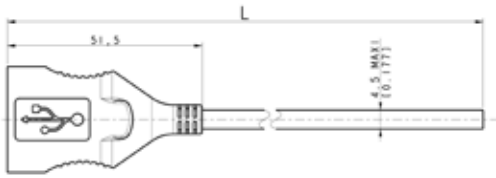

| | | Extremity type *Open or USB-A* | L $^{+5cm}_{0}$ *Meters* | L $^{+0.164ft}_{0}$ *Feet* |
|---|---|---|---|---|
| **Part number** | **USBAP6 05 OPEN** | Open | 0.5 | 1.64 |
| | **USBAP6 05A** | USB-A | 0.5 | 1.64 |
| | **USBAP6 10 OPEN** | Open | 1.0 | 3.28 |
| | **USBAP6 10A** | USB-A | 1.0 | 3.28 |
| | **USBAP6 15 OPEN** | OPEN | 1.5 | 4.92 |
| | **USBAP6 15A** | USB-A | 1.5 | 4.92 |
| | **USBAP6 20 OPEN** | OPEN | 2.0 | 6.56 |
| | **USBAP6 20A** | USB-A | 2.0 | 6.56 |

## Square flange receptacle

**IP54 when alone**

**Part number:**
**USBAPSCC 21**

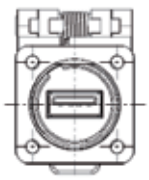


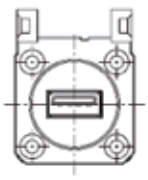


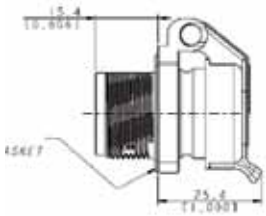


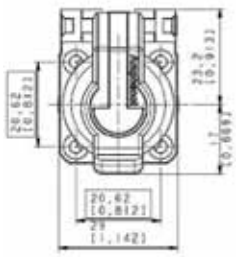

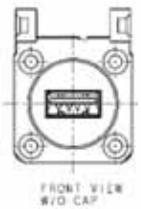


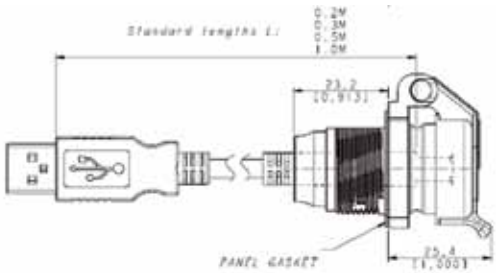


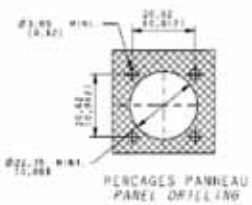


| | | Cordset length *Meters* | Cordset length *Feet* |
|---|---|---|---|
| **Part number** | **USBAPSCC 22 02A** | 0.2 | 0.66 |
| | **USBAPSCC 22 03A** | 0.3 | 0.98 |
| | **USBAPSCC 22 05A** | 0.5 | 1.65 |
| | **USBAPSCC 22 10A** | 1.0 | 3.28 |

## Jam nut receptacle

**Part number:**
**USBAPSCC 71**

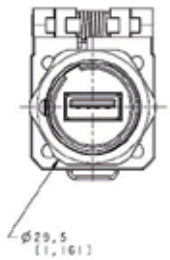


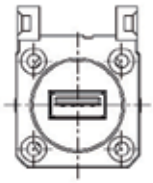

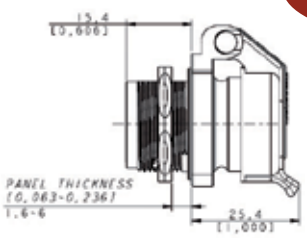


IP54
when alone

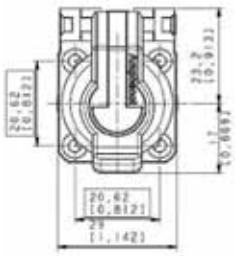

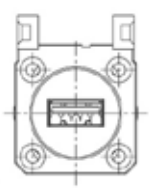

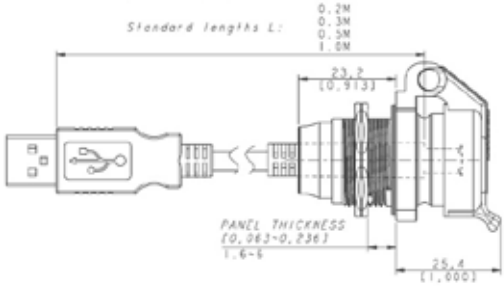


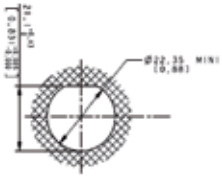


| | | Cordset length *Meters* | Cordset length *Feet* |
|---|---|---|---|
| **Part number** | **USBAPSCC 72 02A** | 0.2 | 0.66 |
| | **USBAPSCC 72 03A** | 0.3 | 0.98 |
| | **USBAPSCC 72 05A** | 0.5 | 1.65 |
| | **USBAPSCC 72 10A** | 1.0 | 3.28 |

## USB plastic - IP67 cap (for square flange receptacle only)

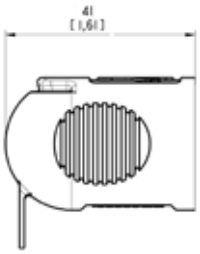


**Part number:**
**USBAP IP67 CAP**

Cap lanyard fixed by a screw
(for square flange receptacle only)

**How to unplug:**

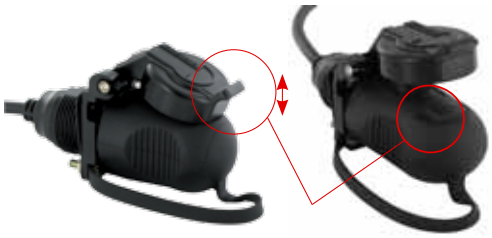

**Locking Shape:**
Push-up the self-closing cap before removing the USBKey, Plug or IP67 protective cap from the receptacle

# USB-B Field

## Plastic shell - Overmolded cordset plug

**IP68 SEALED USB-B CONNECTION SYSTEM**

- Plastic shells
- Thread coupling
- Overmolded plug cordset: male sealed USB-B plug to standard USB-A plug
- Available cordset lengths: 1m and 2m - For other lengths please contact us
- Rear mount jam nut receptacle with 50mm flying lead + 5-way connector back termination. Panel gasket included.
- Temperature range: -20°C +80°C

Applications

■ Embedded computers ■ Data transfer ■ Numerical control machine

### Overmolded plug cordset : male sealed USB-B plug, standard USB-A plug.

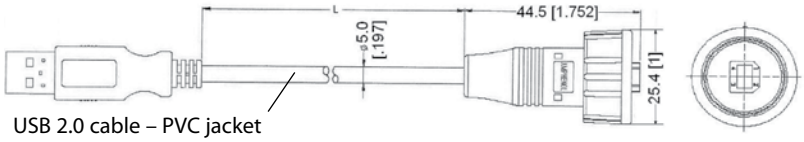


| Part number | | Length |
|---|---|---|
| | USBBF6100 | 1000±50mm [39.37±1.97] |
| | USBBF6200 | 2000±50mm [78.74±1.97] |

### Receptacle - Female USB-B

Part number :
**USBBF7**

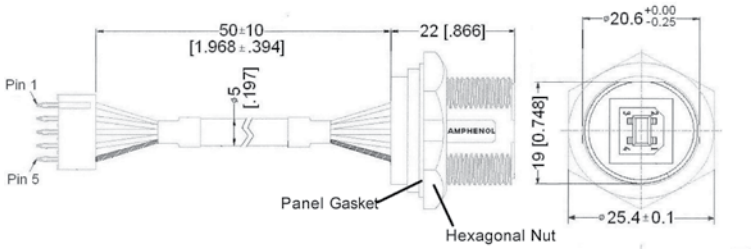


**JWT CONNECTOR – PITCH 2.5MM**

JWT 1 = USB1 = RED (AWG 24)
JWT 2 = USB2 = WHITE (AWG 28)
JWT 3 = USB3 = GREEN (AWG 28)
JWT 4 = USB4 = BLACK (AWG 24)
JWT 5 = USB Shield

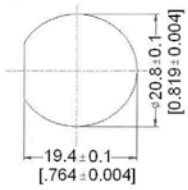


Panel Drilling

### Receptacle cap

Part number:
**USBBFC7**

Amphenol

## NOTES

# Rugged USB Solutions

## Rugged electronics

Amphenol

## Table of contents


NEW Reinforced USBF TV Memory Keys ..... 128
Reinforced USB Memory Keys ..... 129
NEW Reinforced USB amplifier ..... 130

# Reinforced USBF TV Memory Keys

**Derived from MIL-DTL-38999 series III specification • from 4 GB to 256 GB**

NEW

ROHS COMPLIANT N

We provide reinforced USB memory keys available in different capacities. They can be used ONLY with our USBFTV series receptacles. When mated on the receptacle, the system is IP68 and allows data transmission in harsh environments.

## Environmental protection

- Sealing: IP68 (when mated)
- Salt spray: 48 h with nickel plating (ROHS)
  > 500 h with olive drab cadmium
- Vibrations: MIL-STD-810F method 514.5 fig 514.5.C cat 14
- Temperature range: - 40°C / +85°C (MIL-STD-810F)
- Data transmission during vibration & temperature tests

**IMPORTANT NOTE**

USBFTV memory key to be used with USBFTV receptacles (3.0 and 2.0)

▶ *see page 86 for 3.0 & page 97 for 2.0*

## Other features

- Type: USB2.0 (capacity 4 GB)
  USB3.0 (capacities 8 GB to 256 GB)
- Voltage: 5V DC - 500 mA max

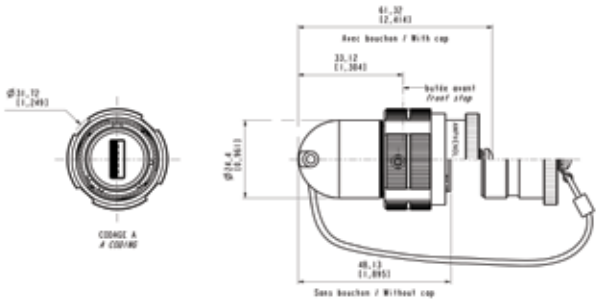

Memory size **from 4 to 64GB**

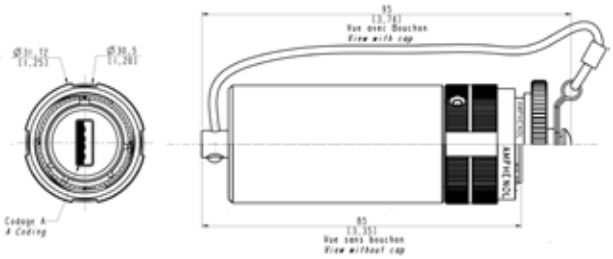

Memory size of **256GB**

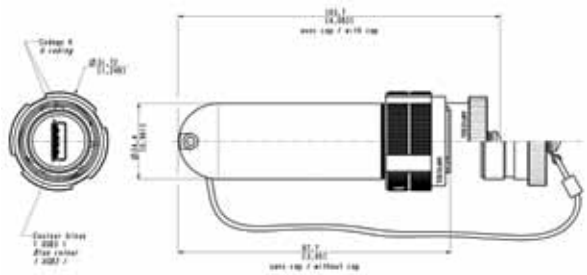

Memory size of **128GB**

**USB cordset is included with each memory key**

**Note:** Our rugged memory keys are sold under standard electronic manufacturer configuration for data storage.
If, for your own usage, you need to re-configurate the electronic (under Linux for example), it will be under customer responsibility. Amphenol is not responsible for any wrong doing or misguided use of the product by its customers.
Under request, we can provide you with electronic manufacturer details so you can check if their specific configuration will work with the electronic (please specify memory capacity).
Amphenol can also study the integration of electronic selected by a customer. In order to do so, we need to receive a sample of the USB memory stick so we can study its integration into our existing concept or adapt it.
**Please send your requests to contact@usbfield.com**

## Definition of part number

| | | | | |
|---|---|---|---|---|
| **USBFTV KEY 6**<br>FOR USB 2.0 VERSION | | **4096**<br>CAPACITY FOR USBFTV KEY:<br>4096 | | |
| | **A** | | **N** | **CAP** |
| **USB3FTV KEY 6**<br>FOR USB 3.0 VERSION<br>Note: USB3.0 is compatible with USB2.0 | CODING POSITION:<br>**A:** coding A<br>**B:** coding B<br>* The coding can be changed on the receptacle counter part using our tool USBFODE | **64**<br>CAPACITY FOR USB3FTV KEY:<br>8 \| 16 \| 32 \| 64 \| 128 \| 256<br>Other capacity, please consult us at **contact@usbfield.com** | PLATING:<br>**"N":** nickel plating<br>**"G":** olive drab cadmium<br>**NB:** please check the plating of your USBFTV receptacle | **Cap:** with cap<br>**Blank:** without cap |

EXAMPLE: **USBFTVKEY6A4096N:** USBFTV KEY – CODING A – CAPACITY OF 4096MB – NICKEL PLATING
EXAMPLE: **USB3FTVKEY6A64GCAP:** USBFTV KEY – CODING A – CAPACITY OF 64GB – OLIVE DRAB CADMIUM PLATING - PROTECTIVE CAP
***NB***: PRODUCT SUGGESTED TO ELECTRONIC CHANGES DEPENDING ON OUR ELECTRONIC SUPPLIERS, NEW CAPACITIES, OBSOLESCENCE

# Reinforced USB Memory Keys

We provide reinforced USB memory keys available in different capacities. When mated, the system is IP68. Shells are metallic with 1/4 turn bayonet coupling. It provides a full protection of the data stored into the keys when the cap is closed. For full data protection during data transfers, check our USBFTV memory keys.

**IMPORTANT NOTE**
Compatible with any standard USB port

### Environmental protection

- Sealing: IP68 (when closed)
- Salt spray: 48 h with nickel plating (ROHS)
  > 96 h with black coating (ROHS)
  > 500 h with olive drab cadmium
- Vibrations: MIL-STD-810F method 514.5 fig 514.5.C cat 14
- Temperature range: - 40°C / +85°C (MIL-STD-810F)

### Other features

- Type: USB2.0
- Voltage: 5V DC - 500 mA max
- Electromagnetic compatibility: 89/336/EEC and Part 15 Class B

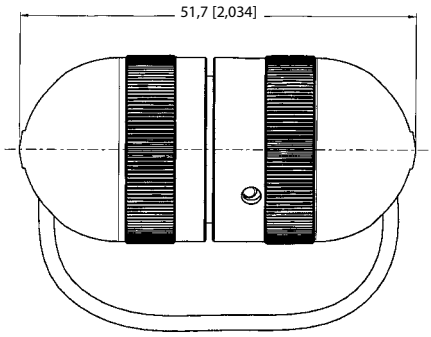


Up to memory size 8GB

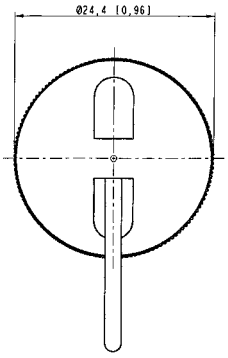


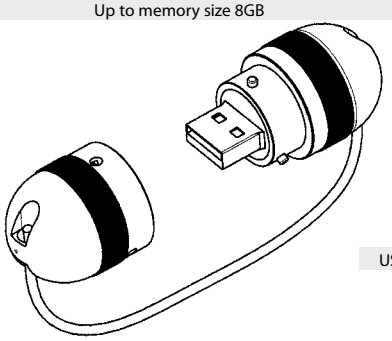

Rugged Metallic USB KEY with CAP SEALING: IP 67

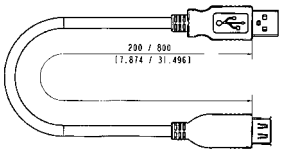


USB cordset is included with each memory key

**Note:** Our rugged memory keys are sold under standard electronic manufacturer configuration for data storage.
If, for your own usage, you need to re-configurate the electronic (under Linux for example), it will be under customer responsibility.
Amphenol is not responsible for any wrong doing or misguided use of the product by its customers. Under request, we can provide you with electronic manufacturer details so you can check if their specific configuration will work with the electronic (please specify memory capacity).
Amphenol can also study the integration of electronic selected by a customer. In order to do so, we need to received a sample of the USB memory stick so we can study its integration into our existing concept or adapt it.
**Please send your requests to contact@usbfield.com**

## DEFINITION OF PART NUMBER

| USBF KEY | 4096 | N |
|---|---|---|
| Beginning of every USB Key part number. Remains unchanged. | **Capacity of your USBF Key:**<br>4096 \| 8192<br>Other capacity, please consult us at **contact@rjfield.com** | **Shell finish:**<br>**N:** Nickel<br>**G:** Green<br>**B:** Black |

* GT: Fast Data Transfer
EXAMPLE: **USBFKEY4096N:** USB MEMORY KEY - CAPACITY OF4096MB - SHELL FINISH: NICKEL
EXAMPLE: **USBFKEY8192G:** USB MEMORY KEY - CAPACITY OF 8192MB - SHELL FINISH: GREEN

# Reinforced USB Amplifier

NEW

ROHS COMPLIANT N

We provide USB amplifier if your need exceeds 5 meters up to 10 meters (16.40 up to 32.80 ft].

**This product is subject to custom design.** For more information, please consult us.

## Jam nut receptacle Ampli with cable reinforced PU jacket open

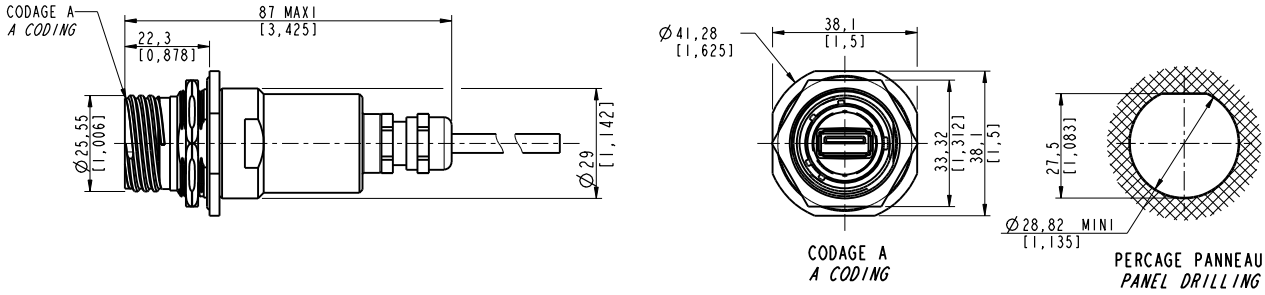


Amphenol

### USB amplifier selection guide

**Define your own solution by selecting options in the scheme below**

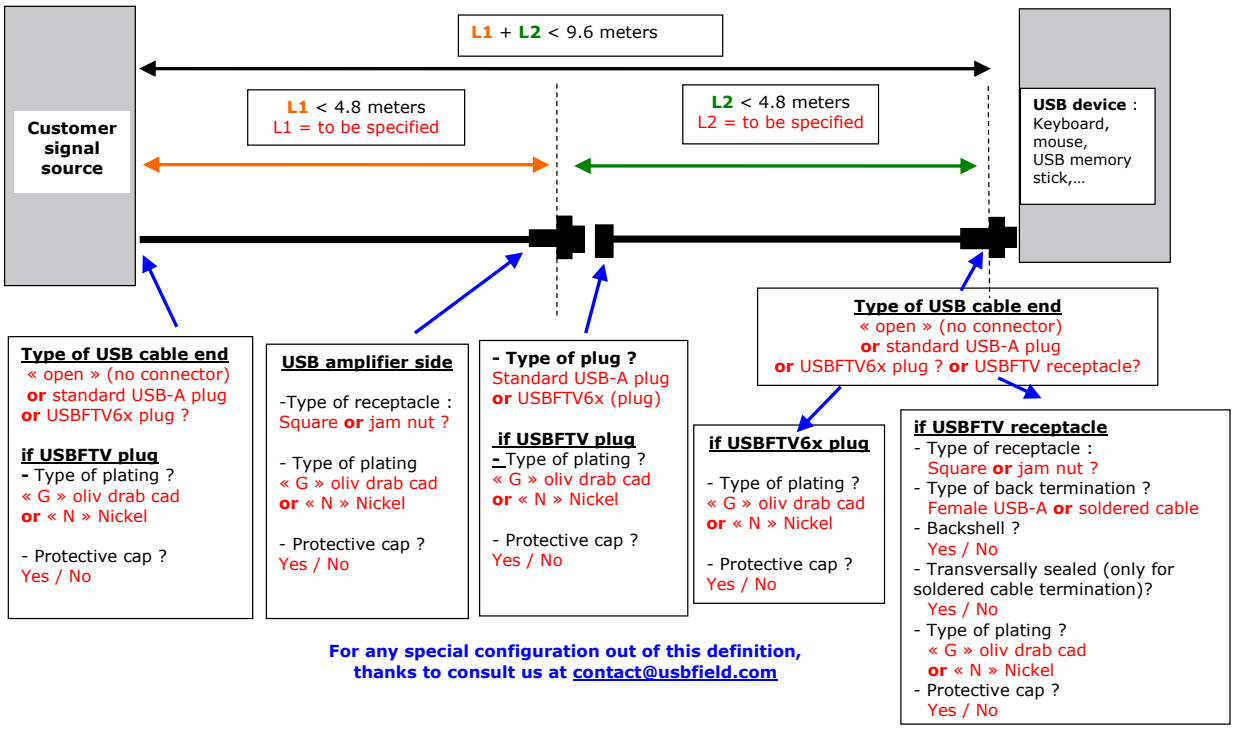


**For any special configuration out of this definition, thanks to consult us at contact@usbfield.com**

# Rugged ATEX Zone 2 solutions

## Table of contents


RJFTVX, USBFTVX, RJ11FTVX ..... 132

RJSPCEX ATEX ZONE 2 Rugged & IP68 sealed Ethernet switch ..... 138

# RJFTVX, USBFTVX, RJ11FTVX

RJ45, USB, RJ11/12 explosion proof solutions for **Zone 2**

Amphenol Atex Field Bus range is designed for device group II category 3G. According to EN60079-15 it may be operated within zone 2 and class I, Division 2, as low power non sparking connectors.

## RJFTVX • Rugged and sealed RJ45 connector

RJFTVX allows you to use an Ethernet Class D / Cat. 5e connection for 10 BaseT, 100 BaseTx or 1000 BaseT networks in ATEX zone 2 environments. With the patented RJStop system you can use a standard RJ45 cordset in a metallic plug which will protect it from shocks, dust and fluids. RJFTVX features the same main characteristics than RJFTV series (see page 26).

### Plug

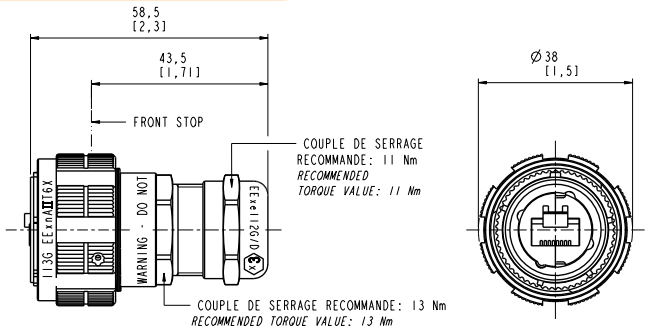


| Part number | Plating | Plug | IP68 metallic cap |
|---|---|---|---|
| | Nickel | **RJFTVX6MN** | **RJFTVC6N** |
| | Olive drab cadmium | **RJFTVX6MG** | **RJFTVC6G** |

### Characteristics

| | |
|---|---|
| Ex marking | II3G ExnAIIT6 X |
| Operating temperature range | -40°C / +60°C |
| Voltage | 60 Veff max |
| Power | 20 W max |
| Outside cable diameter | 6mm to 12mm |
| Sealing | IP68 |
| Data transmission | 10 BaseT, 100 BaseTX & 1000 BaseT networks. Cat. 5e per TIA/EIA 568B & Class D per ISO/IEC 11801 |

### Square flange receptacle

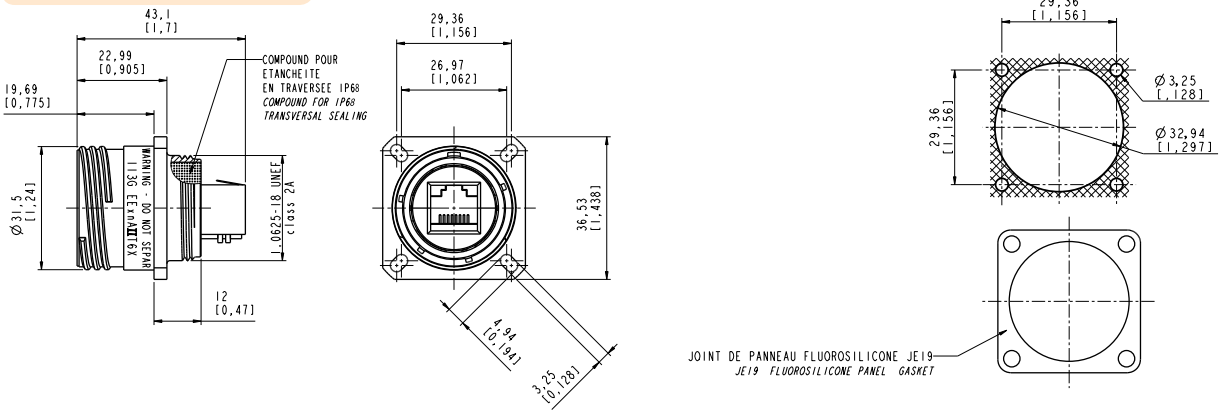


| Part number | Plating | Receptacle, RJ45 back termination, coding A | Receptacle cap |
|---|---|---|---|
| | Nickel | **RJFTVX2SA1N** | **RJFTVC2N** |
| | Olive drab cadmium | **RJFTVX2SA1G** | **RJFTVC2G** |

## Jam nut receptacle

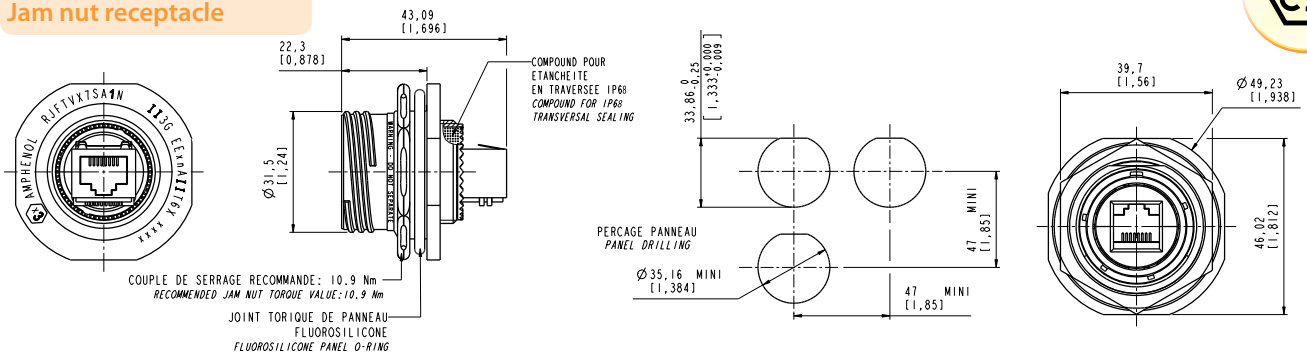


| Part number | Plating | Receptacle, RJ45 back termination, coding A | IP68 metallic cap |
|---|---|---|---|
| | Nickel | **RJFTVX7SA1N** | **RJFTVC7N** |
| | Olive drab cadmium | **RJFTVX7SA1G** | **RJFTVC7G** |

**REMARK:** As receptacles are compounded (IP68 transversally sealing), coding position has to be specified in the part number : A (standard), B, C or D

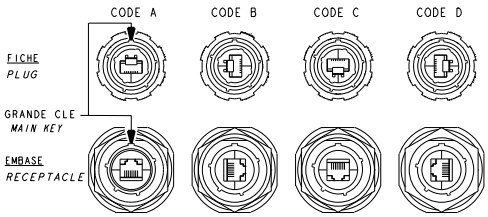


**Receptacles can be provided with RJ45 cordsets.**
**There are 4 standard lengths as described hereunder *(with coding "A")*:**

| Part number | Nickel plating | Olive drab cadmium plating | RJ45 cordset length *Meters* |
|---|---|---|---|
| | RJFTVX2SA2**N**03100BTX | RJFTVX2SA2**G**03100BTX | 0.3 |
| | RJFTVX2SA2**N**05100BTX | RJFTVX2SA2**G**05100BTX | 0.5 |
| | RJFTVX2SA2**N**10100BTX | RJFTVX2SA2**G**10100BTX | 1.0 |
| | RJFTVX2SA2**N**15100BTX | RJFTVX2SA2**G**15100BTX | 1.5 |

### Part number code

| | | | | | | |
|---|---|---|---|---|---|---|
| **Series**<br>**RJ Field TV** | **RJF TVX** | **7S** | **A** | **2** | **N** | **05 100BTX** |
| **Shell Type**<br>**2S:** Square flange receptacle<br>**7S:** Jam nut receptacle<br>**6M:** Plug | | | | | | |
| **Coding**<br>**"A" (Standard) or "B", "C", "D"** | | | | | | |
| **Back Terminations (for receptacles only)**<br>**1:** Female RJ45<br>**2:** RJ45 cordset | | | | | | |
| **Shell Material and Finish:**<br>**N:** Nickel<br>**G:** Olive drab cadmium | | | | | | |
| **Cordset length (for receptacles with "2" back termination only)**<br>**03 100BTX:**30 cm [11.81 inches]<br>**05 100 BTX:**50 cm [19.68 inches]<br>**10 100 BTX:**1 meter [39.37 inches]<br>**15 100BTX:** 1,5 meters [59.04 inches] | | | | | | |

## USBFTVX • Rugged and sealed USB connector

With USBFTVX, you can insert a standard USB 2.0 cordset into a metallic plug which will protect it from shocks, dust and fluids. This range is fitted to be used in Atex zone 2 environments.
This metallic plug is connected into a receptacle, using a Tri Start thread coupling mechanism (MIL-DTL-38999 series III type) with anti-decoupling device for high vibrations.
USBFTVX features the same main characteristics than USBFTV series (see page 76).

### Characteristics

| | |
|---|---|
| Ex marking | II3G ExnAIIT6 X |
| Operating temperature range | -40°C / +70°C |
| Voltage | 60 Veff max |
| Power | 20 W max |
| Outside cable diameter | 4mm to 6mm |
| Sealing | IP68 |
| Data transmission | USB 2.0 up to 480 Mb/s |

### Plug

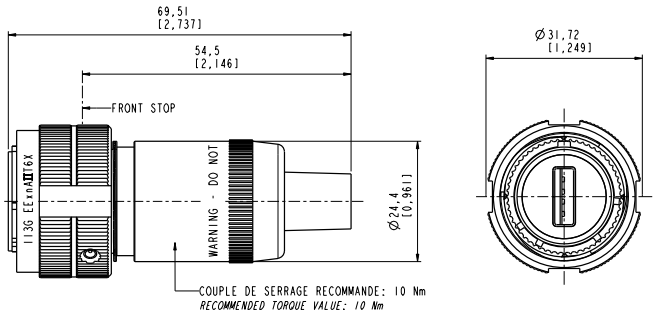


| Part number | Plating | Plug | IP68 metallic cap |
|---|---|---|---|
| | Nickel | **USBFTVX6N** | **USBFTVC6N** |
| | Olive drab cadmium | **USBFTVX6G** | **USBFTVC6G** |

### Square flange receptacle

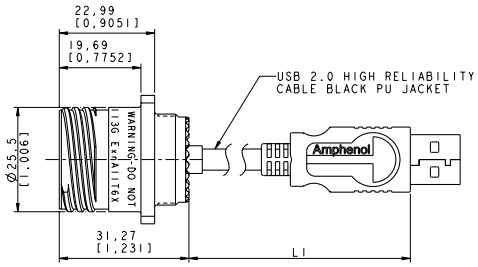


Cable end Type "A" (Standard USB "A" Plug)

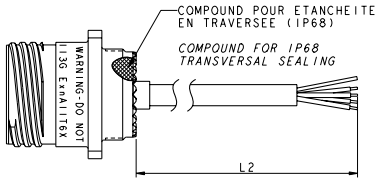


Cable end Type "OPEN" (No connector)

## Jam nut receptacle

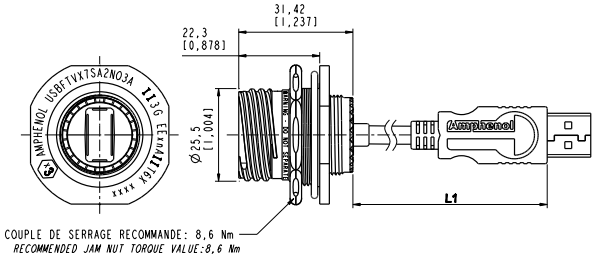


Cable end Type "A" (Standard USB "A" Plug)

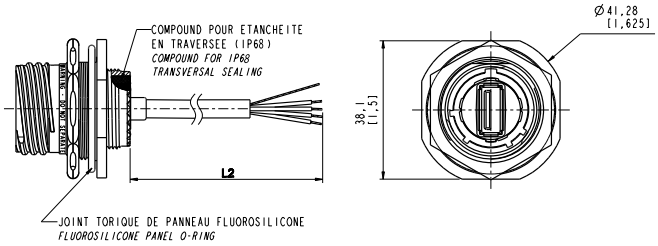


Cable end Type "OPEN" (No connector)

### Part number code

| | | | | | | | |
|---|---|---|---|---|---|---|---|
| **Series**<br>**USB Field TV** | **USBF TVX** | **2S** | **A** | **2** | **N** | **03** | **A** |
| **Shell Type**<br>**2S :** Square flange receptacle<br>**7S:** Jam nut receptacle | | | | | | | |
| **Coding**<br>**"A" (Standard) or "B"** | | | | | | | |
| **Back Terminations**<br>**2:** Rugged USB cable | | | | | | | |
| **Shells Plating**<br>**N:** Nickel<br>**G:** Olive drab cadmium plating | | | | | | | |
| **USB cable length**<br>**03:** 30 cm [11.81 inches]<br>**05:** 50 cm [19.68 inches]<br>**10:** 1 meter [39.37 inches] | | | | | | | |
| **USB cable end**<br>**A:** Standard USB-A plug<br>**OPEN:** Open cable (no connector) | | | | | | | |

### CAPS for receptacles :

| | Plating | Cap for square flange receptacle | Cap for jam nut receptacle |
|---|---|---|---|
| **Part number** | Nickel | **USBFTVC2N** | **USBFTVC7N** |
| | Olive drab cadmium | **USBFTVC2G** | **USBFTVC7G** |

## RJ11FTVX • Rugged and sealed RJ11/12 connector

RJ11FTVX allows you to use a standard phone RJ11/RJ12 connection in Atex zone 2 environments.
With the patented RJStop® system you can use a standard RJ11 / RJ12 cordset in a metallic plug which will protect it from shocks, dust and fluids.

### Characteristics

| | |
|---|---|
| Ex marking | II3G ExnAIIT6 X |
| Operating temperature range | -40°C / +60°C |
| Voltage | 60 Veff max |
| Power | 20 W max |
| Outside cable diameter | 4mm to 5.5mm |
| Sealing | IP68 |
| Coupling mechanism | Tri Star thread with anti-decoupling device (MIL-DTL-38999 series III) |
| Mating cycles | 500 min |
| Salt spray | 48h with nickel plating / 500 h with oliv drab cadmium plating |
| Coding | 4 mechanical user-defined coding / Polarization settings (insert rotation) |
| Fire retardant / Low smoke | UL94 V0 and NF16 101 & 16 102 |
| R11 cordset retention in the plug | 100 N in the Axis |

### Plug

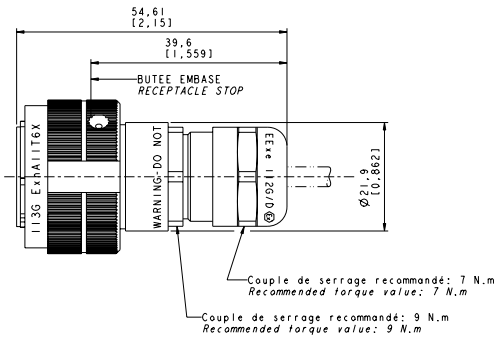


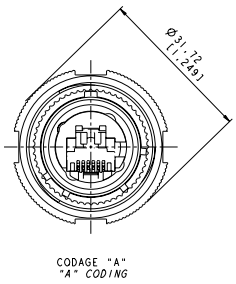


| Part number | Plating | Plug | Cap |
|---|---|---|---|
| | Nickel | **RJ11FTVX6MN** | **RJ11FTVC6N** |
| | Olive drab cadmium | **RJ11FTVX6MG** | **RJ11FTVC6G** |

## Square flange receptacle

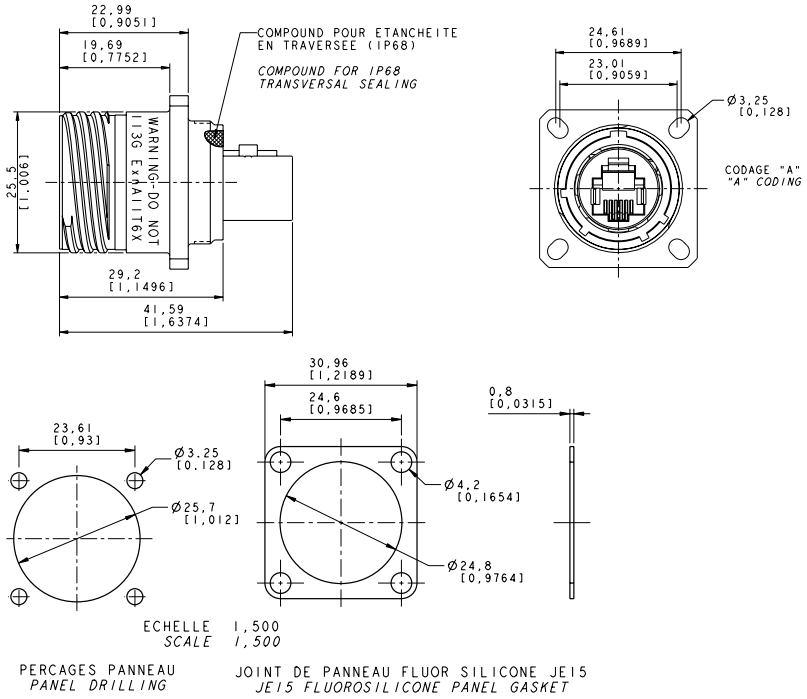


| Part number | Plating | Receptacle - Female RJ11 back termination - Coding A | Receptacle cap |
|---|---|---|---|
| | Nickel | **RJ11FTVX2SA1N** | **RJ11FTVC2N** |
| | Olive drab cadmium | **RJ11FTVX2SA1G** | **RJ11FTVC2G** |

## Jam nut receptacle

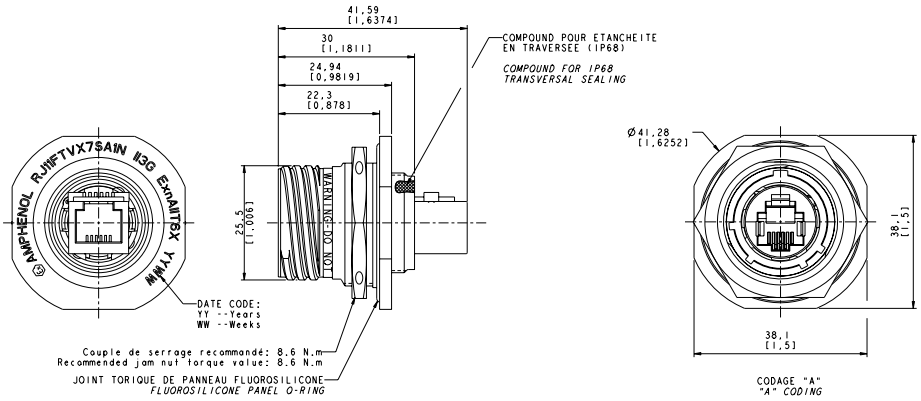


| Part number | Plating | Receptacle - Female RJ11 back termination - Coding A | Receptacle cap |
|---|---|---|---|
| | Nickel | **RJ11FTVX7SA1N** | **RJ11FTVC7N** |
| | Olive drab cadmium | **RJ11FTVX7SA1G** | **RJ11FTVC7G** |

**REMARK:** As receptacles are compounded (IP68 transversally sealing), coding position has to be specified in the part number : A (standard), B, C or D
*(connection side views)*

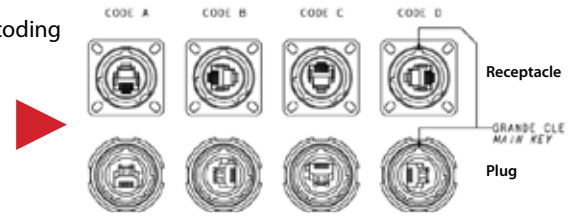

# RJSPCEX ATEX ZONE 2 RUGGED & IP68

## Sealed ethernet switch

This Ethernet Switch is a combination of rugged packaging with locking device for Zone 2 hazardous location, with fault-tolerant network redundancy.

### Industrial Applications

- Oil & Gas
- Process Control
- Factory Automation

### Outstanding features

- IP65/68 Sealing
- ATEX Zone 2II3G ExnAII T4X (EN60079-15 & EN60079-0)
- Plug and Play simplicity
- Ring redundancy
- Operating temperature: -40°F to 170°F (-40°C to +75°C)

### Key Features

- Ring Switch Networking Features (managed features available!)
  - Real-Time Ring for ultra-fast fault-tolerant loops
    - Recovery time of 30 ms + 5 ms per hop!
  - Modbus monitoring over Ethernet
    - Ideal for deterministic systems and PLCs
  - Real-time traffic prioritization (QoS and CoS)
    - Assure delivery of real-time data
    - Improve network utilization
    - User settable priority assignments
  - Advanced switch features
    - User configurable port settings
    - Port mirroring for traffic diagnostics
    - Pre-configurable for Plug-And-Play simplicity

### P/N: RJSPC-EX-5ES1-PLG-CAPS

**Note: this part number includes:**

- One ATEX Zone 2 IP68 Plug and Play Ethernet switch equipped with caps on Ethernet connectors
- One power plug equipped with anti decoupling nut
- Five Ethernet plugs equipped with anti decoupling spring

### P/N: RJSPC-EX-5RS1-PLG-CAPS

**Note: this part number includes:**

- One ATEX Zone 2 IP68 RING Ethernet switch equipped with caps on Ethernet connectors
- One power plug equipped with anti decoupling nut
- Five Ethernet plugs equipped with anti decoupling spring

### Description (example for Ring model)

- Waterproof IP68 Rating (NEMA 6)
- Reduced Installation Costs with the patented RJStop® system
- Use any standard RJ45 cordset
- Rugged Enclosure in Polyester reinforced with 30% glass fiber
- Redundant power inputs with surge/spike protection
- Ultra reliable 1,000,000 hours Mean Time Between Failure *(MTBF)*
- Zone 2 hazardous location (models RJSPC-EX)

1. LEDs indicating activity, link status, datarate (10/100 Mbps)
2. LED indicating ring status
3. 5 rugged IP68 RJ Field Ethernet ports
4. Real-time ring feature
5. IP68 polyester enclosure reinforced with glass fiber
6. OK power & ring status
7. LEDs indicating power
8. Anti-decoupling nut for power plug
9. Anti-decoupling spring for ethernet plugs

# Other rugged solutions

# Field installable

## Table of contents


FWFTV ..... 140
Self Closing Cap for IEEE1394 receptacles ..... 143
RJ11F ..... 144
NEW Special RJ11 Military & Commercial Aeronautics ..... 146
MTRJF TV ..... 148
LC Field ..... 150

# FWF TV

## IEEE 1394A Connection System for Harsh Environments

With FW Field, you can insert a standard IEEE1394A cordset into a metallic plug which will protect it from shocks, dust and fluids.
**No hazardous on-field cabling and grounding!**
This metallic plug is connected into a receptacle, using a Tri Start Thread coupling mechanism (MIL-DTL-38999 series III type) with anti-decoupling device for high vibrations.

### Applications

- Embedded Computers
- Video
- Railways
- Battelfield Communication Systems
- Naval & Shipboard Systems
- Robotics & Automation
- Process Control
- Rugged Communications

### Main characteristics

- No assembly tools required
- Sealed against fluids and dusts (IP68)
- No time-consuming in-field cabling operation necessary
- **Tri-start thread coupling mechanism (MIL-DTL-38999 series III type) with anti-decoupling device**
- FW plug retention in the receptacle: 100 N in the axis
- Mating cycles: 500 minimum
- Improved EMI protection

### Environmental Protection

- Sealing (mated): IP68 (Temporary immersion - 1 meter up to 30 minutes)
- Salt Spray: 48 h with Nickel plating
  > 500 h with Olive Drab Cadmium
- Fire Retardant / Low Smoke: UL94 V0 and NF F 16 101 & 16 102
- Vibrations: 10 – 500 Hz, 10 g, 3 axes: no discontinuity > 1micro s
- Shocks: IK06: weight of 250 g drop from 40 cm [15.75 in] onto connectors (mated pair)
- Humidity: 21 days, 43°C, 98% humidity
- Temperature Range: - 40°C / +85°C

### Data Transmission

IEEE 1394a-2000
400 Mbits/second over 4.5 meters

### Part Number Code

| | | | | |
|---|---|---|---|---|
| **Series**<br>**IEEE1394 Field TV** | **FWF TV** | **2** | **1** | **G** |
| **Shell Type**<br>**6:** Plug<br>**2:** Square Flange Receptacle<br>**2PE:** Square flange receptacle with metal backshell *(type 1)* & with metal backshell + plastic gland *(type 2)*<br>**7:** Jam Nut Receptacle<br>**7PE:** Jam nut receptacle with metal backshell *(type 1)* & with metal backshell + plastic gland *(type 2)* | | | | |
| **Back Terminations** *(Receptacles only)*<br>**1:** IEEE 1394 receptacle<br>**2:** Solder Board (6 tinned holes) | | | | |
| **Shell Plating**<br>**N:** Nickel - ROHS Compliant<br>**G:** Olive Drab Cadmium | | | | |

*Examples:*
- Olive Drab Cadmium Plug: FWF TV 6G
- Olive Drab Cadmium Square Flange Receptacle, IEEE 1394 front & back: FWF TV 21G
- Olive Drab Cadmium Jam Nut Receptacle, IEEE 1394 front and back: FWF TV 71G
- Nickel Jam Nut Receptacle, solder board termination: FWF TV 72N

## Plug

■ Shell type 6

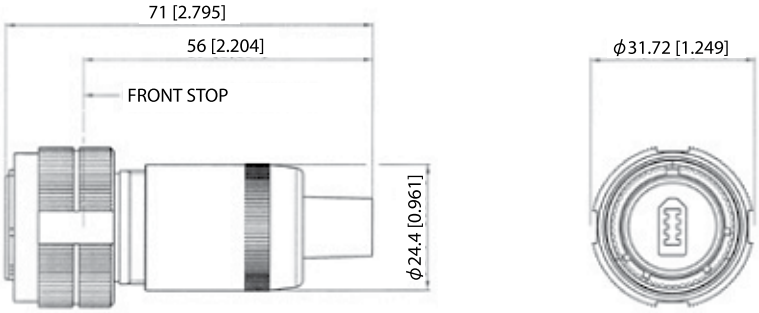


FWF TV 6 X

## Receptacles

■ Square flange receptacle
4 mounting holes: Shell type 2

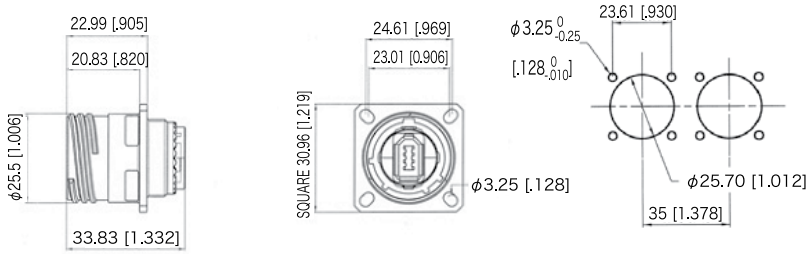


FWF TV 2 XX

Panel Drilling

■ Jam nut receptacle
Hexagonal Nut mounting: Shell type 7

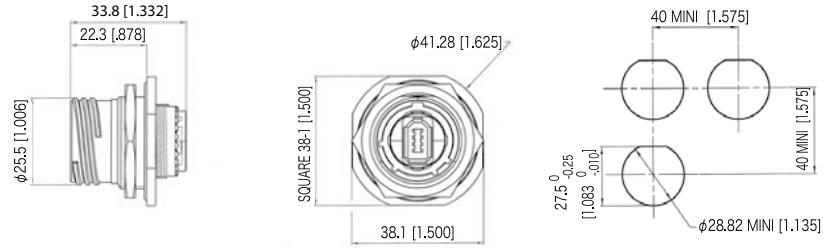


FWF TV 7 XX

Panel Drilling

■ Receptacles with backshell:
Shell type 2PE and 7PE

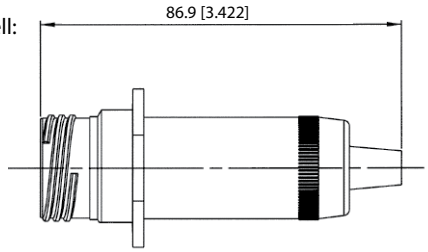


Backshell used with IEEE 1394
Receptacle with back-termination - (Type 1)
Non sealed version
Same panel drilling as FWFTV 2xx

FWF TV 2PE & 7PE Type 1

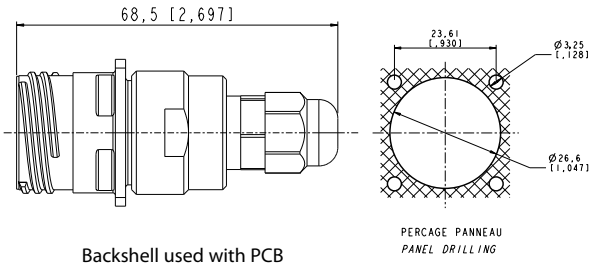


Backshell used with PCB
Receptacle with back-termination - (Type 2) )
Sealed version - IP67

FWF TV 2PE & 7PE Type 2

Panel Drilling *(for type 2 only)*

## Back Terminations

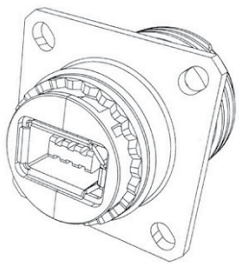

Type 1: IEEE 1394 Receptacle

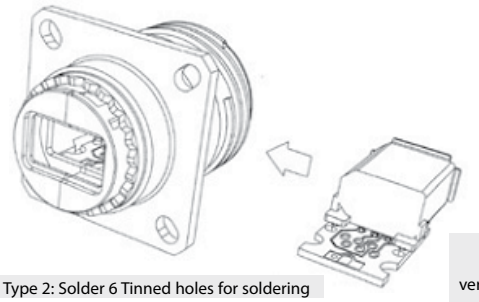

Type 2: Solder 6 Tinned holes for soldering

View of the PCB Type 2 version - with 6 tinned holes for solder termination

Amphenol

## Assembly Instructions

*Can be used with most IEEE 1394 cordset brands: No tools required!*

**Plug Assembly**

1. If a fully sealed (IP68) assembly is required: Install the white tape around the plug to cover the 4 holes of the overmolding. If there are no holes omit this step.

2. Insert the black O Ring around the front face of the IEEE 1394 plug. This O Ring will ensure the seal.

3. Insert the IEEE 1394 cordset into the metallic backshell.

4. Insert the retention spacer laterally onto the cable (this spacer is soft so as to adapt to various overmolding styles) and slide the IEEE 1394 plug into this retention spacer.

5. Insert the friction ring laterally onto the cable cordset.

6. Insert the IEEE 1394 plug into the metallic circular shell. Note at this step that the main key is used for polarization.

7. Screw the backshell on the plug body. A spanner may be required to fully close the backshell to the circular shell.

**Important Note:** The sealing of the connector is not done by the black retention spacers which are slotted, but rather by the front face O-Ring (Fig 2).

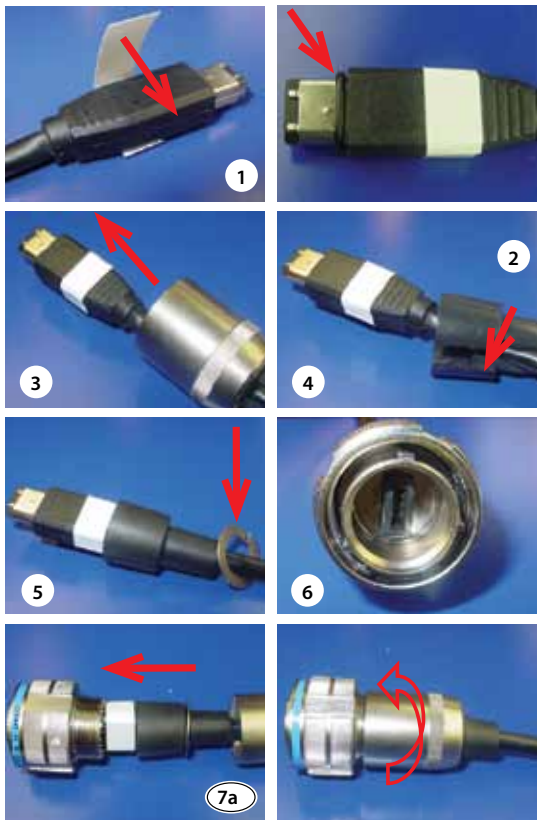


**Receptacle Assembly**

To Solder your cable onto the PCB:

1. Attach the 2 metallized plastic inserts around the PCB (Fig 1a & 1b).
2. Insert the IEEE 1394 module from the rear of the connector.

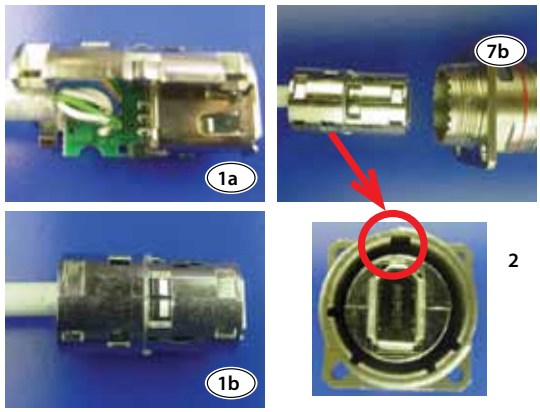


**Removing Modules**

1. Insert the removal tool FWF ODE from the front
2. Push the module back with thumb.

## Accessories

- **Metallic Caps**

| | FWF TVC | 2 | G |
|---|---|---|---|
| **Connector Type** | | | |
| **6:** | Plug | | |
| **2:** | Square Flange Receptacle | | |
| **7:** | Jam Nut Receptacle | | |
| **Shell plating** | | | |
| **N:** | Nickel - ROHS Compliant | | |
| **G:** | Olive Drab Cadmium | | |

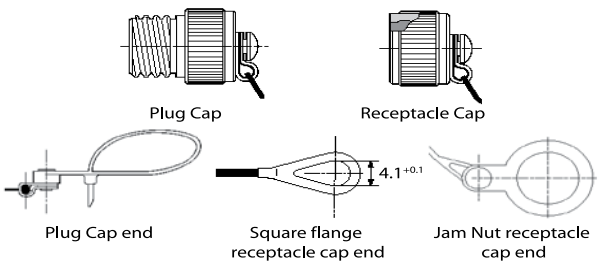


- **Panel Gasket** for square flange receptacle (Thickness: 0,8 mm [.031]): JE15

- **Receptacle Insert removal tool**: FWF ODE

# IEEE1394 Receptacle with Self Closing Cap

This Self Closing Cap automatically protects the IEEE1394 square flange receptacles (MIL-C-26482 type), protecting your system from dust and water projections. The same cap can be used to protect RJ45, USB and USBB receptacles. A spring automatically closes the upper part of the cap when either the RJ Field plug, RJ45 cordset, USB or IEEE1394 cordset, or USB key are removed from the receptacle.

## FWF 21 X SCC

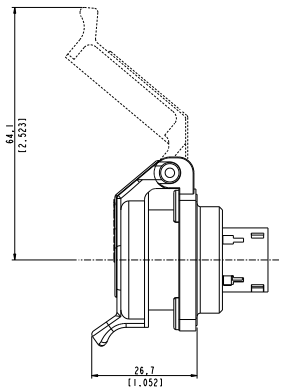


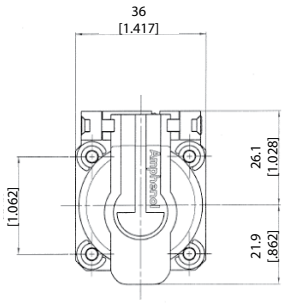


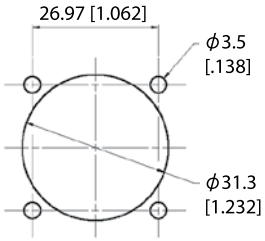


Panel Drilling

**Version IEEE1394**

| | | Plating | Metallized inserts (EMI) |
|---|---|---|---|
| **Part number *** | **FWF 21B SCC** | Black coated | No (blank insert) |
| | **FWF 21N SCC** | Nickel plated | Yes |
| | **FWF 21G SCC** | Olive drab cadmium plated | Yes |

* The part number includes the receptacle + the self closing cap

■ **Note**: Panel gasket with any of these receptacles: **JE18**

## RJF 21 X SCC, USBF 21 X SCC, USBBF 21 X SCC

**RJ45 version**

*(see page 25)*

**USB2.0 & 3.0 - A version**

*(see pages 94 & 107)*

**USB-B version**

*(see page 118)*

# RJ11F

## Rugged RJ11/RJ12 Connection System for Harsh Environment

RJ11Field allows you to use a standard phone RJ11 / RJ12 connection in harsh environments. With the patented RJStop® system you can use a standard RJ11 / RJ12 cordset in a metallic plug which will protect it from shocks, dust and fluids. No hazardous on-field cabling!

### Applications

- Industrial applications
- Battlefield communication

### Main characteristics

- **Bayonet coupling** ("Audible & Visual" coupling signal )
- **Robust metallic shells based on MIL-DTL-26482 H**
- 4 mechanical user-defined coding / Polarization settings (insert rotation)
- RJ11 cordset retention in the plug: 100 N in the axis
- Mating cycles: 500 min

### Environmental Protection

- Sealing: IP68
- Salt Spray: 48 h with Nickel plating
  > 96 h with black coating
  > 500 h with Oliv Drab Cadmium
- Fire Retardant / Low Smoke: UL94 V0 and NF F 16 101 & 16 102
- Vibrations: 10 – 500 Hz, 10 g, 3 axes: no discontinuity > 10 nano s.
- Shocks: IK06: weight of 250 g drop from 40 cm [15.75 in] onto connectors *(mated pair)*
- Humidity: 21 days, 43°C, 98% humidity
- Thermal Shock: 5 cycles at - 40°C / +100°C
- Temperature Range: - 40°C / +85°C

### Part Number Code

| | | | | |
|---|---|---|---|---|
| **Series**<br>RJ11Field | RJ11F | 2 | 2 | B |
| **Shell Type**<br>6: Plug, Plastic Gland<br>2: Square Flange Receptacle<br>7: Jam Nut Receptacle | | | | |
| **Back Terminations (For Receptacles only)**<br>1: Female RJ11<br>2: Solder (6 tinned holes) | | | | |
| **Shell Finishes**<br>B: Black Coating - ROHS Compliant<br>N: Nickel - ROHS Compliant<br>G: Olive Drab Cadmium | | | | |

*Examples:*
- Black Plug: RJ11F 6 B
- Black square flange receptacle, Female RJ11 Back termination: RJ11F 2 1 B
- Nickel Jam Nut Receptacle, solder termination: RJ11F 72 N

- Metallic cap

| | | | |
|---|---|---|---|
| | RJ11FC | 2 | B |
| **Connector Type**<br>6: Plug<br>2: Square Flange Receptacle<br>7: Jam Nut Receptacle | | | |
| **Finishes**<br>B: Black Coating - ROHS Compliant<br>N: Nickel - ROHS Compliant<br>G: Olive Drab Cadmium | | | |

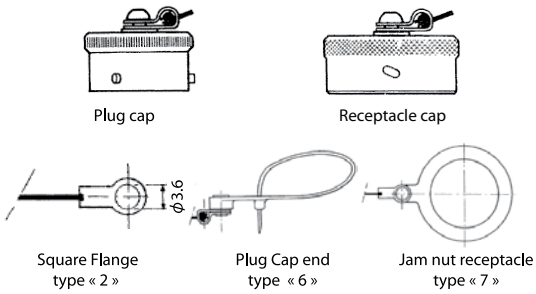


- Panel gasket for square flange « 2 » thickness: 0,6 mm
  P/N: JE 14

- Insert removal tool for receptacle and plug
  P/N = RJ11F ODE

## Plug

■ Shell type 6 with Plastic Gland

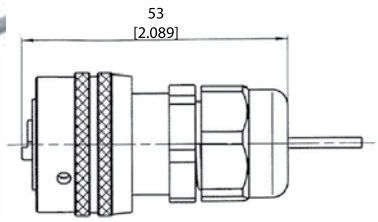


RJ11F 6 X

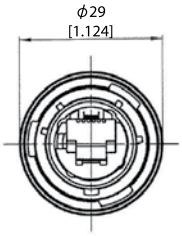


## Receptacles

■ Square flange receptacle, 4 mounting holes: shell type 2

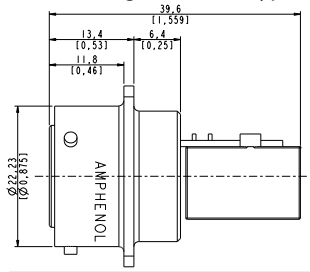


RJ11F 2 XX

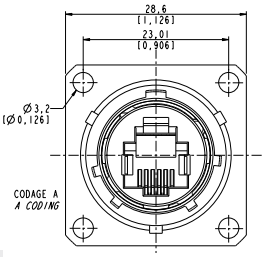


Panel Drilling

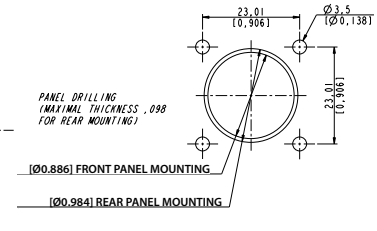


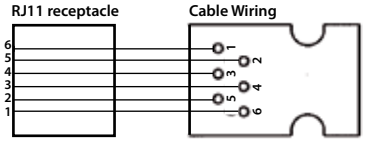


■ Jam nut receptacle, Hexagonal Nut mounting: Shell type 7

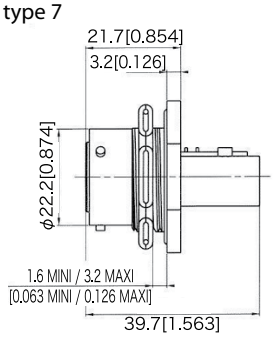


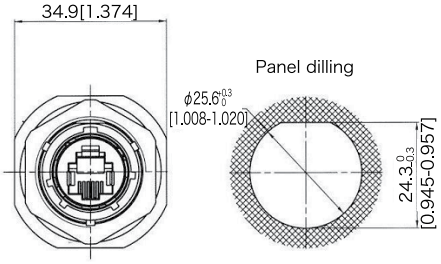


RJ11F 7 XX

## Back terminations

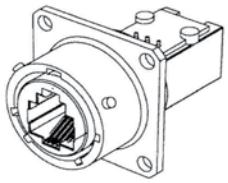

Type 1: Female RJ11 / RJ12

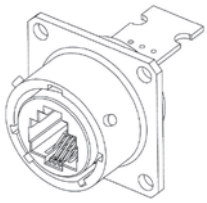

Type 2: Solder 6 Tinned through holes to solder your cable

## Assembly instructions

Easy and Safe: No field cabling tools required

1. Pass the RJ11 / RJ12 plug through the plastic gland
2. Lateraly slide the insert on the cable
3. Fix the RJ11 / RJ12 plug in the insert , pushing on the lever
4. Insert in the metallic housing
5. Tighten the plastic gland

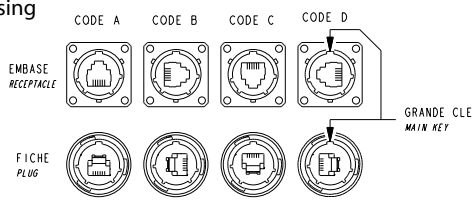


INSERTS CODING
Connection side views

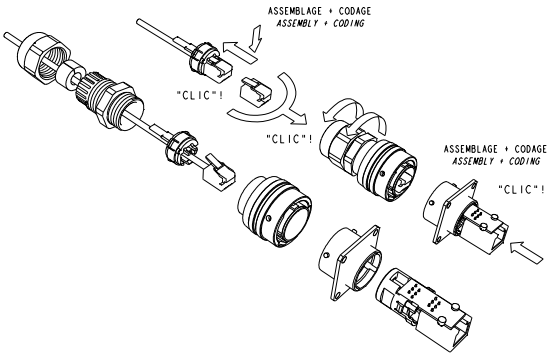

# Special RJ11 adaptor

For Military & Commercial Aeronautics

NEW

## RJ11 adaptor only

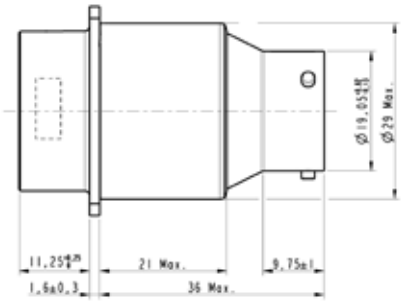


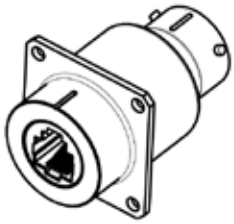

| | | Coding |
|---|---|---|
| Part number | 35639 | Y |
| | 35641 | W |
| | 35643 | Z |
| | 35645 | N |

## RJ11 adaptor + Self Closing Cap

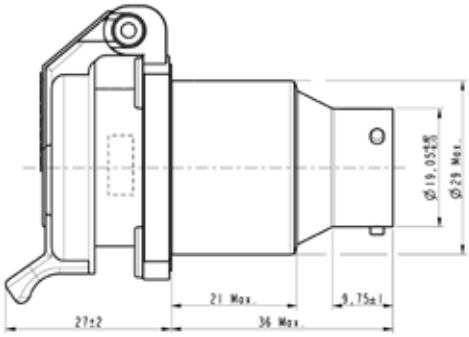


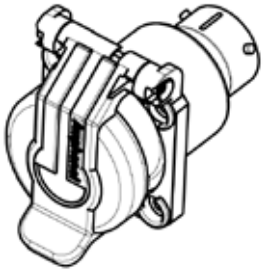

| | | Coding |
|---|---|---|
| Part number | 35623 | N |
| | 35640 | Y |
| | 35642 | W |
| | 35644 | Z |

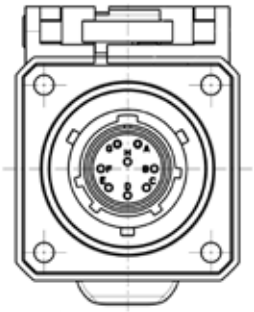

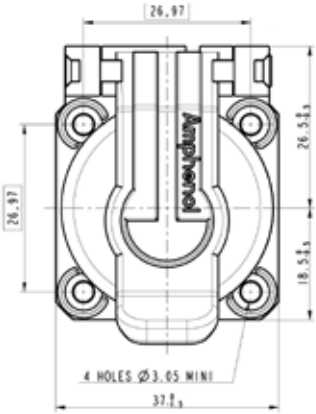


Amphenol

**For all options:**

**Panel Drilling**

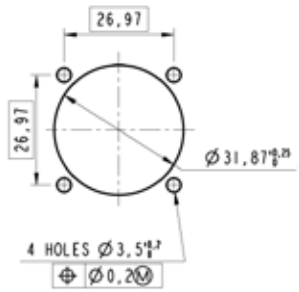


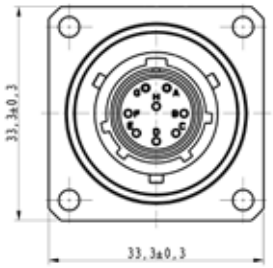


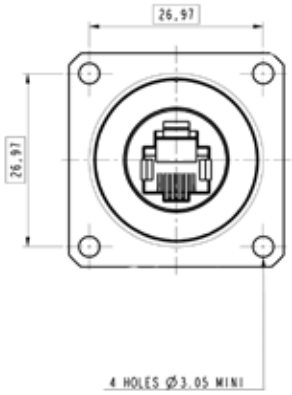


**12-8 Male contact / EN3155**

**Coding N**

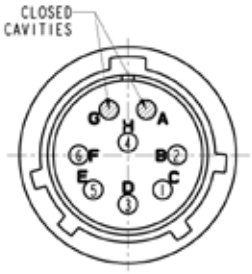


**Coding W**

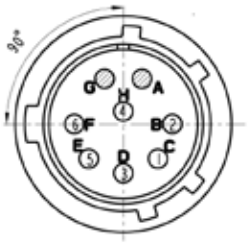


**Coding Y**

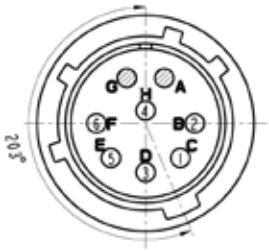


**Coding Z**

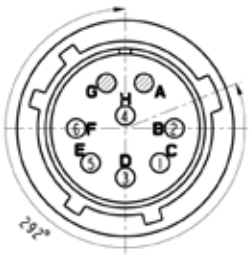

# MTRJF TV

## Transform your MTRJ patchcord into an Environmental Connector

With MTRJFTV you can use a standard MTRJ patchcord in a **metallic** plug which will protect it from shocks, dust and fluids.
**No hazardous on-field cabling!**

The MTRJ Field offers an easy system to upgrade from a standard to an environmental MTRJ.
- Sealed against fluids and dust (IP68)
- Shock, Vibration proof,
- No cabling operation in field and no tools required for installation

### Applications
- Railways
- Base Station
- Military communication
- Navy

### Mechanical characteristics
- Number of Channels: 2
- Typical Insertion Loss: 0,5dB in MM
- Durability: 500 mating/unmating cycles (changes for<0,2 dB)

### Part Number Code

| | | | | | |
|---|---|---|---|---|---|
| **Serie** | **MTRJF TV** | **6M** | **C** | **G** | **N** |
| MTRJ Field TV | | | | | |
| **Shell Type** | | | | | |
| 6: | Plug with metal backshell, plastic PG clamp | | | | |
| 6M: | Plug with metal backshell and metal PG clamp | | | | |
| 2: | Square flange receptacle | | | | |
| 2PE: | Square flange, metal backshell and plastic PG clamp | | | | |
| 2PEM: | Square flange, metal backshell and metal PG clamp | | | | |
| 7: | Jam nut receptacle | | | | |
| 7PE: | Jam nut, metal backshell and plastic PG clamp | | | | |
| 7PEM: | Jam nut, metal backshell and metal PG clamp | | | | |
| **Cable Type** | | | | | |
| Only for receptacle | | | | | |
| 0: | Receptacle without backshell | | | | |
| **Only for plug** | | | | | |
| C: | Mini round cable 2,8 mm | | | | |
| D: | Flat duplex cable 1,6 mm | | | | |
| S: | Duplex zipcord 1,6 mm | | | | |
| T: | Flat duplex cable + Duplex zipcord for 1,6 mm - 2mm - 2,8mm | | | | |
| **Shell Finish** | | | | | |
| N: | Nickel plated | | | | |
| G: | Olive drab cadmium plated | | | | |
| B: | Bronze | | | | |
| D: | Black zinc cobalt | | | | |
| Z: | Olive drab zinc cobalt | | | | |
| **Polarization** | | | | | |
| N: | Normal | | | | |
| A / B / C / D / E | | | | | |

| | | | | | | |
|---|---|---|---|---|---|---|
| **Cap Series** | **B** | **EC** | **N** | **TV** | **W** | **13** |
| **Protective cap type** | | | | | | |
| EC: | For square flange receptacle | | | | | |
| ER: | For jam nut receptacle | | | | | |
| F: | For plug | | | | | |
| **Wire type** | | | | | | |
| N: | Nylon cord | | | | | |
| Blank: | Metallic chain | | | | | |
| **TV**: | Series | | | | | |
| **Shell finish** | | | | | | |
| B: | Bronze | | | | | |
| F: | Electroless nickel plated, aluminium version | | | | | |
| W: | Olive drab cadmium plated, aluminium version | | | | | |
| D: | Black zinc cobalt | | | | | |
| Z: | Olive drab zinc cobalt | | | | | |

**Requested information to order MTRJ Field Patchcord**

| | |
|---|---|
| Plug MTRJ: | Male /Female |
| Type of fiber: | 50/125, 62,5/125, 9/125 |
| Patchcord length: | ex 10.5m |
| Drawing: | description of the product |

Contact us for other configuration

**Dismounting Tool Ordering Information**
MTRJFTV DM TOOL

## Line drawings *(Dimensions in mm)*

■ Plug (MIL DTL 38 999 series III Size 13)

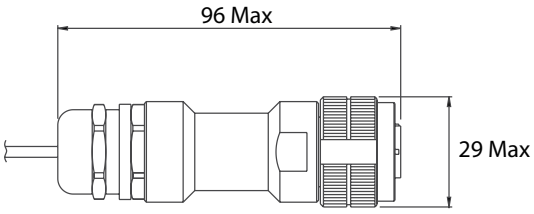


MTRJ FTV 6 X

■ Receptacle (MIL DTL 38 999 series III Size 13) with backshell

*Jam Nut receptacle with backshell*

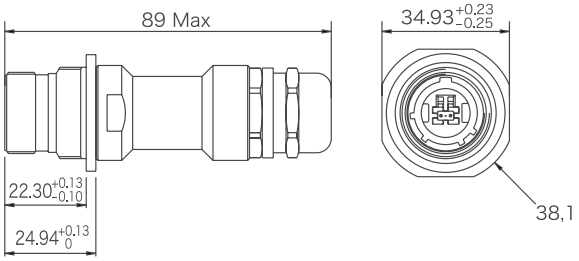


MTRJ FTV 7PE/7PEM

*Square flange receptacle with backshell*

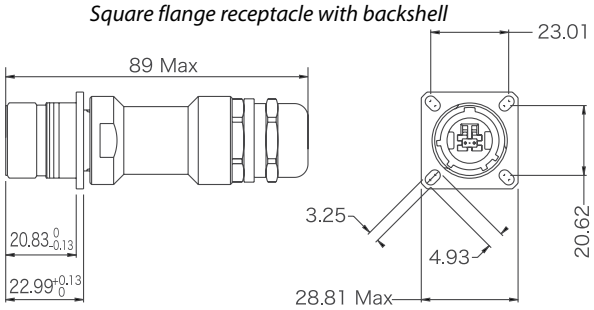


MTRJ FTV 2PE/2PEM

■ Square Flange Receptacle (MIL DTL 38 999 series III Size 13)

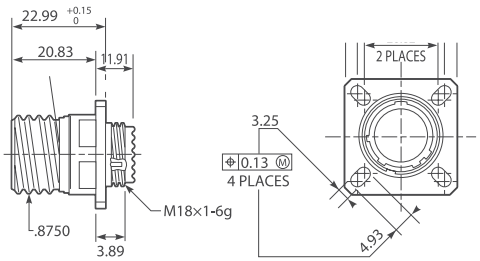


MTRJ FTV 2 XXX

Square flange receptacle rear panel mounting

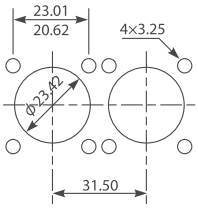


Square flange receptacle front panel mounting

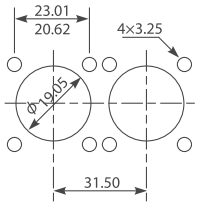


Panel Drilling

■ Jam Nut Receptacle (MIL DTL 38 999 series III Size 13)

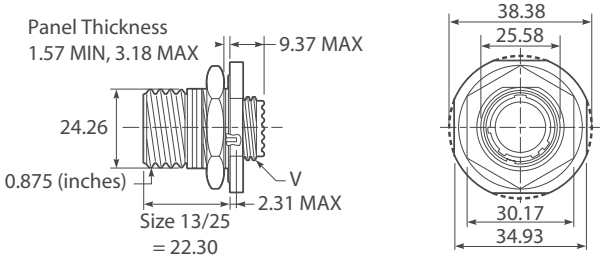


MTRJ FTV 7 XXX

Jam nut receptacle rear panel mounting

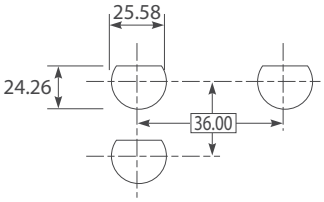


Panel Drilling

## Protective caps

Protective cap for plug (nylon cord)

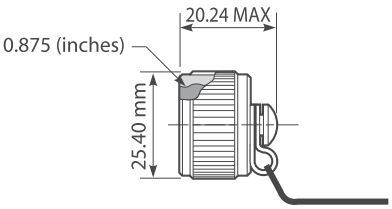


Protective cap for receptacles (nylon cord)

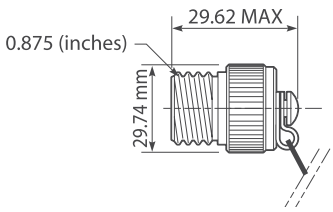

# LC FIELD

## Transform your LC patchcord into an Environmental Connector

The LC Field offers an easy system to upgrade from a standard to an environmental LC.

- Sealed against fluids and dust (IP68)
- Shock, Vibration proof
- No cabling operation in field and no tools required for installation (except 1,6mm and 2mm zipcord cable)

With the patented RJStop® system you can use a standard LC patchcord in a metallic plug which will protect it from shocks, dust and fluids.
**No hazardous on-field cabling!**

### Applications

- Railways
- Base Station
- Military communication
- Navy

### Mechanical characteristics

- Number of Channels: 2
- Typical Insertion Loss: 0,5dB in MM and SM
- Durability 500 mating/unmating cycles (changes for<0,2 dB)

### Part Number Code

| | | | | | |
|---|---|---|---|---|---|
| **Serie**<br>Optical connector type | LCF TV | 6M | D | G | N |
| **Shell Type**<br>6M: Plug with metal backshell and metal PG clamp<br>2: Square flange receptacle without backshell<br>7: Jam nut receptacle without backshell | | | | | |
| **Cable Type**<br>Only for plug<br>D: Flat duplex cable 1,6 mm<br>E: Duplex zipcord 1,6 mm<br>F: Flat duplex cable 2 mm<br>G: Duplex zipcord 2 mm<br>H: Flat duplex cable 2,8 mm<br>I: Duplex zipcord 2,8 mm<br>T: Flat duplex cable + Duplex zipcord for 1,6 mm - 2 mm - 2,8 mm<br>Only for receptacle (no backshell available for receptacle)<br>0: Receptacle without backshell | | | | | |
| **Shell Finish**<br>N: Nickel plated<br>G: Olive drab cadmium plated<br>B: Bronze<br>D: Black zinc cobalt<br>Z: Olive drab zinc cobalt | | | | | |
| **Polarization**<br>N: Normal<br>A / B / C / D / E | | | | | |

| | | | | | | |
|---|---|---|---|---|---|---|
| **Cap Series** | B | EC | N | TV | W | 19 |
| **Protective cap type**<br>EC: For square flange receptacle<br>ER: For jam nut receptacle<br>F: For plug | | | | | | |
| **Wire type**<br>N: Nylon cord<br>Blank: Metallic chain | | | | | | |
| **TV:** Series | | | | | | |
| **Shell finish**<br>B: Bronze<br>F: Electroless nickel plated, aluminium version<br>W: Olive drab cadmium plated, aluminium version<br>D: Black zinc cobalt<br>Z: Olive drab zinc cobalt | | | | | | |
| Corresponding connector shell size: 19 | | | | | | |

### Requested information to order LC Field Patchcord

Type of connector: Male /Female
Type of fiber: 50/125, 62,5/125, 9/125
Patchcord length: ex 10.5m
Drawing: description of the product

*Contact us for other configuration.*

### Tools informations

**Mounting Tools:**
LCFTV MO TOOL: LC FIELD Mounting tools

**Dismounting Tools:**
LCFTV DM TOOL: LC FIELD Dismounting tools
*(To dismount the LC you need to use both dismounting and mounting tools)*

## Line drawings *(Dimensions in mm)*

■ Plug (MIL DTL 38 999 series III Size 19)

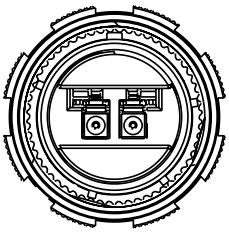

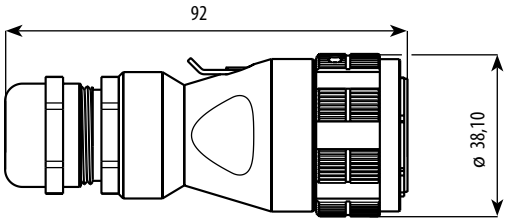


■ Square Flange Receptacle (MIL DTL 38 999 series III Size 19)

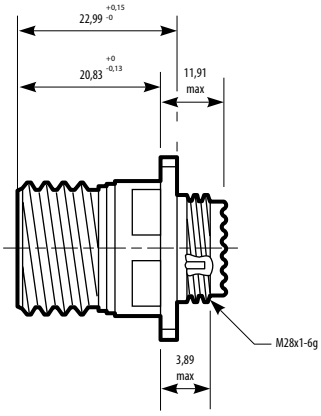


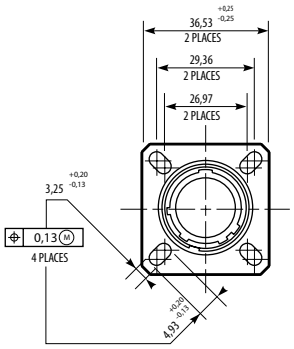


Square flange receptacle rear panel mounting

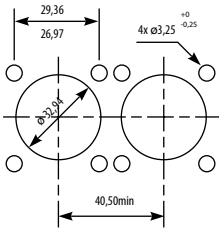


Square flange receptacle front panel mounting

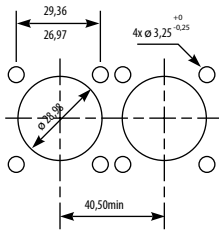


Panel Drilling

■ Jam Nut Receptacle (MIL DTL 38 999 series III Size 19)

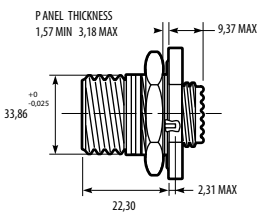


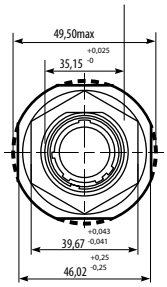


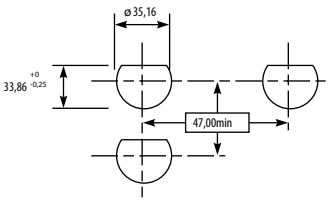


Panel Drilling

Jam nut receptacle rear panel mounting

## Protective caps

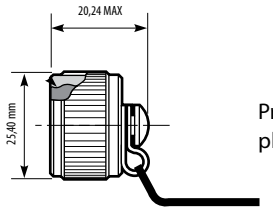


Protective cap for plug (nylon cord)

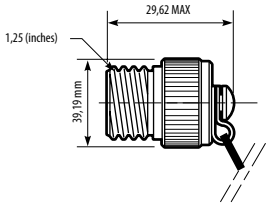


Protective cap for receptacles (nylon cord)

# GLOSSARY

**10BASE-T**
10 Mbps Ethernet on twisted-pair (Category 3) cable.

**100BASE-T**
The twisted pair version of 100 Mbps Ethernet. Requires Category 5 cabling.

**1000BASE-T**
A recent LAN standard for implementing 1000 Mbps Ethernet on Category 5 cable. Also called Gigabit Ethernet.

**Auto-MDIX**
A protocol which allows two Ethernet devices to negotiate their use of the Ethernet Transmit (Tx) and Receive (Rx) cable pairs. This allows two Ethernet devices with MDI or MDI-X connectors to connect without using a cross-over cable.

**Baud**
A unit of measurement that denotes the number of bits that can be transmitted per second. For example, if a modem is rated at 9600 baud it is capable of transmitting data at a rate of 9600 bits per second.

**Bandwidth**
The maximum capacity of a network channel. Usually expressed in bits per second (bps). Ethernet channels have bandwidths of 10, 100, and 1000 Mbps (Gigabit).

**bps**
Bits Per Second is the unit used for measuring line speed, the number of information units transmitted per second.

**Broadcast**
A transmission initiated by one station and sent to all stations on the network.

**Byte**
The amount of memory needed to store one character such as a letter or a number. Equal to 8 bits of digital information. The standard measurement unit of a file size.

**Category 5**
A performance classification for twisted pair cables, connectors and systems. Specified to 100 MHz. Suitable for voice and data applications up to 155 Mbps.

**Category 5 e**
Also called Enhanced Category 5. A performance classification for twisted pair cables, connectors and systems. Specified to 100 MHz. Suitable for voice and data applications up to 1000 Mbps.

**Category 6**
A performance classification for twisted pair cables, connectors and systems.Specified up to 250 MHz.

**CSMA/CD**
Carrier Sense Multiple Access/Collision Detect. The Medium Access Control (MAC) protocol used in Ethernet.

**Data rate**
The speed of the data transmission, measured in bps (bits per second) or Mbps.

**Duplex (Full, Half)**
Full duplex is a communications method that allows for the simultaneous transmission and reception of data. In Half Duplex communication, transmissions and receptions can occur in either direction but not at the same time.

**Ethernet**
The most common network protocol in use. A protocol is a set of rules enabling data communications. Ethernet can operate over several different media including fiber optic, coaxial cable and twisted-pair cable.

**IEEE 802.3**
IEEE Working Group for CSMA/CD, the protocol used in Ethernet transmissions.

**IGMP snooping**
The ability of a switch to observe Internet Group Multicast Protocol (IGMP) traffic in order to learn IP Multicast group membership. The purpose is to restrict multicast transmissions to only those ports which have requested them.

**LAN**
Local Area Network. A network of directly-connected machines (located in close proximity), providing high speed communication over physical media such as fiber optics, coaxial cable, or twisted pair wiring.

### MAC Address
A unique address assigned to a station interface, identifying that station on the network. With Ethernet, this is the unique 48-bit station address. Same as the physical address.

### Megabit (Mb)
Megabit. One million bits of information, usually used to express a data transfer rate ; 1 Megabit/ second = 1Mbps.

### Megabyte (MB)
MegaByte. A unit of data storage size which represents one million characters of information.

### Multicast
A transmission initiated by one station to many stations of the network.

### Port Mirroring
Port mirroring allows a switch port to monitor packets from any or all of its ports so that traffic can be analysed.

### Quality of Service (QoS)
Some switches support QoS (per 802.1p and 802.1Q standards) whereby messages can be assigned levels of priority. QoS is important where time-critical applications can be impaired by data delays.

### RJ45
8-position modular jacks used on twisted pair links for Ethernet cabling.

### RJ-Field
A wide range of connectors which allow to reinforce and seal standard RJ45 cable. See www.rjfield.com

### SNMP
Simple Network Management Protocol. This is THE standard used for switch management programs.

### Spanning Tree Protocol (STP)
A link management protocol providing path redundancy and preventing network loops by defining a tree to span all switches in a network. It forces redundant data paths into a standby (blocked) state. If a path malfunction occurs, the topology is reconfigured and the link reestablished by activating the standby path.

### TCP/IP
Transmission Control Protocol/Internet Protocol. A set of protocols, resulting from ARPA efforts, used by the Internet to support services such as remote login (TELNET), file transfer (FTP) and mail (SMTP).

### TELNET
The Internet standard protocol for remote login (terminal connection) service. TELNET allows a user at one site to interact with a remote timesharing system at another site as if the user's terminal were connected directly to the remote computer.

### VLAN
Virtual Local Area Network. A LAN that maps stations on a basis other than location such as by department, user type or application. Managing traffic, workstations, and bandwidth can be easier with a VLAN and improve network efficiency.

### CABLE datas

| | Category 5 (Cat5) | Category 5E (Cat5E) | Category 6 (Cat6) | Category 6a (Cat6a) | Category 6A (Cat6A) | Category 7 (Cat7) |
|---|---|---|---|---|---|---|
| **Data rate** | 100 MBit/s | 1 GBit/s | 1 GBit/s | 10 GBit/s | 10 GBit/s | 10 GBit/s |
| **Frequency** | 100 Mhz | 100 Mhz | 250 Mhz | 500 Mhz | 500 Mhz 3db | 600 Mhz |
| **Twisted pairs** | 2 or 4 pairs | 4 pairs | 4 pairs | 4 pairs (each pair invidually shielded) | 4 pairs (each pair invidually shielded) | 4 pairs (each pair invidually shielded) |
| **Max lenght** | 100 m | 100 m | 55 m | 100 m | 100 m | 100 m |
| **Specification** | ANSI/TIA-568-A 1-2001 | TIA/EIA-568-5-A | ANSI/TIA-568-B. 2-**1** | ANSI/TIA-568-B. 2-**10** | ISO/IEC 11801 amendment 2 | ISO/IEC 11801 2002 category7/ class F |

## NOTES

## NOTES

# **Amphenol** in the world

## Amphenol Socapex

948, promenade de l'Arve BP29
74311 Thyez Cedex - France
Phone: +33 (0)4 50 89 28 00
**contact@amphenol-socapex.fr**
***www.amphenol-socapex.com***

*www.twitter.com/AmphenolSocapex*
*www.linkedin.com/company/amphenol-socapex*

## Other Amphenol Sales contacts in Europe

**Amphenol Air LB**
10 rue champ Raymond
08110 Carignan - France
Phone: +33 (0)1 49 05 30 00

**Amphenol AIR LB GmbH**
Am Kleinbahnhof 4
66740 Saarlouis - Germany
Phone: +49 6831 981 00

**Amphenol TUCHEL ELECTRONICS**
August-Haeusser-Str. 10
D-74080 Heilbronn - Germany
Phone: +49 7131 929 00

**Amphenol BENELUX**
Zadelmaker 121
NL - 2401 PD Alphen aan den Rijn - The Netherlands
Phone: +31 172 444 903

**Amphenol Limited Whitstable**, UNITED KINGDOM
Thanet Way, Whitstable
Kent, CT53JF - United Kingdom
Phone: +44 1227 773 200

**Amphenol ITALY**
Via Barbaiana n.5
20020 Lainate - Milano - Italy
Phone: +39 293 254 214

**Amphenol IBERICA**
Edificio Burgosol, Oficina nr 55 - Comunidad de Madrid, 35-bis Las Rozas (Madrid) - Spain
Phone: +34 91 640 73 06

**Amphenol NORDIC**
Phone: +46 702 129 200 (Mil/Aero)
+46 76-790 95 60 (Industrial)

**Amphenol POLAND & CENTER EAST EUROPE** - *Austria, Poland, Czech Rep., Slovakia, Romania*
Wiener gasse 68 - 2380 Perchtoldsdorf - Austria
Phone: +43 699 10396 071

**Amphenol SWITZERLAND & SOUTH CENTER**
*Switzerland, Slovenia, Serbia, Montenegro, Yugoslavia, Greece, Bulgaria*
948, promenade de l'Arve BP29
74311 Thyez Cedex - France
Phone: +33 (0)4 50 89 28 40

## Amphenol Sales contacts in Asia

**Amphenol Daeshin**
558 SongNae-Dong SoSa-Gu, Bucheon-city, Kyunggi-Do
Korea 420-130
Phone: +81-32 610 3830/3845

**Amphenol East Asia Ltd.**
No.72, Bendemeer Road,
#03-32/33, Luzerne
Singapore 339941
Phone: +65 6294 2128

**Amphenol Interconnect India Private Limited**
105 Bhosari Industrial Area - Pune 411 026 - India
Phone: +91 20 3068 8304

**Amphenol PCD CO. LTD**
Building 21, 1st Liao Keng Industrial Zone, Shi Yan Street
Bao An District, Shenzhen 518108
China
Phone: +86 755 8173 8000/8286

**Amphenol Japan**
471-1, Deba, Ritto-City, Shiga 520 3041 - Japan
Phone: +81 77 553 8501

## Amphenol Sales contacts in North America

**Amphenol PCD**
72 Cherry Hill Drive - Beverly, MA. 01915 - USA
Phone: +1 978 624 3400

**Amphenol Fiber System Int.**
1300 Central Expwy N, Suite 100
Allen, TX 75013 - USA
Phone: +1 214 547 2400

**Amphenol Aerospace Operations**
40-60 Delaware street - Sidney, NY 13838-1395 - USA
Phone: +1 607 563 5011

**Amphenol Backplane Systems**
18 Celina avenue - Nashua, NH 03063 - USA
Phone: +1 603 883 5100

**Amphenol Canada Corporation**
605 Milner avenue - Toronto, Ontario - Canada - M1B 5X6
Phone: +1 416 291 4401

## Amphenol Sales contacts in Other Areas

**Amphenol Argentina**
Av. Callao 930 2do piso Oficina B "Plaza" C1023 - AAP
Buenos Aires - Argentina
Phone: +54 11 4815 6886

**Amphenol Australia Pty Limited**
2 Fiveways Blvd., Keysborough - Melbourne
Victoria 3173- Australia
Phone: +61 3 8796 8888

**Amphenol Do Brazil**
Rua Diogo Moreira, 132, 20 andar, rooms 2001-2-3
CEP: 05423-010 Sao Paulo SP - Brazil
Phone: +55 11 3815 1003

**Bar-Tec Ltd., ISRAEL**
3 Hagavish Street, K fir-Barkan Bldg. East Industrial Zone - Kfar-Sava, 44102 - Israel
Phone: +972 9 764 4100

**Amphenol Mexico**
Prolongacion Reforma 61-6 B2
Col Paseo de las Lomas - C.P. 013130 Mexico
Phone: +52 55 5258 9984

**Amphenol Russia**
Yaroslavskaja Street 8,
129164 Moscow - Russia
Phone: +7 495 937 6341

**Amphenol Africa**
30 Impala Rd,
Sandton 2146, South Africa
Tel: +27 82 410 5179

**Amphenol TURKEY**
Sun Plaza 15 Kat: 15 Maslak Hah. Bilim Sok. No.5
Sisli/Istanbul, 34398 - Turkey
Phone: +90 212 367 92 19

**www.amphenol-socapex.com**

For Technical Support, please contact us:
+33 (0)4 50 89 28 49
www.amphenol-socapex.com/technical_support

*The information given in this document are as a guideline only.*
*We reserve the right to modify our products in any way we deem necessary.*
*Any duplication is prohibited, unless approved in writing.*
*Designed by* **Amphenol Socapex** - ***December 2013***

**Your local Contact:**

DOC-000075-ANG

For more information, please visit our websites:
**www.rjfield.com - www.usbfield.com - www.fwfield.com - www.rjswitch.com**