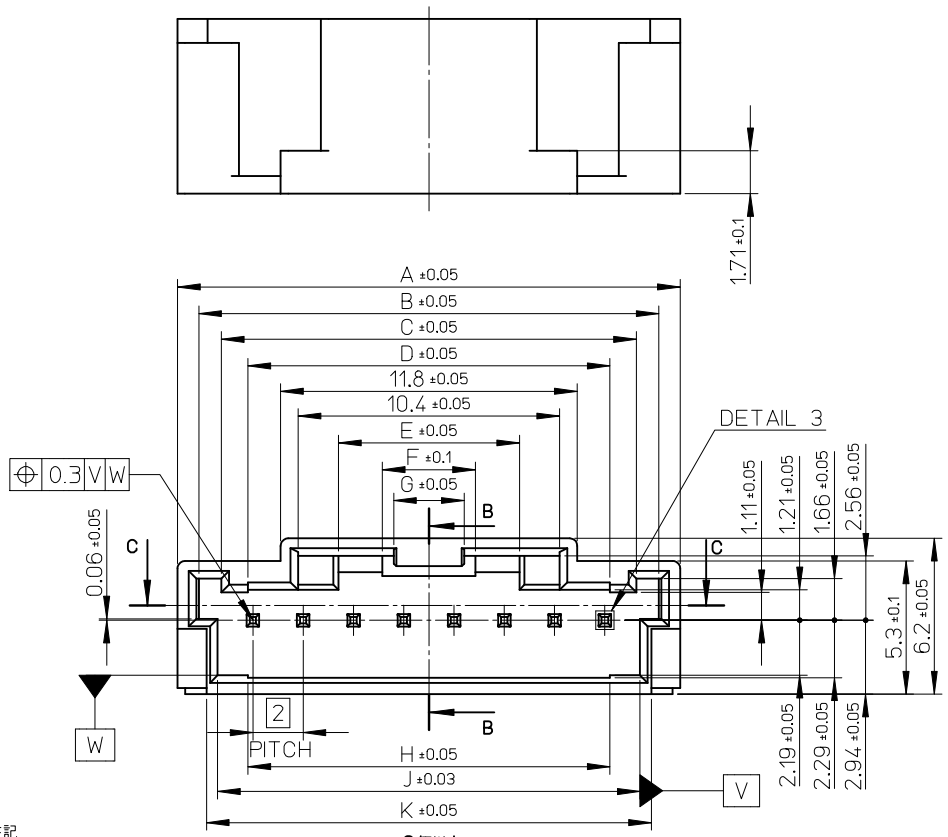

6極以上
6CKTS OR MORE

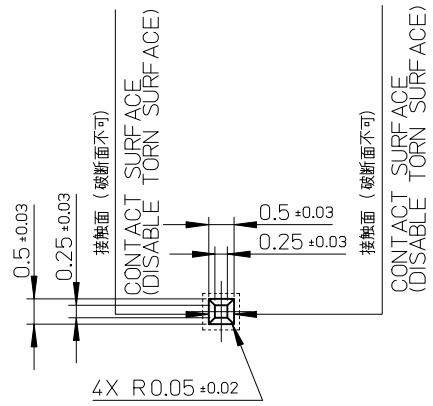

DETAIL 3
SCALE 10:1

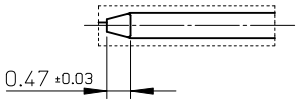

DETAIL 4
SCALE 10:1

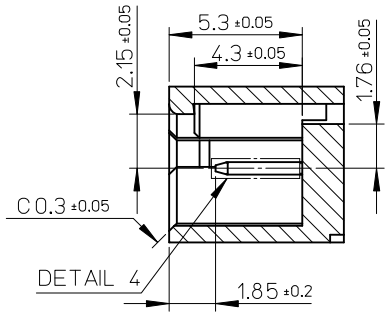

SECTION B-B

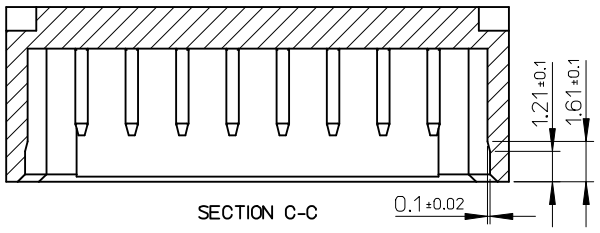

SECTION C-C

K	J	H	G	F	E	D	C	B	A	CKT
31.7	30.8	28.4	2.8	3.7	7.2	28.4	30.5	32.3	34	15
29.7	28.8	26.4	2.8	3.7	7.2	26.4	28.5	30.3	32	14
27.7	26.8	24.4	2.8	3.7	7.2	24.4	26.5	28.3	30	13
25.7	24.8	22.4	2.8	3.7	7.2	22.4	24.5	26.3	28	12
23.7	22.8	20.4	2.8	3.7	7.2	20.4	22.5	24.3	26	11
21.7	20.8	18.4	2.8	3.7	7.2	18.4	20.5	22.3	24	10
19.7	18.8	16.4	2.8	3.7	7.2	16.4	18.5	20.3	22	9
17.7	16.8	14.4	2.8	3.7	7.2	14.4	16.5	18.3	20	8
15.7	14.8	12.4	2.8	3.7	7.2	12.4	14.5	16.3	18	7
13.7	12.8	10.4	2.8	3.7	7.2	10.4	12.5	14.3	16	6
11.7	10.8	8.4	2.8	3.7	7.2			12.3	14	5
9.7	8.8	6.4	2.8	3.7	7.1			10.3	12	4
7.7	6.8	4.4	2	2.9	5.1			8.3	10	3
										2

注記
NOTES

1.弊社製品寸法を保証するものではありません。
THS DRAWING IS NOT GUARANTY DIMENSIONS FOR MOLEX PRODUCT.
2.嵌合相手
MATES WITH
502351-**0*：DuraClik
505151-**00：DuraClik TPA
560123-**0*：DuraClik ISL
3.メッキ仕様
ピン：銅合金、ニッケル下地(1μm以上)、錫メッキ(1μm以上)
PLATING SPEC
PIN：COPPER ALLOY,TIN(1μm MIN.) OVER NICKEL(1μm MIN.) PLATE.
4.参照図面
REFERENCE DRAWING
SD-502352-001

RECOMMENDED DIMENSIONS FOR CONNECTOR INTERFACE

RELEASED
EC NO: JTR2016-0011
DRWN:YTAMAKI 2015/03/25
CH'KD:HKOMATSU 2015/07/24
APPR:MAYAMAMOTO 2015/07/24
DESCRIPTION
REV 0

QUALITY SYMBOLS
F=0
F=0
F=0

GENERAL TOLERANCES (UNLESS SPECIFIED)

	mm	INCH
4 PLACES	± ---	± ---
3 PLACES	± ---	± ---
2 PLACES	± ---	± ---
1 PLACE	± ---	± ---
0 PLACE	± ---	± ---

ANGULAR ± - °
DRAFT WHERE APPLICABLE MUST REMAIN WITHIN DIMENSIONS

DIMENSION STYLE: MM ONLY
SCALE: 5:1
DESIGN UNITS: METRIC
THIRD ANGLE PROJECTION

DRAWN BY: YTAMAKI DATE: 2015/03/25
CHECKED BY: HKOMATSU DATE: 2015/07/24
APPROVED BY: MAYAMAMOTO DATE: 2015/07/24
MATERIAL NO.: ---

TITLE
2.0MM PITCH W/B CONN.
INTERFACE DRAWING

molex

DOCUMENT NO.: SD-502352-003-JP
SHEET NO.: 1 OF 2
SIZE: A3

THIS DRAWING CONTAINS INFORMATION THAT IS PROPRIETARY TO MOLEX INCORPORATED AND SHOULD NOT BE USED WITHOUT WRITTEN PERMISSION

CKTS	ISL Receptacle	TPA Receptacle	Standard Receptacle
15		505151	502351
14			
13			
12			
11			
10	560123		
9			
8	560123		
7			
6	560123		
5			
4	560123		
3			
2			
Mate With Series			

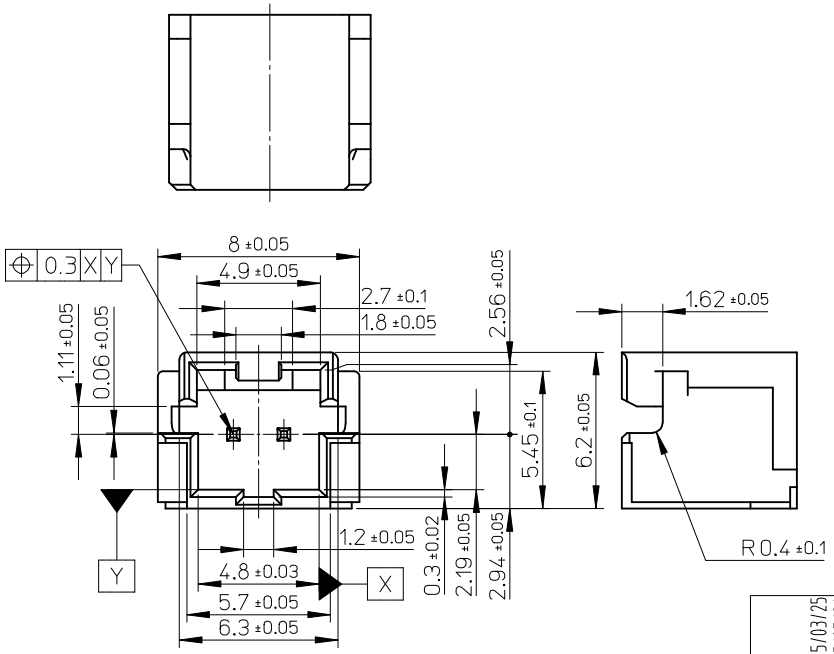

2極
2CKT

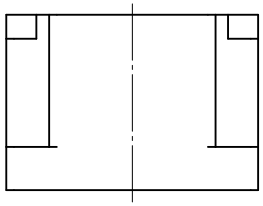

3極
3CKT

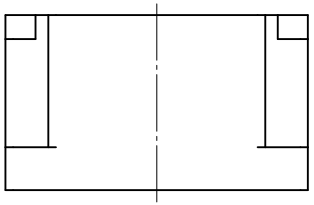

4極
4CKT

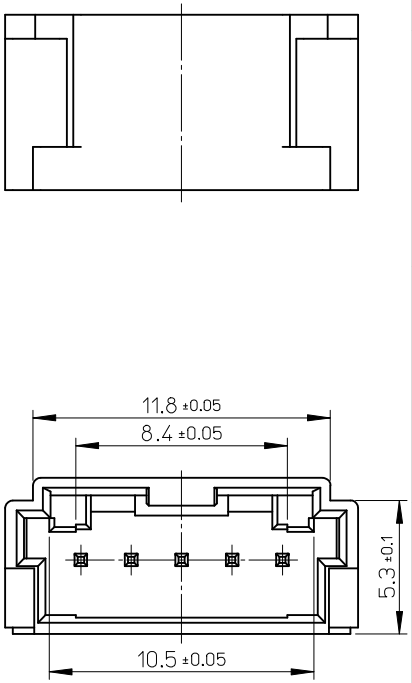

5極
5CKT

RECOMMENDED DIMENSIONS
FOR CONNECTOR INTERFACE

RELEASED
EC NO: JTR2016-0011
DRWN:YTAMAKI 2015/03/25
CH'KD:HKOMATSU 2015/07/24
APPR:MAYAMAMOTO 2015/07/24
DESCRIPTION
REV 0

QUALITY SYMBOLS
E =0
C =0
B =0

GENERAL TOLERANCES (UNLESS SPECIFIED)

	mm	INCH
4 PLACES	± ---	± ---
3 PLACES	± ---	± ---
2 PLACES	± ---	± ---
1 PLACE	± ---	± ---
0 PLACE	± ---	± ---
ANGULAR ± - °		

DRAFT WHERE APPLICABLE MUST REMAIN WITHIN DIMENSIONS

DIMENSION STYLE: MM ONLY
SCALE: 5:1
DESIGN UNITS: METRIC
THIRD ANGLE PROJECTION

DRAWN BY	YTAMAKI	DATE 2015/03/25
CHECKED BY	HKOMATSU	DATE 2015/07/24
APPROVED BY	MAYAMAMOTO	DATE 2015/07/24
MATERIAL NO.	---	

TITLE: 2.0MM PITCH W/B CONN. INTERFACE DRAWING

molex

DOCUMENT NO. SD-502352-003-JP
SHEET NO. 2 OF 2
SIZE A3

THIS DRAWING CONTAINS INFORMATION THAT IS PROPRIETARY TO MOLEX INCORPORATED AND SHOULD NOT BE USED WITHOUT WRITTEN PERMISSION

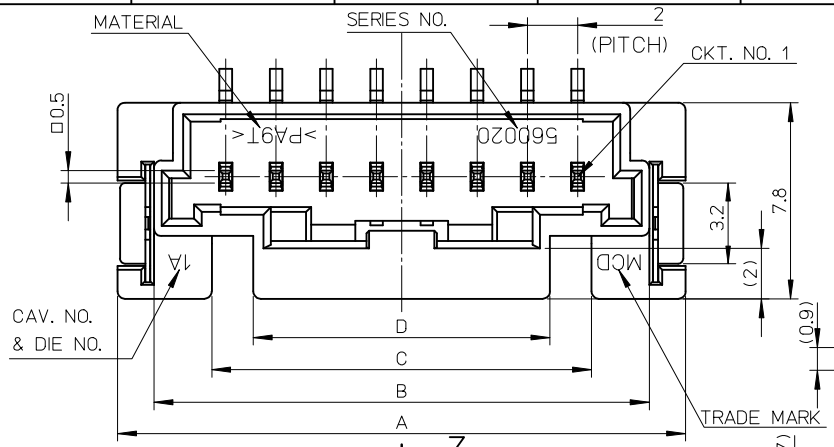

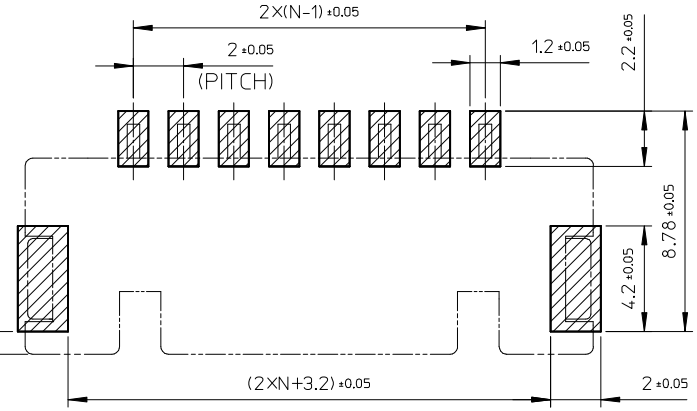

参考基板レイアウト（N=極数）

PCB PATTERN LAYOUT(N:CIRCUIT)

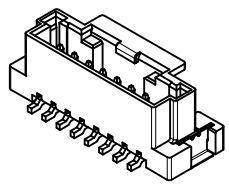

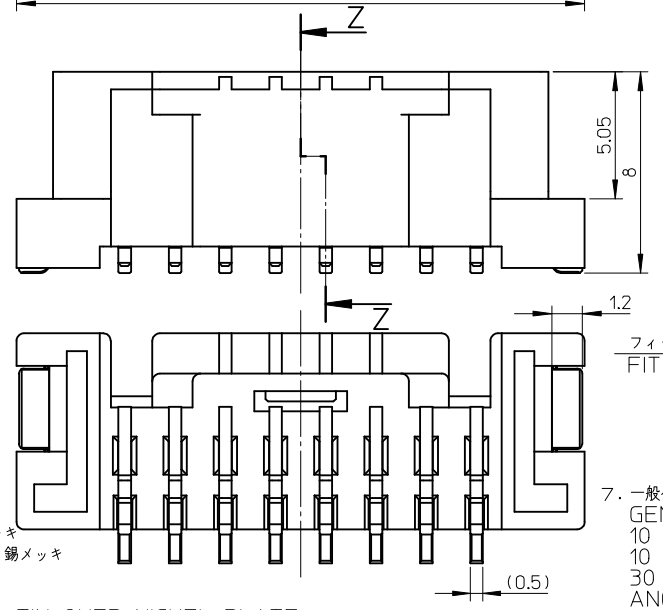

8CKTS

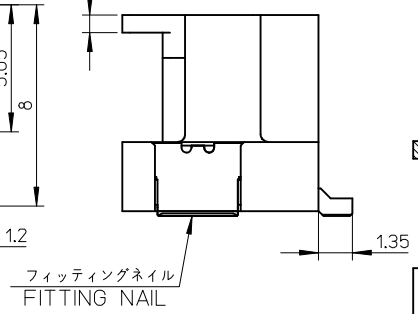

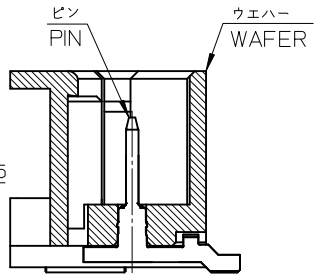

SECTION Z-Z

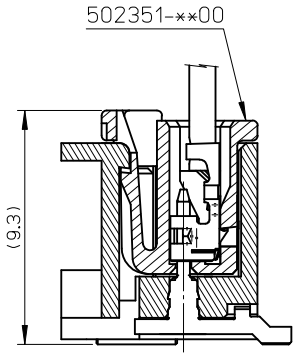

嵌合図

MATED DRAWING

注記

NOTES

1. 材質
   ウエハー：耐熱性ナイロン UL94V-0
   ピン：銅合金、ニッケル下地、錫メッキ、金メッキ
   フィッティングネール：銅合金、ニッケル下地、錫メッキ
   MATERIAL
   WAFER: POLYAMIDE UL94V-0
   PIN: COPPER ALLOY,GOLD OR TIN OVER NICKEL PLATE.
   FINNTING NAIL: COPPER ALLOY, TIN OVER NICKEL PLATE.
2. 色：ナチュラル
   COLOR: NATURAL
3. 嵌合相手：
   ハウジング:502351-**00
   錫メッキ端子:50212-8*00,50372-8*00,560085-0101
   金メッキ端子:56161-8*81
   MATES WITH
   HOUSING:502351-**00
   SN PLATING TERMINAL: 50212-8*00,50372-8*00,560085-0101
   AU PLATING TERMINAL: 56161-8*81
4. エンボス梱包品の詳細はSD-560020-002参照
   DETAILED TAPING PACKAGE, SEE SD-560020-002
5. ELV及びRoHS適合
   ELV AND RoHS COMPLIANT
6. 半田付け面のコプラナリティ: 0.1mm MAX.
   CO-PLANARITY OF SOLDER TAILS TO BE 0.1mm MAX.
7. 一般公差
   GENERAL TOLERANCES
   10 UNDER:0.2
   10 OVER 30 UNDER:0.25
   30 OVER:0.3
   ANGULAR±1°

REV	DESCRIPTION
T	REVISED EC NO: JTR2015-0089 DRWN:YTAMAKI 2014/12/25 CHKD:HKOMATSU 2014/12/25 APPR:MAYAMAMOTO 2015/04/28

QUALITY SYMBOLS
F_V=0
F_C=0
F_P=0

GENERAL TOLERANCES (UNLESS SPECIFIED)

	mm	INCH
4 PLACES	± ---	± ---
3 PLACES	± ---	± ---
2 PLACES	± ---	± ---
1 PLACE	± ---	± ---
0 PLACE	± ---	± ---
ANGULAR	± - °	

DRAFT WHERE APPLICABLE MUST REMAIN WITHIN DIMENSIONS

DIMENSION STYLE: MM ONLY	SCALE: 5:1	DESIGN UNITS: METRIC	THIRD ANGLE PROJECTION
DRAWN BY: SHSHIBATA	DATE: 2009/02/18	TITLE: 2.0MM PITCH W/B CONN. WAFER ASSY ST. SMT	
CHECKED BY: HKOMATSU	DATE: 2009/02/18		
APPROVED BY: AKANESHIGE	DATE: 2009/02/18	molex	
MATERIAL NO.: SEE CHART		DOCUMENT NO.: SD-560020-001	SHEET NO.: 1 OF 4
SIZE: A3	THIS DRAWING CONTAINS INFORMATION THAT IS PROPRIETARY TO MOLEX INCORPORATED AND SHOULD NOT BE USED WITHOUT WRITTEN PERMISSION		

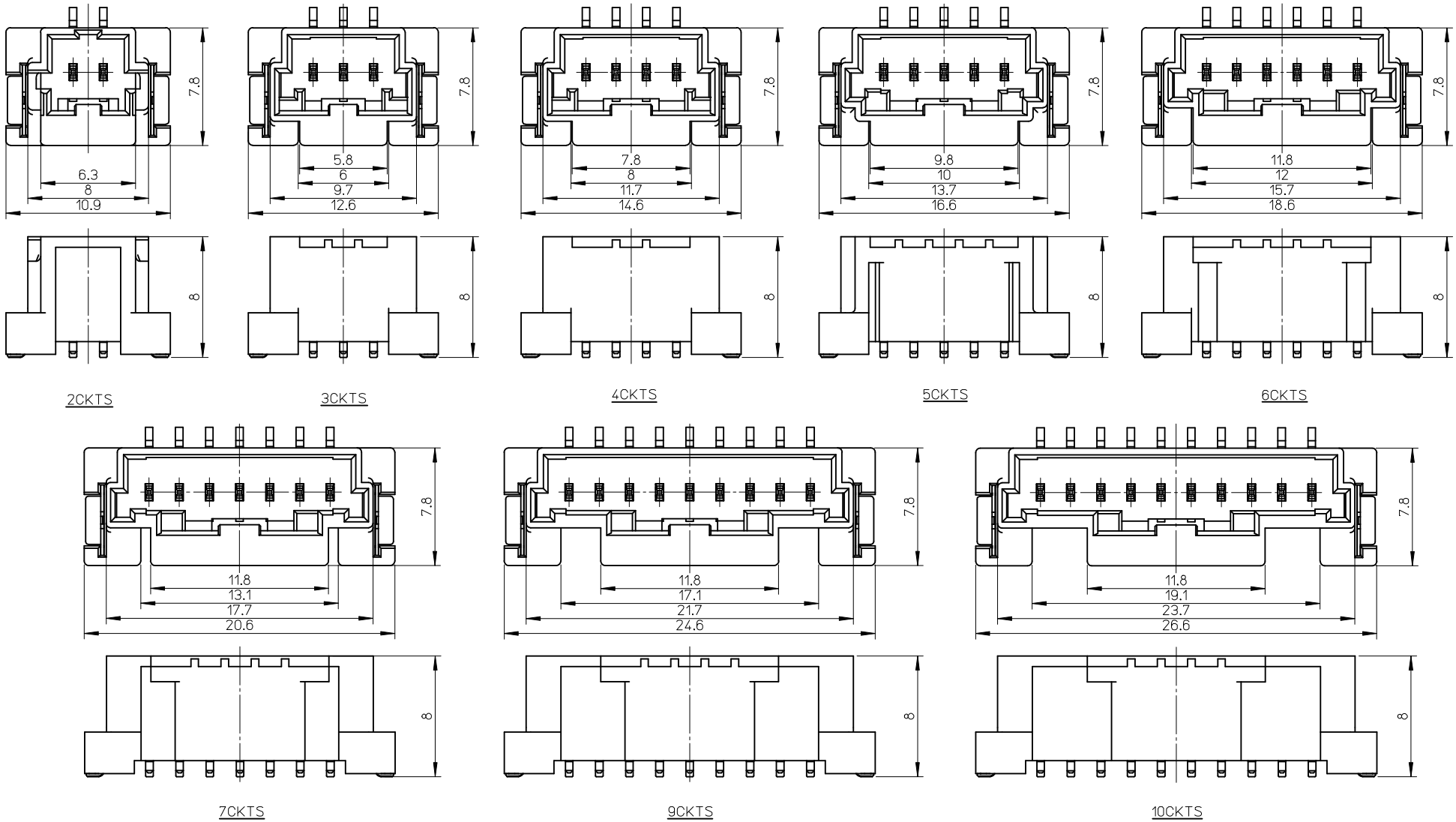

REVISED
EC NO: JTR2015-0089
DRWN:YTAMAKI 2014/12/25
CH'KD:HKOMATSU 2014/12/25
APPR:MAYAMAMOTO 2015/04/28

F

REV | DESCRIPTION

QUALITY SYMBOLS

$F_A = 0$

$F_C = 0$

$F_P = 0$

GENERAL TOLERANCES (UNLESS SPECIFIED)

	mm	INCH
4 PLACES	± ---	± ---
3 PLACES	± ---	± ---
2 PLACES	± ---	± ---
1 PLACE	± ---	± ---
0 PLACE	± ---	± ---

ANGULAR ± - °

DRAFT WHERE APPLICABLE MUST REMAIN WITHIN DIMENSIONS

DIMENSION STYLE: MM ONLY

SCALE: 4:1

DESIGN UNITS: METRIC

THIRD ANGLE PROJECTION

DRAWN BY	SHSHIBATA	DATE 2009/02/18
CHECKED BY	HKOMATSU	DATE 2009/02/18
APPROVED BY	AKANESHIGE	DATE 2009/02/18

TITLE: 2.0MM PITCH W/B CONN. WAFER ASSY ST. SMT

molex

MATERIAL NO.: SEE CHART

DOCUMENT NO.: SD-560020-001

SHEET NO.: 2 OF 4

SIZE: A3

THIS DRAWING CONTAINS INFORMATION THAT IS PROPRIETARY TO MOLEX INCORPORATED AND SHOULD NOT BE USED WITHOUT WRITTEN PERMISSION

tb_frame_A3_P_AM_T
Rev. G 2012/01/11

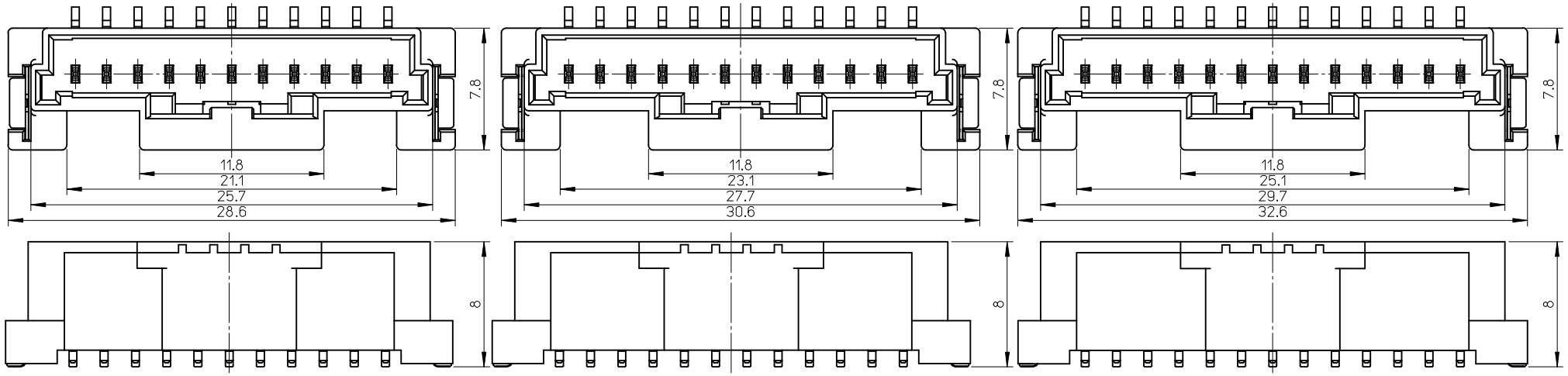

11CKTS 12CKTS 13CKTS

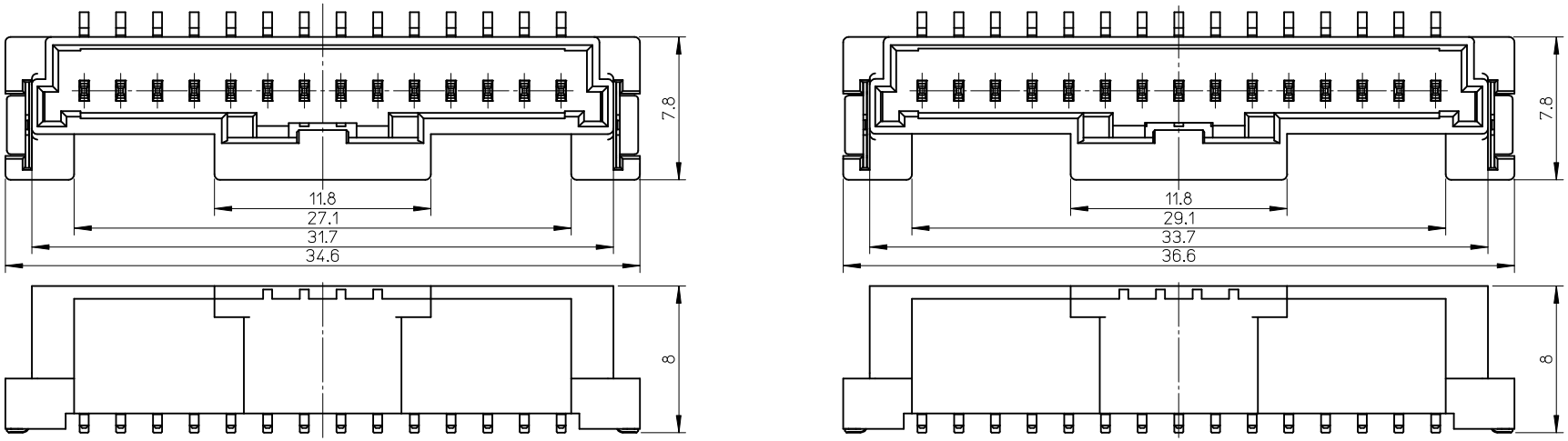

14CKTS 15CKTS

REVISED			
EC NO: JTR2015-0089			
DRWN:YTAMAKI	2014/12/25		
CH'KD:HKOMATSU	2014/12/25		
APPR:MAYAMAMOTO	2015/04/28		
REV	DESCRIPTION		

QUALITY SYMBOLS
E =0
C =0
B =0

GENERAL TOLERANCES (UNLESS SPECIFIED)

	mm	INCH
4 PLACES	± ---	± ---
3 PLACES	± ---	± ---
2 PLACES	± ---	± ---
1 PLACE	± ---	± ---
0 PLACE	± ---	± ---
ANGULAR ± - °		

DRAFT WHERE APPLICABLE MUST REMAIN WITHIN DIMENSIONS

DIMENSION STYLE: MM ONLY	SCALE: 4:1	DESIGN UNITS: METRIC	THIRD ANGLE PROJECTION
DRAWN BY: SHSHIBATA	DATE: 2009/02/18	TITLE: 2.0MM PITCH W/B CONN. WAFER ASSY ST. SMT	
CHECKED BY: HKOMATSU	DATE: 2009/02/18		
APPROVED BY: AKANESHIGE	DATE: 2009/02/18	molex	
MATERIAL NO.: SEE CHART		DOCUMENT NO.: SD-560020-001	SHEET NO.: 3 OF 4
SIZE: A3	THIS DRAWING CONTAINS INFORMATION THAT IS PROPRIETARY TO MOLEX INCORPORATED AND SHOULD NOT BE USED WITHOUT WRITTEN PERMISSION		

tb_frame_A3_P_AM_T
Rev. G 2012/01/11

Sn	11.8	29.1	33.7	36.6	560020-1520	15
	11.8	27.1	31.7	34.6	560020-1420	14
	11.8	25.1	29.7	32.6	560020-1320	13
	11.8	23.1	27.7	30.6	560020-1220	12
	11.8	21.1	25.7	28.6	560020-1120	11
	11.8	19.1	23.7	26.6	560020-1020	10
	11.8	17.1	21.7	24.6	560020-0920	9
	11.8	15.1	19.7	22.6	560020-0800/-0820	8
	11.8	13.1	17.7	20.6	560020-0700/-0720	7
	11.8	12	15.7	18.6	560020-0600/-0620	6
	9.8	10	13.7	16.6	560020-0500/-0520	5
	7.8	8	11.7	14.6	560020-0400/-0420	4
	5.8	6	9.7	12.6	560020-0300/-0320	3
	6.3		8.0	10.9	560020-0200/-0220	2
PLATING	D	C	B	A	EMBOSSED PACKAGE ORDER NO.	CKTS

CONNECTOR SERIES NO. 560020-**08

Au	11.8	29.1	33.7	36.6	560020-1530	15
	11.8	27.1	31.7	34.6	560020-1430	14
	11.8	25.1	29.7	32.6	560020-1330	13
	11.8	23.1	27.7	30.6	560020-1230	12
	11.8	21.1	25.7	28.6	560020-1130	11
	11.8	19.1	23.7	26.6	560020-1030	10
	11.8	17.1	21.7	24.6	560020-0930	9
	11.8	15.1	19.7	22.6	560020-0830	8
	11.8	13.1	17.7	20.6	560020-0730	7
	11.8	12	15.7	18.6	560020-0630	6
	9.8	10	13.7	16.6	560020-0530	5
	7.8	8	11.7	14.6	560020-0430	4
	5.8	6	9.7	12.6	560020-0330	3
	6.3		8.0	10.9	560020-0230	2
PLATING	D	C	B	A	EMBOSSED PACKAGE ORDER NO.	CKTS

CONNECTOR SERIES NO. 560020-**18

REVISED
EC NO: JTR2015-0089
DRWN:YTAMAKI 2014/12/25
CH'KD:HKOMATSU 2014/12/25
APPR:MAYAMAMOTO 2015/04/28
DESCRIPTION
REV

QUALITY SYMBOLS
E =0
C =0
B =0

GENERAL TOLERANCES (UNLESS SPECIFIED)

	mm	INCH
4 PLACES	± ---	± ---
3 PLACES	± ---	± ---
2 PLACES	± ---	± ---
1 PLACE	± ---	± ---
0 PLACE	± ---	± ---
ANGULAR ± - °		

DRAFT WHERE APPLICABLE MUST REMAIN WITHIN DIMENSIONS

DIMENSION STYLE: MM ONLY
SCALE: 5:1
DESIGN UNITS: METRIC
THIRD ANGLE PROJECTION

DRAWN BY: SHSHIBATA DATE: 2009/02/18
CHECKED BY: HKOMATSU DATE: 2009/02/18
APPROVED BY: AKANESHIGE DATE: 2009/02/18

TITLE: 2.0MM PITCH W/B CONN. WAFER ASSY ST. SMT

molex

MATERIAL NO.: SEE CHART
DOCUMENT NO.: SD-560020-001
SHEET NO.: 4 OF 4
SIZE: A3

THIS DRAWING CONTAINS INFORMATION THAT IS PROPRIETARY TO MOLEX INCORPORATED AND SHOULD NOT BE USED WITHOUT WRITTEN PERMISSION

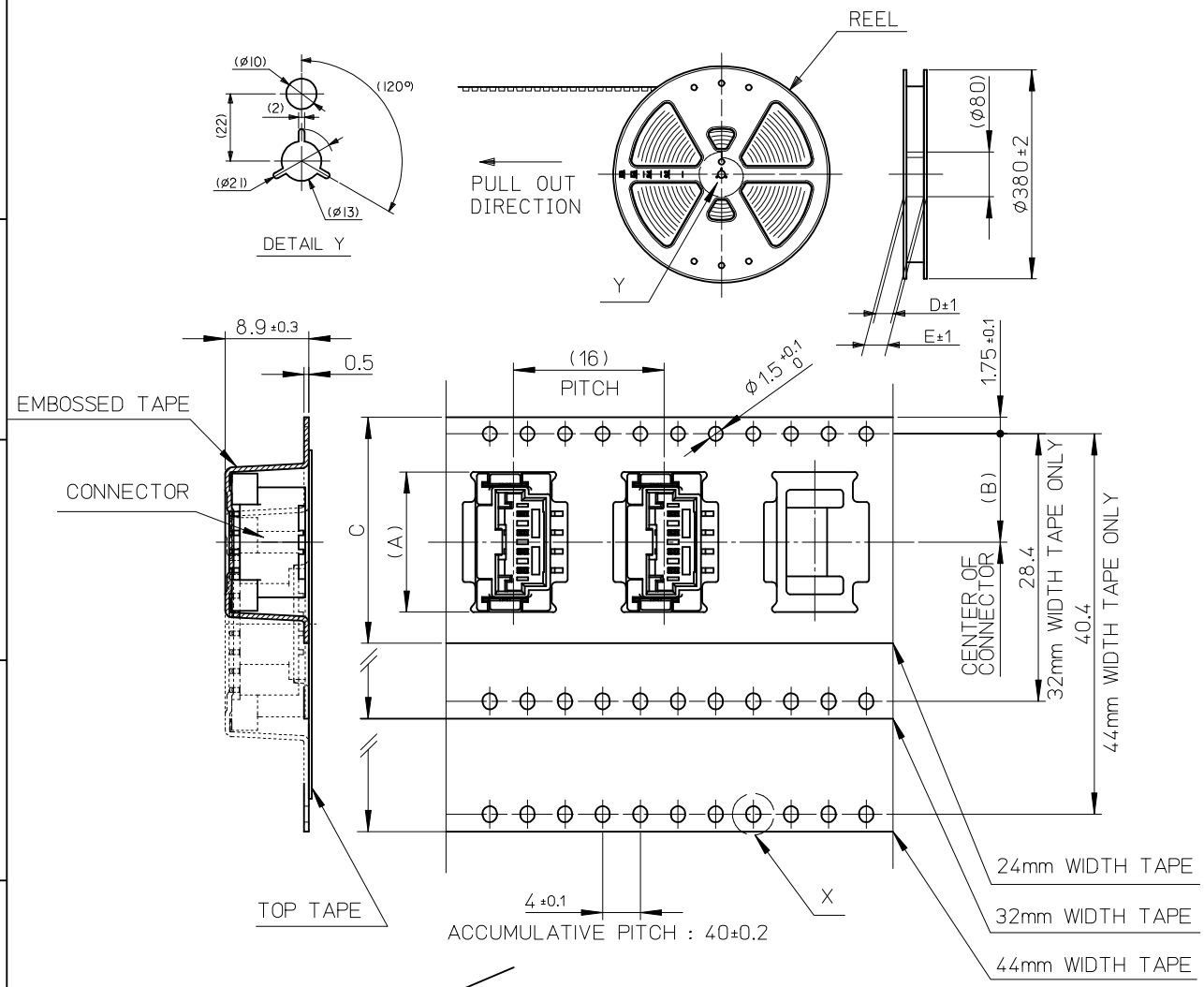

PULL OUT DIRECTION

DIRECTION OF CONNECTOR IN EMBOSSED TAPE

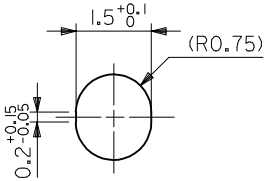

DETAIL X
(SCALE 10:1)

NOTES

1. 製品番号： 560020-***0 詳細寸法については、製品単体図面を参照ください。
   PART NO. 560020-***0 SEE SALES DRAWING FOR CONNECTOR
2. 梱包数量： 650個/REEL
   NUMBER OF CONNECTORS 650 PCS/REEL
3. リードテープ長さ
   LEAD TAPE LENGTH

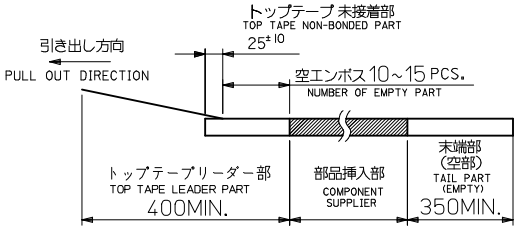

4. 材料
   MATERIAL
   キャリアテープ： ポリスチレン
   CARRIER TAPE: POLYSTYRENE
   トップテープ： PET, PE, PEF
   TOP TAPE
   リール： ポリスチレン
   REEL: POLYSTYRENE

E	D	C	(B)	(A)	エンボス梱包品 製品番号 MATERIAL NO.	CIRCUITS
49.4	45.4	44	20.2	22.9	560020-0800	08
				20.9	560020-0700	07
37.4	33.4	32	14.2	18.9	560020-0600	06
				16.9	560020-0500	05
29.4	25.4	24	11.5	14.9	560020-0400	04
				12.9	560020-0300	03
				11.2	560020-0200	02

REVISED
EC NO: JTR2014-0066
DRWN:YTAMAKI 2014/01/15
CH'KD:HKOMATSU 2014/01/15
APPR:MAYAMAMOTO 2014/02/24
DESCRIPTION
REV B

GENERAL TOLERANCES (UNLESS SPECIFIED)

10 UNDER	±0.2
10 OVER 30 UNDER	±0.25
30 OVER	±0.3
ANGULAR ±1 °	

DRAFT WHERE APPLICABLE MUST REMAIN WITHIN DIMENSIONS

DIMENSION STYLE: MM ONLY	SCALE: 2:1	DESIGN UNITS: METRIC	THIRD ANGLE PROJECTION
DRAWN BY: YTAMAKI	DATE: 2012/02/29	TITLE: 2.0MM PITCH W/B ST. WAFER ASSY EMBOSSED TAPE PACKAGE	
CHECKED BY: HKOMATSU	DATE: 2012/02/29		
APPROVED BY: MAYAMAMOTO	DATE: 2012/03/01	molex	
MATERIAL NO.: SEE CHART		DOCUMENT NO.: SD-560020-002	SHEET NO.: 1 OF 1
SIZE: A3	THIS DRAWING CONTAINS INFORMATION THAT IS PROPRIETARY TO MOLEX INCORPORATED AND SHOULD NOT BE USED WITHOUT WRITTEN PERMISSION		

tb_frame_A3_J_AM_S
Rev G 2012/01/25