THIS DRAWING IS UNPUBLISHED. RELEASED FOR PUBLICATION -,- .
© COPYRIGHT - BY TYCO ELECTRONICS CORPORATION. ALL RIGHTS RESERVED.

LOC	DIST
AJ	16

REVISIONS

P	LTR	DESCRIPTION	DATE	DWN	APVD
	AC	REVISED PER EC 0S14-0456-04	13DEC05	BL	JL

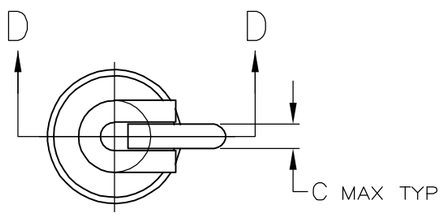

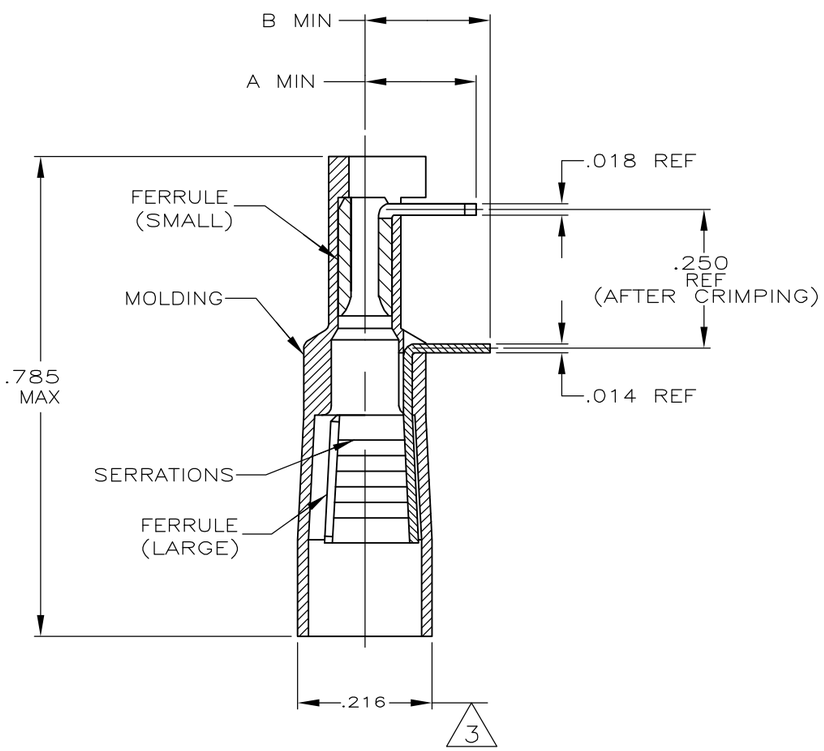

SECTION D-D

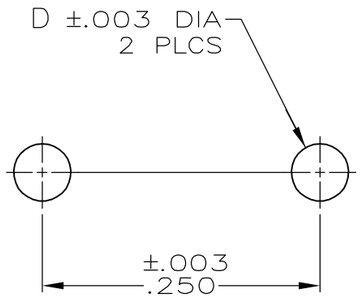

PCB LAYOUT

1. LARGE FERRULE: FOR .110 MAX DIA BRAID
2. SMALL FERRULE: FOR #26 TO #28 AWG WIRE
3. THE AVERAGE OF THE OUT OF ROUNDNESS DIMENSIONS MUST FALL WITHIN THE SPECIFIED TOLERENCE
4. MATERIAL;
   MOLDING: NYLON PER MIL-M-20693
   LARGE FERRULE: BRASS PER ASTM-B-36
   SMALL FERRULE: COPPER PER QQ-C-576
5. FINISH;
   MOLDING: COLOR-NATURAL
   LARGE FERRULE: MATTE TIN PL PER ASTM-B-545 .000040 MIN THK OVER NICKEL PL PER QQ-N-290
   SMALL FERRULE: MATTE TIN PL PER ASTM-B-545
6. INSTRUCTION SHEET NO.: 408-2469

	USE	WEIGHT	PACKAGED	D	C	B	A	ASSY NO
OBSOLETE	FOR 1/8" BOARD	.155 OZ	LOOSE PIECE	.040	.036	.260	.255	53230-5
	FOR 1/8" BOARD	.155 OZ	LOOSE PIECE	.046	.042	.260	.255	53230-3
OBSOLETE	FOR 1/16" BOARD	.148 OZ	LOOSE PIECE	.046	.042	.175	.160	53230-1

THIS DRAWING IS A CONTROLLED DOCUMENT.

DIMENSIONS: INCHES

TOLERANCES UNLESS OTHERWISE SPECIFIED:

0 PLC	± -
1 PLC	± -
2 PLC	± -
3 PLC	± .008
4 PLC	± -
ANGLES	± 5'

MATERIAL 4

FINISH 5

DWN	-	1/10/92
CHK	D. DOYE	1/23/92
APVD	D. DOYE	1/23/92
PRODUCT SPEC	—	
APPLICATION SPEC	—	
WEIGHT	—	

CUSTOMER DRAWING

tyco Electronics

Tyco Electronics Corporation
Harrisburg, PA 17105-3608

NAME
TERMASHIELD ASSY,PRE-INSULATED, FUNNEL ENTRY
—

SIZE	CAGE CODE	DRAWING NO	RESTRICTED TO
A3	00779	C-53230	—

SCALE	SHEET	REV
1:1	1 OF 1	AC