Thermal Overcurrent Circuit Breaker 1410-L2/G1

Description

Single pole press-to-reset thermal circuit breaker with extremely fast overload switching performance (R-type TO CBE to EN 60934). Single hole threadneck, PCB or integral mounting with a choice of designs. Miniaturised construction minimises PCB real estate required. Type 1410-L2 and 1410-G1 versions feature changeover contacts suitable for providing status output signals. Largely temperature-insensitive.

Typical applications

Motors, transformers, solenoids, PCBs, hand-held machines, appliances, instrumentation.

Ordering information

Type No.

1410 single pole circuit breaker

Mounting
- **L2** PCB mounting or integral mounting 10.15 x 7.62
- **G1** threadneck panel mounting or PCB mounting

Number of poles
- **1** 1-pole, thermally protected

Hardware
- **0** without
- **1** with hexnut and knurled nut (only1410-G), bulk shipped with 5 pcs plus

Terminal design
- **L2** solder pins 1x0.8 silver-plated
- **P2** blade terminals DIN 46244-A2.8-0.8 silver-plated (only -G)

Characteristic curve
- **F1** fast acting

Actuator, type and colour
- **S01** reset button, black (1410-G)
- **S02** reset slide, white (1410-L2)

Current ratings
- **0.63...10 A**

1410 - L2 1 0 - L2 F1 - S 02 - 0.8 A ordering example

Preferred types

Preferred types	Standard current ratings (A)										
	0.63	1	1.5	2	2.25	3.15	4	6.3	8	10	
1410-G110-L2F1-S01-	x	x	x	x	x	x	x	x	x	x	
	0.63	1	1.25	1.5	2	3.15	4	4.5	6.3	8	10
1410-G111-P2F1-S01-	x	x	x	x	x	x	x	x	x	x	x
	0.63	1	1.25	1.5	2	3.15	4	4.5	5	8	10
1410-L210-L2F1-S02-	x	x	x	x	x	x	x	x	x	x	x

Standard current ratings and typical internal resistance values

Current rating (A)	Internal resistance (Ω)	Current rating (A)	Internal resistance (Ω)
0.63	1.8	4	< 0.1
0.8	1.7	4.5	< 0.1
1	1.3	5	< 0.1
1.5	< 1	6.3	< 0.1
2	< 1	8	< 0.1
2.25	< 0.15	10	< 0.1
3.15	< 0.12		

1410-L2... **1410-G1...**

Technical data

For further details please see chapter: Technical Information

Voltage rating	AC 240 V; DC 28 V (UL: AC 250 V; DC 50 V)
Current rating range 1-2	0.63...10 A
Auxiliary circuit 1-3	0.2 x I_N max. 1 A, AC 250 V
Typical life AC 240 V: 0.63...2.25 A 2.5...10 A DC 50 V: 0.63...2.25 A DC 28 V: 2.5...10 A	 500 break operations at 2 x I_N, inductive 500 break operations at 2 x I_N, resistive 500 break operations at 2 x I_N, inductive 500 break operations at 2 x I_N, inductive
Ambient temperature	-20...+70 °C (-4...+158 °F)
Insulation co-ordination (IEC 60664 and 60664 A)	rated impulse withstand voltage 2.5 kV; pollution degree 2 reinforced insulation in operating area
Dielectric strength (IEC 60664 and 60664A) operating area	test voltage AC 1,500 V
Insulation resistance	> 100 MΩ (DC 500 V)
Interrupting capacity I_{cn} (o-o-o)	0.63...2 A: 12 x I_N 2.5...8 A: 8 x I_N, AC max. 50 A 10 A: 6 x I_N, AC 3.15...10 A: 10 x I_N, DC
Interrupting capacity (UL 1077)	0.63...10 A 2,000 A AC 250 V 0.63...10 A 200 A DC 50 V
Degree of protection (IEC 60529/DIN 40050)	operating area IP40 terminal area IP00
Vibration	8 g (57-500 Hz) ± 0.61 mm (10-57 Hz), to IEC 60068-2-6, test Fc, 10 frequency cycles/axis
Shock	20 g (11 ms) to IEC 60068-2-27, test Ea
Corrosion	48 hours at 5 % salt mist, to IEC 60068-2-11, test Ka
Humidity	96 hours at 95 % RH to IEC 60068-2-78, test Cab
Mass	approx. 5 g

Approvals

Authority	Standard	Rated voltage	Current ratings
VDE	IEC/EN 60934	AC 240 V DC 50 V DC 28 V	0.63 A...10 A 0.63 A...2.25 A 2.5 A...10 A
UL	UL 1077	AC 250 V DC 50 V	0.63 A...10 A 0.63 A...10 A
CSA	C22.2 No 235	AC 250 V DC 50 V	0.63 A...10 A 0.63 A...10 A

Dimensions

1410-L210-L2F1-S02

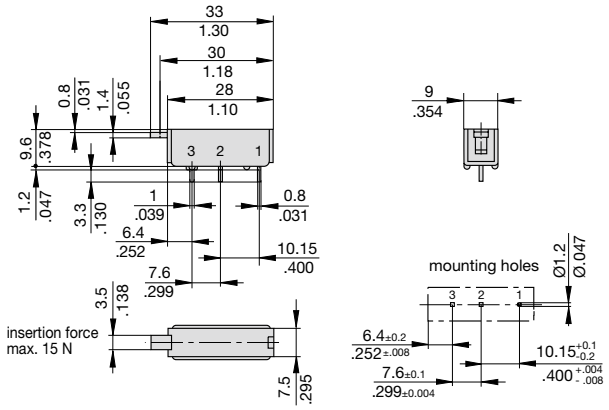

1410-G111-P2F1-S01

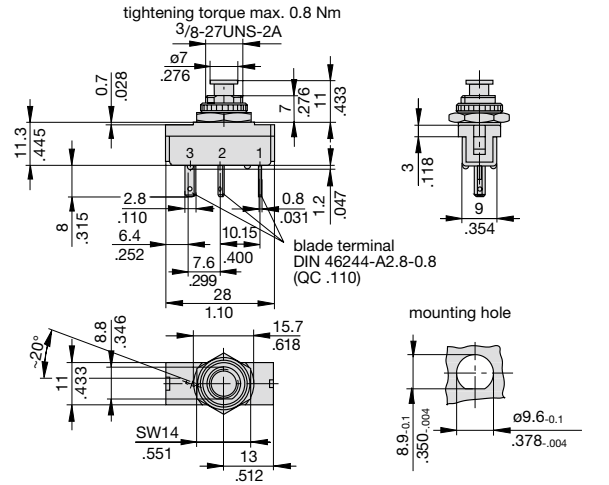

1410-G110-P2F1-S01

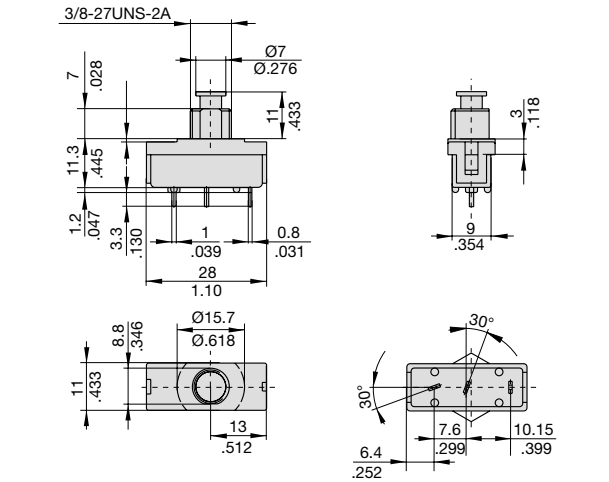

Typical time/current characteristics at +23 °C/+73.4 °F

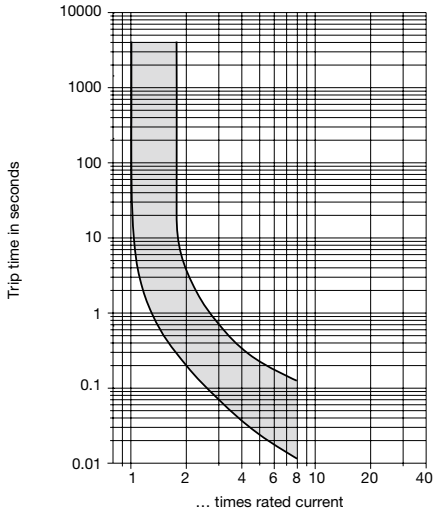

Installation drawings

1410-L2...

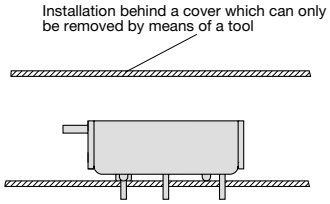

1410-G...

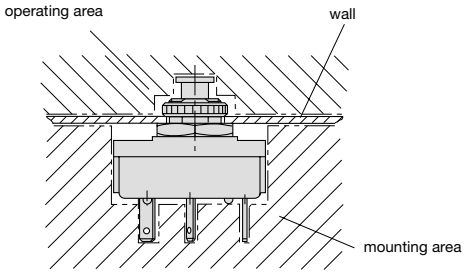

This is a metric design and millimeter dimensions take precedence ($\frac{mm}{inch}$)

Accessory

Knurled nut 3/8"
plastic
Y 307 117 02

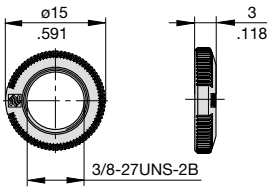

Hex nut 3/8"
nickel-plated brass
Y 300 192 01

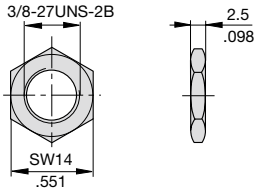

Internal connection diagram

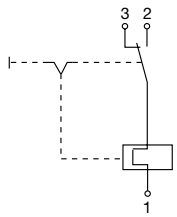

All dimensions without tolerances are for reference only. In the interest of improved design, performance and cost effectiveness the right to make changes in these specifications without notice is reserved.Product markings may not be exactly as the ordering codes. Errors and omissions excepted.