PART NAME	PLASTICASE (STYLE D)	PART No.	PC-11482 & PC-11482-A & PC-11482-LG & PC-11482-LGA	REV. DATE	12-9-10

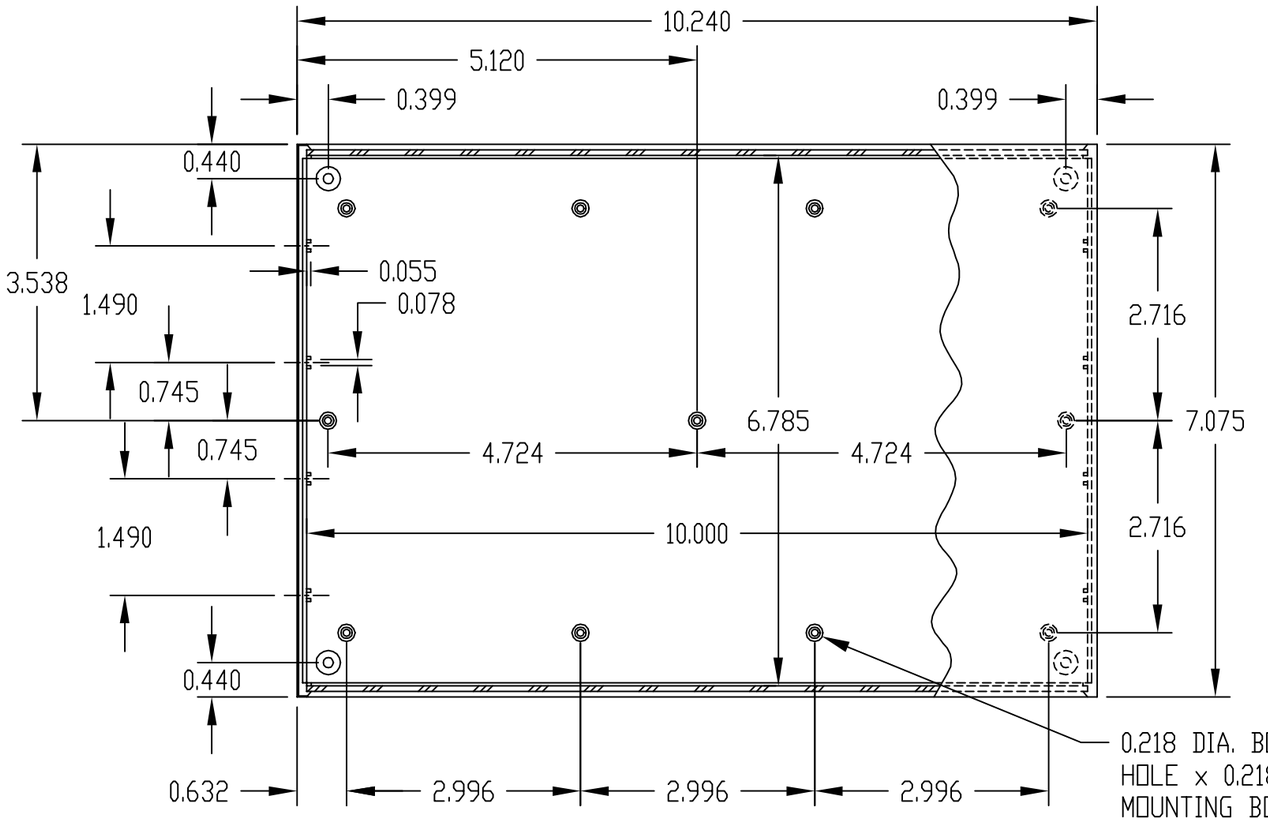

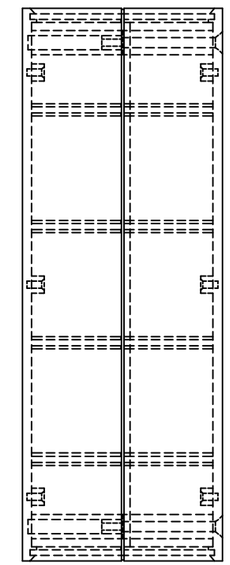

MATERIAL & FINISH:

(NO SUFFIX) UL94V-0 FLAME RETARDANT ABS
DARK GRAY PLASTIC COVERS WITH
LIGHT GRAY PLASTIC PANELS.

(SUFFIX -A) UL94V-0 FLAME RETARDANT ABS
DARK GRAY PLASTIC COVERS WITH
NATURAL FINISH ALUMINUM PANELS.

(SUFFIX -LG) HIGH-IMPACT ABS
LIGHT GRAY PLASTIC COVERS WITH
BLACK PLASTIC PANELS.

(SUFFIX -LGA) HIGH-IMPACT ABS
LIGHT GRAY PLASTIC COVERS WITH
NATURAL FINISH ALUMINUM PANELS.

FOUR (4) M3 x 1.750" LG. SCREWS
SUPPLIED FOR ASSEMBLY.

FOUR (4) RUBBER SELF-ADHESIVE
FEET SUPPLIED.

NOTE: ALL DIMENSIONS HAVE ±0.015 TOLERANCE
UNLESS OTHERWISE SPECIFIED.
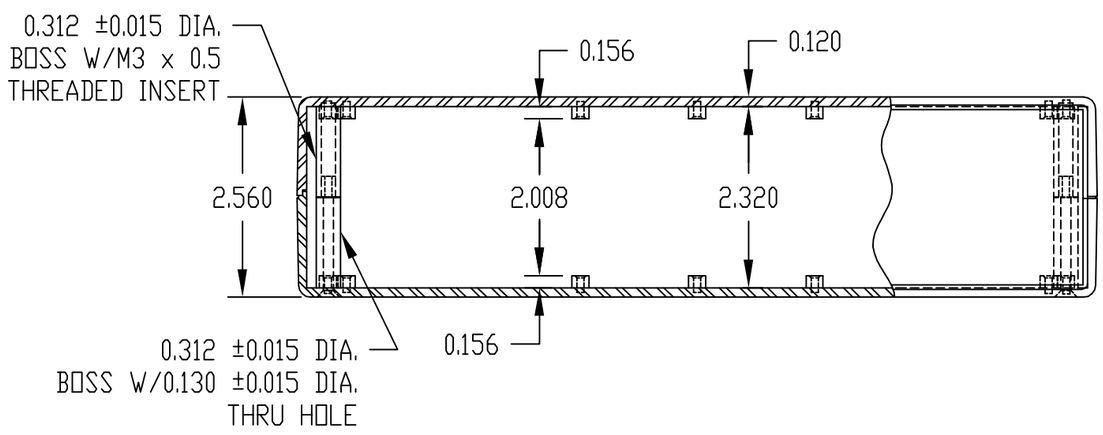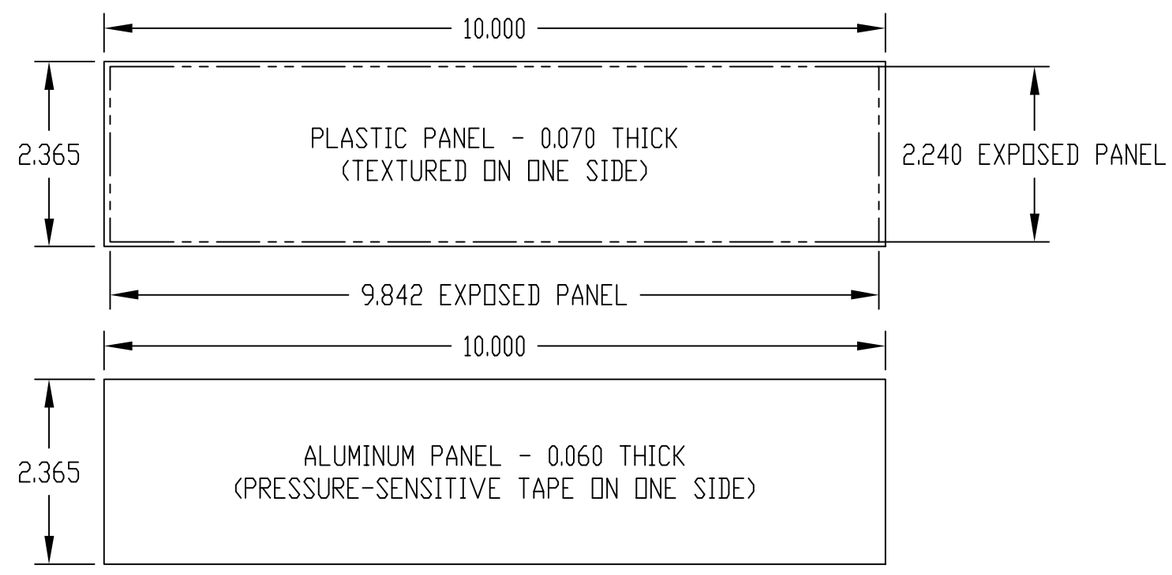
0.218 DIA. BOSS WITH 0.090 DIA.
HOLE x 0.218 DEEP - (22) PLACES
MOUNTING BOSSES USE EITHER M2.5 METRIC
OR #4 STD. SHEET METAL SCREWS x 0.188" LG.
(NOT SUPPLIED)