THIS DRAWING IS UNPUBLISHED. RELEASED FOR PUBLICATION -,- .
© COPYRIGHT - By - ALL RIGHTS RESERVED.

REVISIONS

P	LTR	DESCRIPTION	DATE	DWN	APVD
	K5	REVISED PER ECO-15-016493	28NOV2015	NK	DR

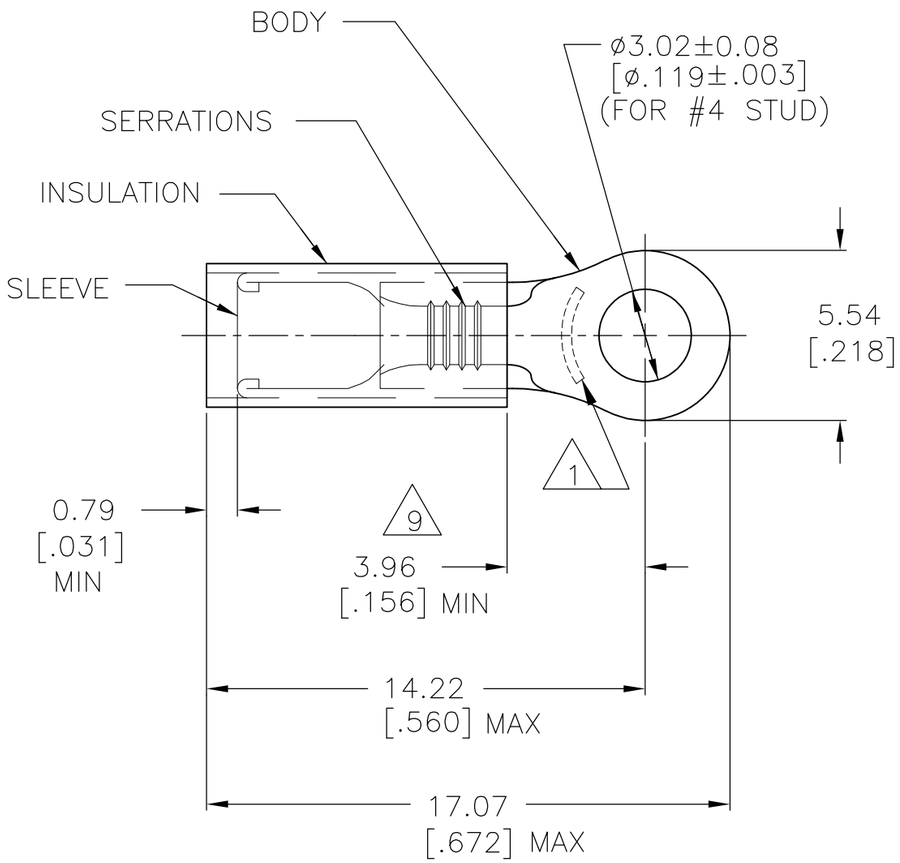

AMP
WIRE RANGE

18-16 AWG
STRANDED ONLY

1. STAMP "AMP 18-16*" APPROX AS SHOWN
2. FOR 1.40[.055] TO 3.43[.135] WIRE INSULATION DIA.
3. TONGUE MATERIAL THK: 0.79±0.05 [.031±.002]
4. BODY: MATERIAL: COPPER ASTM B152
   FINISH: NICKEL PL. SAE AMS QQ-N-290
   0.0076 [.0003] AVG EXT THK.
5. SLEEVE: MATERIAL: COPPER ASTM B152
   FINISH: NICKEL PL. SAE AMS QQ-N-290
   0.0076 [.0003] AVG EXT THK.
6. INSULATION: MATERIAL: PTFE (ASTM D3295)
   COLOR: ORANGE
7. PRELIMINARY - NOT FOR PRODUCTION
8. INSULATION: PVDF
   COLOR: ORANGE
9. DIMENSION APPLIES FROM EDGE OF METAL WIRE BARREL TO CENTER OF STUD HOLE

QTY	PACKAGE TYPE	PART NO.
8 1000	LOOSE PIECE	7 50834-4
6 5000	ON TAPE	7 50834-1
6 1000	LOOSE PIECE	50834

AMP INCORPORATED
CUSTOMER SERVICE SYSTEMS

FOR ADDITIONAL PRODUCT INFORMATION OR COPIES OF DRAWINGS AND TECHNICAL DOCUMENTS	PRODUCT INFORMATION CENTER 1-800-522-6752
FOR APPLICATION TOOLING INFORMATION	TOOLING ASSISTANCE CENTER 1-800-722-1111
FOR ORDER ENTRY	1-800-526-5142

MAX RECOMMENDED OPERATING TEMPERATURE: 288°C [550° F]

VOLTAGE RATING: 300V MAX

CIRCULAR MIL AREA: 0.81-1.42mm² [1600-2800] STRANDED WIRE ONLY

THIS DRAWING IS A CONTROLLED DOCUMENT.

DIMENSIONS: mm [INCHES]

TOLERANCES UNLESS OTHERWISE SPECIFIED:
0 PLC ± -
1 PLC ± -
2 PLC ± 0.20[.008]
3 PLC ± -
4 PLC ± -
ANGLES ± -

MATERIAL 4 5 6 8
FINISH 4 5 6 8

DWN	JR RUTH	05JAN99
CHK	RE HERSEY	05JAN99
APVD	T MICHIELUTTI	05JAN99
PRODUCT SPEC	—	
APPLICATION SPEC	—	
WEIGHT	—	

TE Connectivity

NAME: TERMINAL, PIDG , STRATO-THERM, RING TONGUE, WIRE SIZE: 18-16
—

SIZE	CAGE CODE	DRAWING NO	RESTRICTED TO
A3	00779	C-50834	—

CUSTOMER DRAWING | SCALE 5:1 | SHEET 1 OF 1 | REV K5

1470-19 (1/15)