THIS DRAWING IS UNPUBLISHED. RELEASED FOR PUBLICATION -,- .
© COPYRIGHT - By - ALL RIGHTS RESERVED.

LOC	DIST
AF	50

REVISIONS

P	LTR	DESCRIPTION	DATE	DWN	APVD
	D	REVISED PER ECR-13-005733	26AUG2013	KH	PD

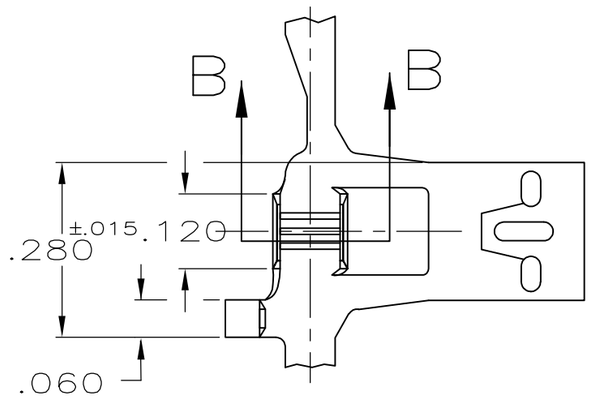

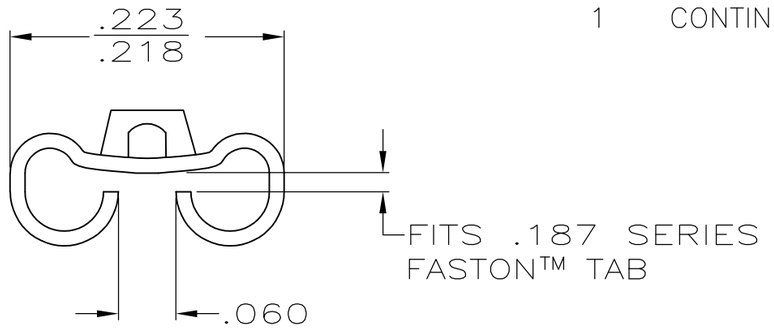

VIEW A-A
SCALE 8:1

1 CONTINUOUS STRIP ON REEL

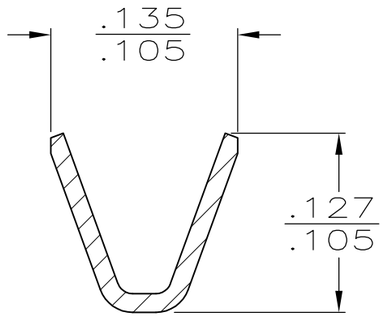

SECTION B-B
SCALE 8:1

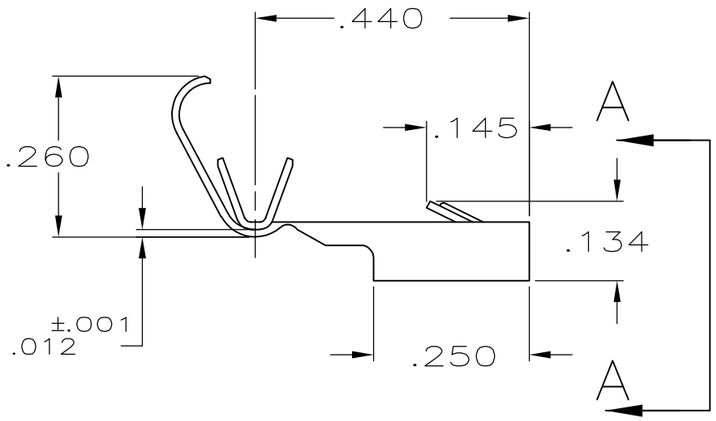

.060-.110	20-16	.020	63509-1
INSULATION RANGE	WIRE SIZE	MATING TAB THK ±.001	PART NO

0	.140	.188	F	.090	.057	16
					.050	18
					.045	20
TYPE	WIDTH	STRIP LENGTH ±.015	TYPE	WIDTH	±.002 HEIGHT	WIRE
INSUL BARREL CRIMP		WIRE BARREL CRIMP				

THIS DRAWING IS A CONTROLLED DOCUMENT.

DIMENSIONS: INCHES

TOLERANCES UNLESS OTHERWISE SPECIFIED:
0 PLC ±-
1 PLC ±-
2 PLC ±-
3 PLC ±.010
4 PLC ±-
ANGLES ±-

MATERIAL: BRASS

FINISH: PRE-TIN .000030 MIN

DWN	JR RUTH	8/5/88
CHK	MS FEHER	8/5/88
APVD	J GILLESPIE	8/5/88
PRODUCT SPEC	—	
APPLICATION SPEC	—	
WEIGHT	—	

TE Connectivity

NAME: RECEPTACLE, FASTIN-FASTON, FLAG, .187 SERIES

SIZE	CAGE CODE	DRAWING NO	RESTRICTED TO
A3	00779	C-63509	—

CUSTOMER DRAWING | SCALE 4:1 | SHEET 1 OF 1 | REV D

1470-19 (3/11)