THIS DRAWING IS UNPUBLISHED. RELEASED FOR PUBLICATION - ,- .
© COPYRIGHT - By - ALL RIGHTS RESERVED.

LOC	DIST
GP	00

REVISIONS

P	LTR	DESCRIPTION	DATE	DWN	APVD
	F1	REVISED PER ECO-11-004835	11MAR11	RK	HMR

1. 20 POSITION CONNECTOR ASSEMBLY SHOWN.
2. MOLDED PARTS: THERMOPLASTIC, UL94V-0 RATED, COLOR BLACK. CONTACTS: PHOSPHOR BRONZE.
3. CONTACTS: 0.00038[.000015] MIN GOLD ON MATING AREA, GOLD FLASH ON TERMINATION END, ALL OVER 0.00127[.000050] MIN NICKEL ON ENTIRE CONTACT.
4. POLARIZER FEATURE DOES NOT EXIST ON POSITION #1 END FOR 14 POSITION ASSEMBLIES AND SMALLER.
5. POLARIZER FEATURE DOES NOT EXIST ON THIS END FOR 6 POSITION ASSEMBLIES.
6. FOR TERMINATION OF 26 OR 28 AWG STRANDED OR SOLID PVC INSULATED FLAT RIBBON CABLE. SEE TE CONNECTIVITY DRAWINGS 57034 (26 AWG) OR 57040 (28 AWG) FOR DETAILS.
7. STRAIN RELIEF PACKAGED SEPARATELY AND SHIPPED WITH ASSEMBLY.

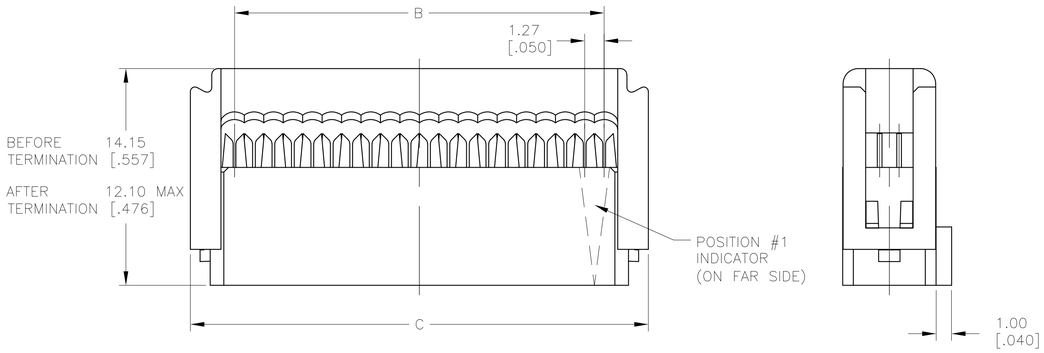

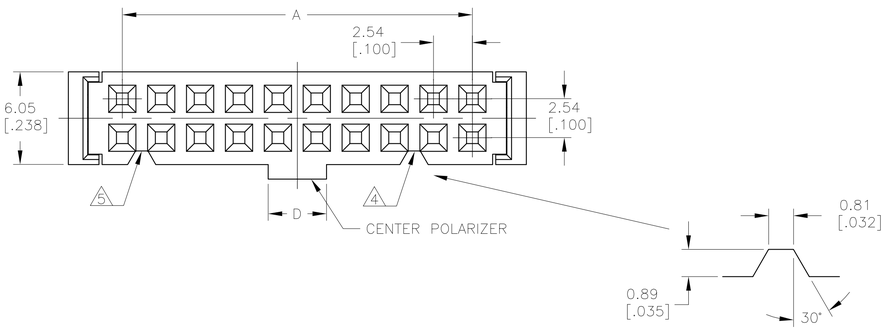

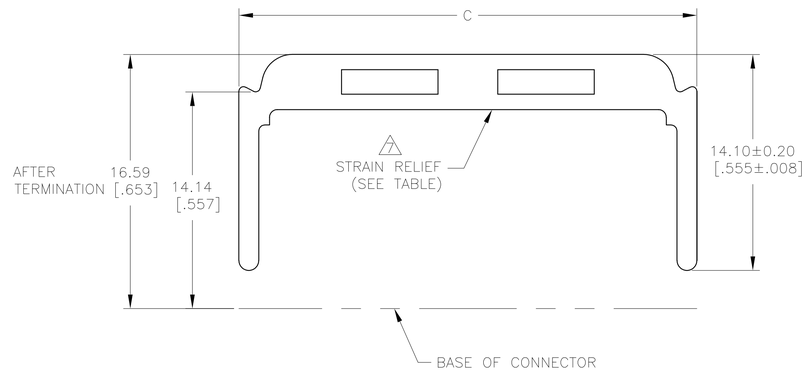

STYLE 1

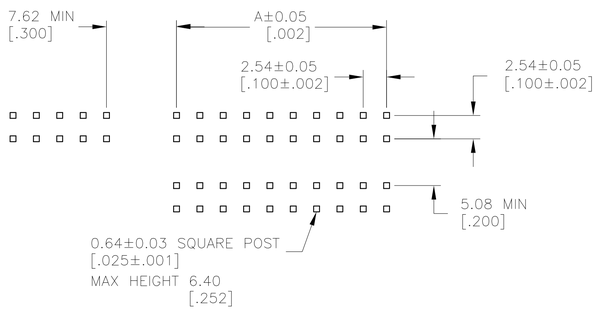

POST LAYOUT

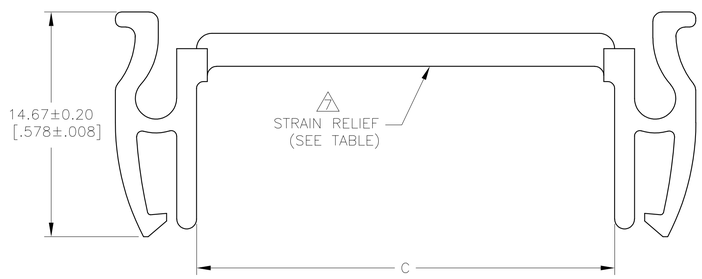

STYLE 2

	STRAIN RELIEF TYPE	D	C	B	A	NUMBER OF POSITIONS	T&B PART NUMBER (REFERENCE)	PART NUMBER
	STYLE 2	3.80[.150]	22.22[.875]	19.05[.750]	17.78[.700]	16	636-1641LSLF	2-1658528-7
OBSOLETE	STYLE 2	3.80[.150]	19.68[.775]	16.51[.650]	15.24[.600]	14	636-1441LSLF	2-1658528-6
	STYLE 2	3.20[.126]	14.60[.575]	11.43[.450]	10.16[.400]	10	636-1041LSLF	2-1658528-5
	STYLE 2	1.90[.075]	9.52[.375]	6.35[.250]	5.08[.200]	6	636-0641LSLF	2-1658528-4
	STYLE 1	3.80[.150]	85.78[3.377]	80.01[3.150]	78.74[3.100]	64	636-6441LF	2-1658528-3
	NONE	3.80[.150]	85.78[3.377]	80.01[3.150]	78.74[3.100]	64	636-6430LF	2-1658528-2
OBSOLETE	STYLE 1	3.80[.150]	80.70[3.177]	74.93[2.950]	73.66[2.900]	60	636-6041LF	1658528-9
OBSOLETE	NONE	3.80[.150]	80.70[3.177]	74.93[2.950]	73.66[2.900]	60	636-6030LF	2-1658528-1
	STYLE 1	3.80[.150]	68.00[2.677]	62.23[2.450]	60.95[2.400]	50	636-5041LF	1658528-8
	NONE	3.80[.150]	68.00[2.677]	62.23[2.450]	60.95[2.400]	50	636-5030LF	2-1658528-0
	STYLE 1	3.80[.150]	55.30[2.177]	49.53[[1.950]	48.26[1.900]	40	636-4041LF	1-1658528-9
	NONE	3.80[.150]	55.30[2.177]	49.53[[1.950]	48.26[1.900]	40	636-4030LF	1658528-7
	STYLE 1	3.80[.150]	47.68[1.877]	41.91[1.650]	40.64[1.600]	34	636-3441LF	1658528-6
	NONE	3.80[.150]	47.68[1.877]	41.91[1.650]	40.64[1.600]	34	636-3430LF	1-1658528-8
	STYLE 1	3.80[.150]	37.52[1.477]	31.75[1.250]	30.48[1.200]	26	636-2641LF	1658528-5
	NONE	3.80[.150]	37.52[1.477]	31.75[1.250]	30.48[1.200]	26	636-2630LF	1-1658528-7
	NONE	3.80[.150]	34.98[1.377]	29.21[1.150]	27.94[1.100]	24	636-2430LF	1-1658528-6
	STYLE 1	3.80[.150]	29.90[1.177]	24.13[.950]	22.86[.900]	20	636-2041LF	1658528-4
	NONE	3.80[.150]	29.90[1.177]	24.13[.950]	22.86[.900]	20	636-2030LF	1-1658528-5
OBSOLETE	STYLE 1	3.80[.150]	24.82[.977]	19.05[.750]	17.78[.700]	16	636-1641LF	1658528-3
	NONE	3.80[.150]	24.82[.977]	19.05[.750]	17.78[.700]	16	636-1630LF	1-1658528-4
OBSOLETE	STYLE 1	3.80[.150]	22.28[.877]	16.51[.650]	15.24[.600]	14	636-1441LF	1-1658528-3
	NONE	3.80[.150]	22.28[.877]	16.51[.650]	15.24[.600]	14	636-1430LF	1-1658528-2
	STYLE 1	3.20[.126]	17.20[.677]	11.43[.450]	10.16[.400]	10	636-1041LF	1658528-2
	NONE	3.20[.126]	17.20[.677]	11.43[.450]	10.16[.400]	10	636-1030LF	1-1658528-1
OBSOLETE	STYLE 1	1.90[.075]	12.12[.477]	6.35[.250]	5.08[.200]	6	636-0641LF	1658528-1
	NONE	1.90[.075]	12.12[.477]	6.35[.250]	5.08[.200]	6	636-0630LF	1-1658528-0

ELECTRICAL PROPERTIES	
CURRENT RATING	1 AMP
INSULATION RESISTANCE	>1 x 10^9 OHMS @ 500 VDC
DWV	>500 VRMS AT SEA LEVEL
ENVIRONMENTAL PROPERTIES	
TEMPERATURE RATING	-55°C TO 125°C

THIS DRAWING IS A CONTROLLED DOCUMENT.

DIMENSIONS: INCHES

TOLERANCES UNLESS OTHERWISE SPECIFIED:
0 PLC ± -
1 PLC ± -
2 PLC ± -
3 PLC ± 0.13[.005]
4 PLC ± -
ANGLES ± -

MATERIAL 2
FINISH 3

DWN J.GERACE 17SEP04
CHK C.ROHDE 17SEP04
APVD M.WALMSLEY 17SEP04
PRODUCT SPEC —
APPLICATION SPEC —
WEIGHT —

TE Connectivity

NAME CONNECTOR ASSEMBLY, FEMALE SOCKET TRANSITION, 636 SERIES

SIZE A1 | CAGE CODE 00779 | DRAWING NO C-1658528 | RESTRICTED TO —

CUSTOMER DRAWING | SCALE 5:1 | SHEET 1 OF 1 | REV F1

4805 (3/11)