THIS DRAWING IS UNPUBLISHED. RELEASED FOR PUBLICATION - ,- .
© COPYRIGHT - By - ALL RIGHTS RESERVED.

LOC	DIST
—	—

REVISIONS

P	LTR	DESCRIPTION	DATE	DWN	APVD
	N	REV PER ECO-15-016062	10NOV15	KG	CD

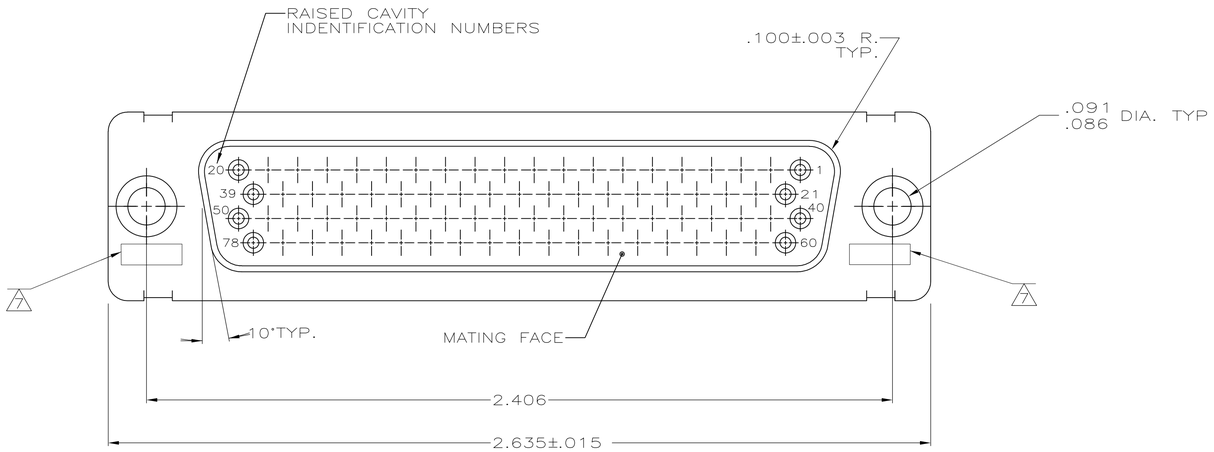

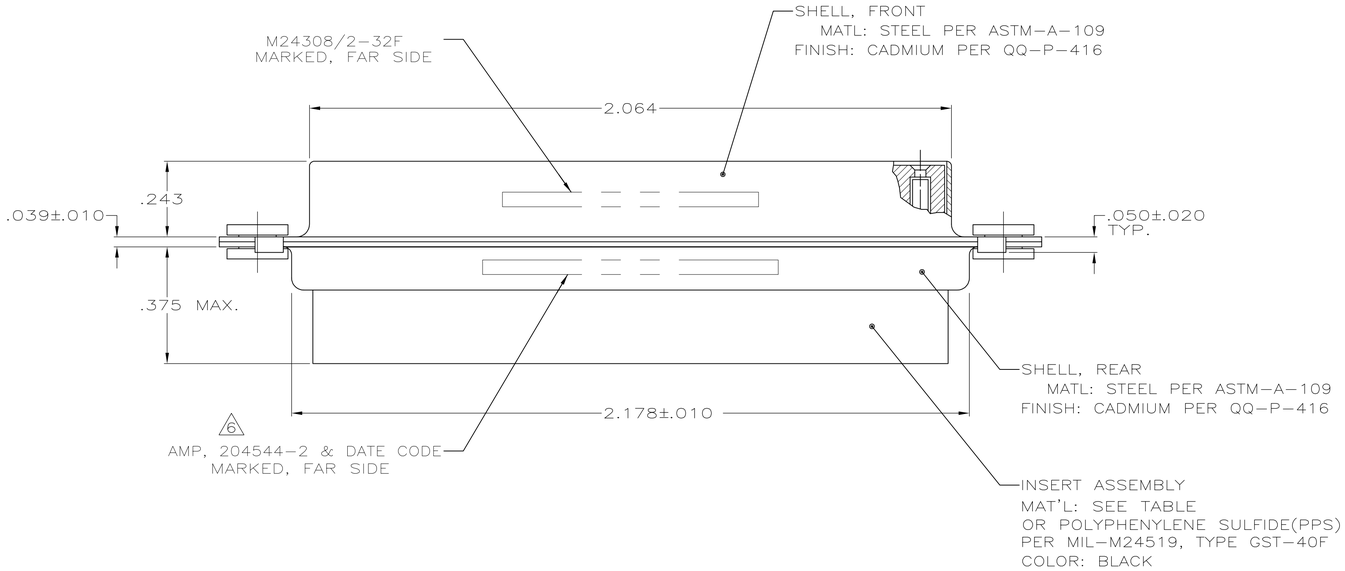

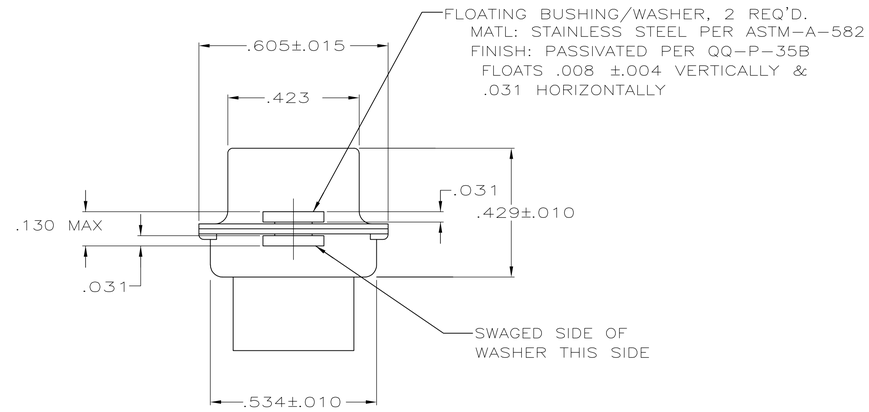

1. THIS RCPT. IS DESIGNED TO CONFORM TO THE LATEST ISSUE OF MIL-C-24308
2. MAX WIRE INSUL TO BE USED WITH THIS RCPT IS .054 DIA
3. METAL RETENTION CLIPS ARE INCLUDED IN INSERTS
4. PACKAGE MARKED M 24308/2-301F
5. THIS RCPT. WILL ACCEPT SIZE 22 SOCKET CONTACT M 24308/12 OR AMP # 204351

6 AMP PART NO. MARKED ON CONNECTOR REPRESENTS KIT NUMBER WITH CONTACTS

7 UL/CSA DESIGNATION MARKED IN THIS AREA,OPTIONAL

THIS DRAWING IS A CONTROLLED DOCUMENT.

DIMENSIONS: INCHES

TOLERANCES UNLESS OTHERWISE SPECIFIED:
0 PLC ± –
1 PLC ± –
2 PLC ± –
3 PLC ± .005
4 PLC ± –
ANGLES ± 0°30'

MATERIAL: SEE CALLOUTS
FINISH: SEE CALLOUTS

DWN C.C. THOMAS 12-4-87
CHK F.C. BALLEW 1-25-88
APVD F.C. BALLEW 1-25-88
PRODUCT SPEC —
APPLICATION SPEC —
WEIGHT —

TE Connectivity

NAME: AMPLIMITE RCPT. FOR SOCKET CONTACTS HI DENSITY D CONNECTOR, SIZE 5, 78 POSN., SERIES 90 WITH FLOAT BUSHINGS

SIZE	CAGE CODE	DRAWING NO	RESTRICTED TO
A1	00779	C-204532	—

CUSTOMER DRAWING | SCALE 4:1 | SHEET 1 OF 1 | REV N

4805 (3/11)