THIS DRAWING IS UNPUBLISHED. RELEASED FOR PUBLICATION - ,- .
© COPYRIGHT - By - ALL RIGHTS RESERVED.

| LOC | DIST |
|---|---|
| AD | 00 |

REVISIONS

| P | LTR | DESCRIPTION | DATE | DWN | APVD |
|---|---|---|---|---|---|
| | H2 | REVISED PER ECO-11-004917 | 11MAR11 | RK | HMR |

1. TRUE POSITION TOLERANCE OF POST TIPS APPLIES WHEN HEADERS ARE HELD FLAT AGAINST POINTED CIRCUIT BOARD.

2. OBSOLETE PART NUMBER

3. .000100-.000200 BRIGHT TIN OVER .000050-.000100 NICKEL.

4. .000100-.000200 BRIGHT TIN-LEAD OVER .000050-.000100 NICKEL.

5. PRELIMINARY PART

6. .000100-.000200 MATTE TIN OVER .000050 NICKEL.

7. OBSOLETE PARTS: OBSOLETE CIS STREAMLINING PER D.RENAUD/D.SINISI

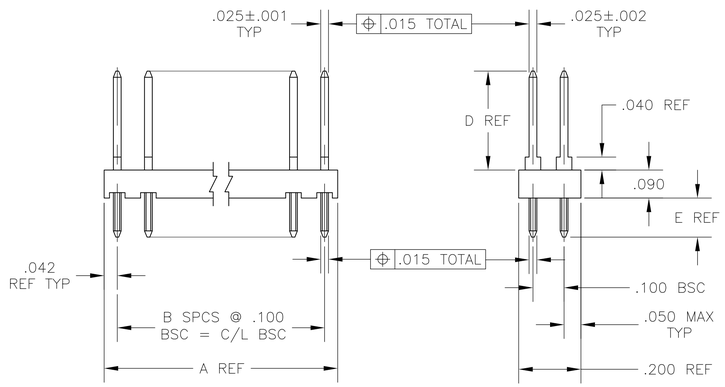


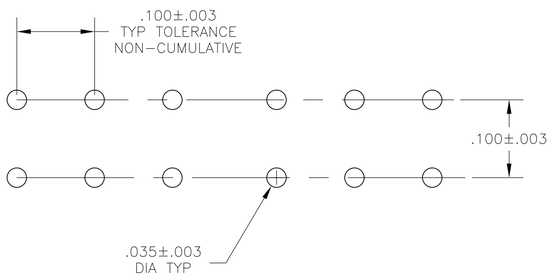


RECOMMENDED HOLE LAYOUT

| | FINISH | E | D | C | B | A | NO OF POSN | PART NUMBER |
|---|---|---|---|---|---|---|---|---|
| | 6 | .125 | .318 | 3.900 | 39 | 3.984 | 80 | 9-87543-0 |
| | 6 | .125 | .318 | 2.400 | 24 | 2.484 | 50 | 7-87543-5 |
| 7 OBSOLETE | 6 | .125 | .318 | 1.900 | 19 | 1.984 | 40 | ~~7-87543-0~~ |
| 7 OBSOLETE | 6 | .125 | .318 | 1.600 | 16 | 1.684 | 34 | ~~6-87543-7~~ |
| 7 OBSOLETE | 6 | .125 | .318 | 1.400 | 14 | 1.484 | 30 | ~~6-87543-5~~ |
| | 6 | .125 | .318 | 1.200 | 12 | 1.284 | 26 | 6-87543-3 |
| 7 OBSOLETE | 6 | .125 | .318 | 1.000 | 10 | 1.084 | 22 | ~~6-87543-1~~ |
| | 6 | .125 | .318 | .900 | 9 | .984 | 20 | 6-87543-0 |
| | 6 | .125 | .318 | .700 | 7 | .784 | 16 | 5-87543-8 |
| | 6 | .125 | .318 | .600 | 6 | .684 | 14 | 5-87543-7 |
| | 6 | .125 | .318 | .500 | 5 | .584 | 12 | 5-87543-6 |
| | 6 | .125 | .318 | .400 | 4 | .484 | 10 | 5-87543-5 |
| 7 OBSOLETE | 6 | .125 | .318 | .300 | 3 | .384 | 8 | ~~5-87543-4~~ |
| | 6 | .125 | .318 | .200 | 2 | .284 | 6 | 5-87543-3 |
| | 6 | .125 | .318 | – | – | .084 | 2 | 5-87543-1 |
| | 3 | .125 | .318 | .500 | 5 | .584 | 12 | 5 4-87543-3 |
| | 4 | .125 | .318 | 4.100 | 41 | 4.184 | 80 | 2 4-87543-2 |
| | | .125 | .318 | 4.000 | 40 | 4.084 | 80 | 2 4-87543-1 |
| | | .125 | .318 | 3.900 | 39 | 3.984 | 80 | 4-87543-0 |
| | | .125 | .318 | 3.800 | 38 | 3.884 | 78 | 2 3-87543-9 |
| | | .125 | .318 | 3.700 | 37 | 3.784 | 76 | 2 3-87543-8 |
| | | .125 | .318 | 3.600 | 36 | 3.684 | 74 | 2 3-87543-7 |
| | | .125 | .318 | 3.500 | 35 | 3.584 | 72 | 2 3-87543-6 |
| SUPERCEDED BY 3-103322-5 | | .125 | .318 | 3.400 | 34 | 3.484 | 70 | 3-87543-5 |
| | | .125 | .318 | 3.300 | 33 | 3.384 | 68 | 2 3-87543-4 |
| | | .125 | .318 | 3.200 | 32 | 3.284 | 66 | 2 3-87543-3 |
| SUPERCEDED BY 3-103322-2 | | .125 | .318 | 3.100 | 31 | 3.184 | 64 | 3-87543-2 |
| | | .125 | .318 | 3.000 | 30 | 3.084 | 62 | 2 3-87543-1 |
| SUPERCEDED BY 3-103322-0 | | .125 | .318 | 2.900 | 29 | 2.984 | 60 | 3-87543-0 |
| SUPERCEDED BY 2-103322-5 | | .125 | .318 | 2.800 | 28 | 2.884 | 58 | 2-87543-9 |
| | | .125 | .318 | 2.700 | 27 | 2.784 | 56 | 2 2-87543-8 |
| | | .125 | .318 | 2.600 | 26 | 2.684 | 54 | 2 2-87543-7 |
| | | .125 | .318 | 2.500 | 25 | 2.584 | 52 | 2 2-87543-6 |
| | | .125 | .318 | 2.400 | 24 | 2.484 | 50 | 2-87543-5 |
| | | .125 | .318 | 2.300 | 23 | 2.384 | 48 | 2 2-87543-4 |
| | | .125 | .318 | 2.200 | 22 | 2.284 | 46 | 2 2-87543-3 |
| | | .125 | .318 | 2.100 | 21 | 2.184 | 44 | 2 2-87543-2 |
| SUPERCEDED BY 2-103322-1 | | .125 | .318 | 2.000 | 20 | 2.084 | 42 | 2-87543-1 |
| 7 OBSOLETE | | .125 | .318 | 1.900 | 19 | 1.984 | 40 | ~~2-87543-0~~ |
| | | .125 | .318 | 1.800 | 18 | 1.884 | 38 | 2 1-87543-9 |
| | | .125 | .318 | 1.700 | 17 | 1.784 | 36 | 2 1-87543-8 |
| | | .125 | .318 | 1.600 | 16 | 1.684 | 34 | 1-87543-7 |
| SUPERCEDED BY 1-103322-6 | | .125 | .318 | 1.500 | 15 | 1.584 | 32 | 1-87543-6 |
| 7 OBSOLETE | | .125 | .318 | 1.400 | 14 | 1.484 | 30 | ~~1-87543-5~~ |
| SUPERCEDED BY 1-103322-4 | | .125 | .318 | 1.300 | 13 | 1.384 | 28 | 1-87543-4 |
| | | .125 | .318 | 1.200 | 12 | 1.284 | 26 | 1-87543-3 |
| SUPERCEDED BY 1-103322-2 | | .125 | .318 | 1.100 | 11 | 1.184 | 24 | 1-87543-2 |
| 7 OBSOLETE | | .125 | .318 | 1.000 | 10 | 1.084 | 22 | ~~1-87543-1~~ |
| | | .125 | .318 | .900 | 9 | .984 | 20 | 1-87543-0 |
| SUPERCEDED BY 103322-9 | | .125 | .318 | .800 | 8 | .884 | 18 | 87543-9 |
| | | .125 | .318 | .700 | 7 | .784 | 16 | 87543-8 |
| | | .125 | .318 | .600 | 6 | .684 | 14 | 87543-7 |
| | | .125 | .318 | .500 | 5 | .584 | 12 | 87543-6 |
| | | .125 | .318 | .400 | 4 | .484 | 10 | 87543-5 |
| | | .125 | .318 | .300 | 3 | .384 | 8 | 87543-4 |
| 7 SUPERCEDED BY 5-87543-3 | | .125 | .318 | .200 | 2 | .284 | 6 | ~~87543-3~~ |
| SUPERCEDED BY 103322-2 | | .125 | .318 | .100 | 1 | .184 | 4 | 87543-2 |
| | 4 | .125 | .318 | – | – | .084 | 2 | 87543-1 |

THIS DRAWING IS A CONTROLLED DOCUMENT.

DIMENSIONS: INCHES

TOLERANCES UNLESS OTHERWISE SPECIFIED:
0 PLC ± –
1 PLC ± –
2 PLC ± –
3 PLC ± –
4 PLC ± –
ANGLES ± –

MATERIAL: HSG-GLASS FILLED NYLON COLOR: BLACK CONTACT-PHOS BRONZE

FINISH: SEE TABLE

DWN M.E.PASTEL 20 NOV 87
CHK T.C. CLARK 20 NOV 87
APVD T.C. CLARK 20 NOV 87

PRODUCT SPEC —
APPLICATION SPEC —
WEIGHT —

TE Connectivity

NAME: ASSEMBLY, MOD II, HEADER, DOUBLE ROW, .100X.100

SIZE A1 | CAGE CODE 00779 | DRAWING NO C-87543 | RESTRICTED TO —

CUSTOMER DRAWING | SCALE 4:1 | SHEET 1 OF 1 | REV H2