KYCON, Inc. 1810 Little Orchard Street, San Jose, CA 95125 (408)494-0330

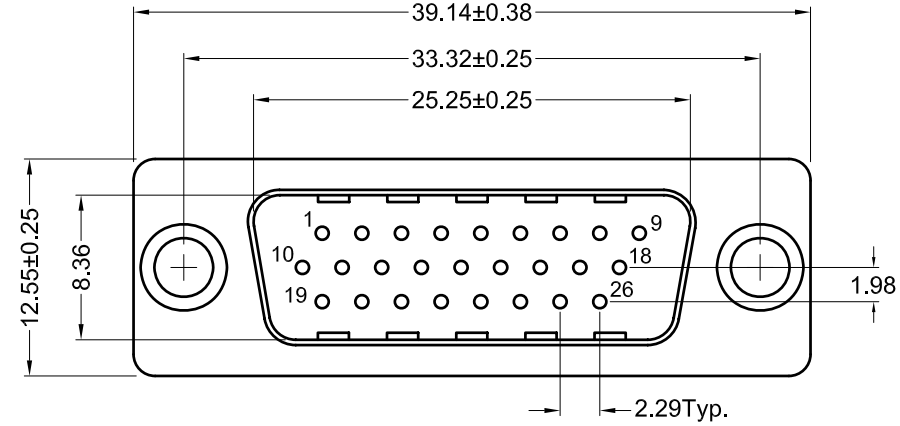

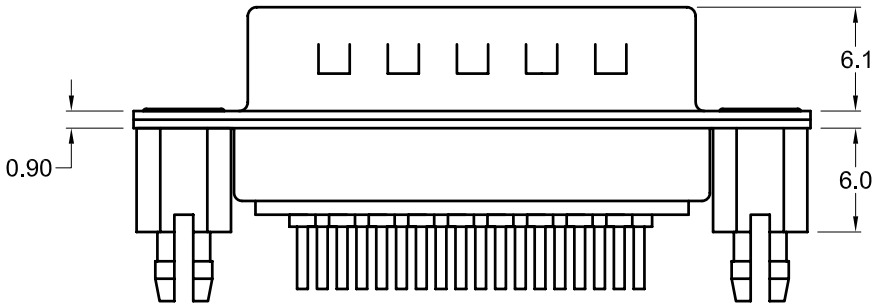

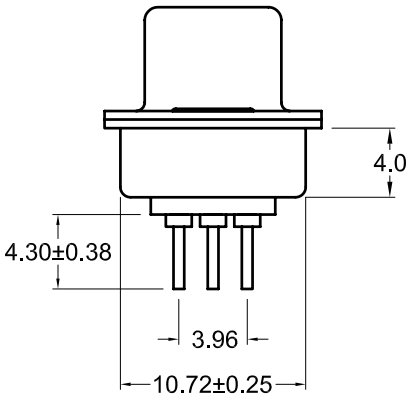

Boardlocks not shown in this view

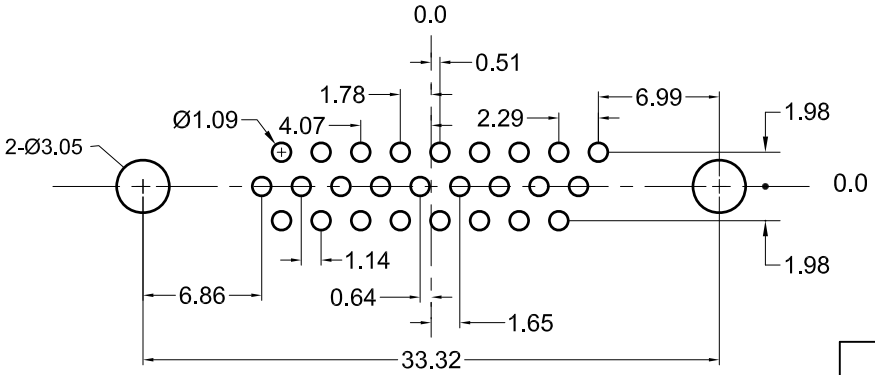

Recommended PCB Layout
(Top View)

Material And Finish

Shell: Steel Material, Tin Plated

Insert: PBT Thermoplastic,
Black Color, 30%
Glass Filled, UL 94V-0 Rated

Contact Material:
Plug- Brass

Contact Plating Options:
Standard Option:
Gold flash over Nickel on contacts, Tin over Nickel on soldertails

-15 Option:
15u" Gold over Nickel on contacts, Tin over Nickel on soldertails

-30 Option:
30u" Gold over Nickel on contacts, Tin over Nickel on soldertails

Electrical Specifications

Rated Current: 2A

Rated Voltage: 30V RMS

Insulation Resistance:
more than 1000 Megohm at 500v DC

Contact Resistance:
13 milliohm Max

Dielectric Withstanding Voltage:
1000V AC for 1 min

Operating Temperature
-55°C to +105°C

RoHS COMPLIANT
EU Directive 2002/95/EC

Ordering Information

Part Number	Contact Area Plating Finish
K86X-AD-26P-BR	Gold Flash (standard)
K86X-AD-26P-BR15	15u" Gold (15 option)
K86X-AD-26P-BR30	30u" Gold (30 option)

C US
LR78160

Tolerances
X.X ± 0.25
X.XX ± 0.15
Unless Stated Otherwise

REV.	DATE	DESCRIPTION	REV. BY	CHK. BY	DRAWN BY	DATE
A1	12/21/05	New Drawing	R. Aguirre	H. MA	R. Aguirre	12/21/05
A2	1/16/08	ECO# 07-052	WILL H.	H. MA		
					UNITS	
					mm	

K86X-AD-26P-BR

High Density, D-Sub, Vertical Mount,RoHS Compliant

26 pin plug, Formed Contacts, B/L

KYCON

Mouser Electronics

Authorized Distributor

Click to View Pricing, Inventory, Delivery & Lifecycle Information:

Kycon:
K86X-AD-26P-BR