THIS DRAWING IS UNPUBLISHED. RELEASED FOR PUBLICATION -,- .
© COPYRIGHT - By - ALL RIGHTS RESERVED.

LOC	DIST
AF	50

REVISIONS

P	LTR	DESCRIPTION	DATE	DWN	APVD
	D	REVISED PER ECR-13-001204	02JUL13	KH	PD

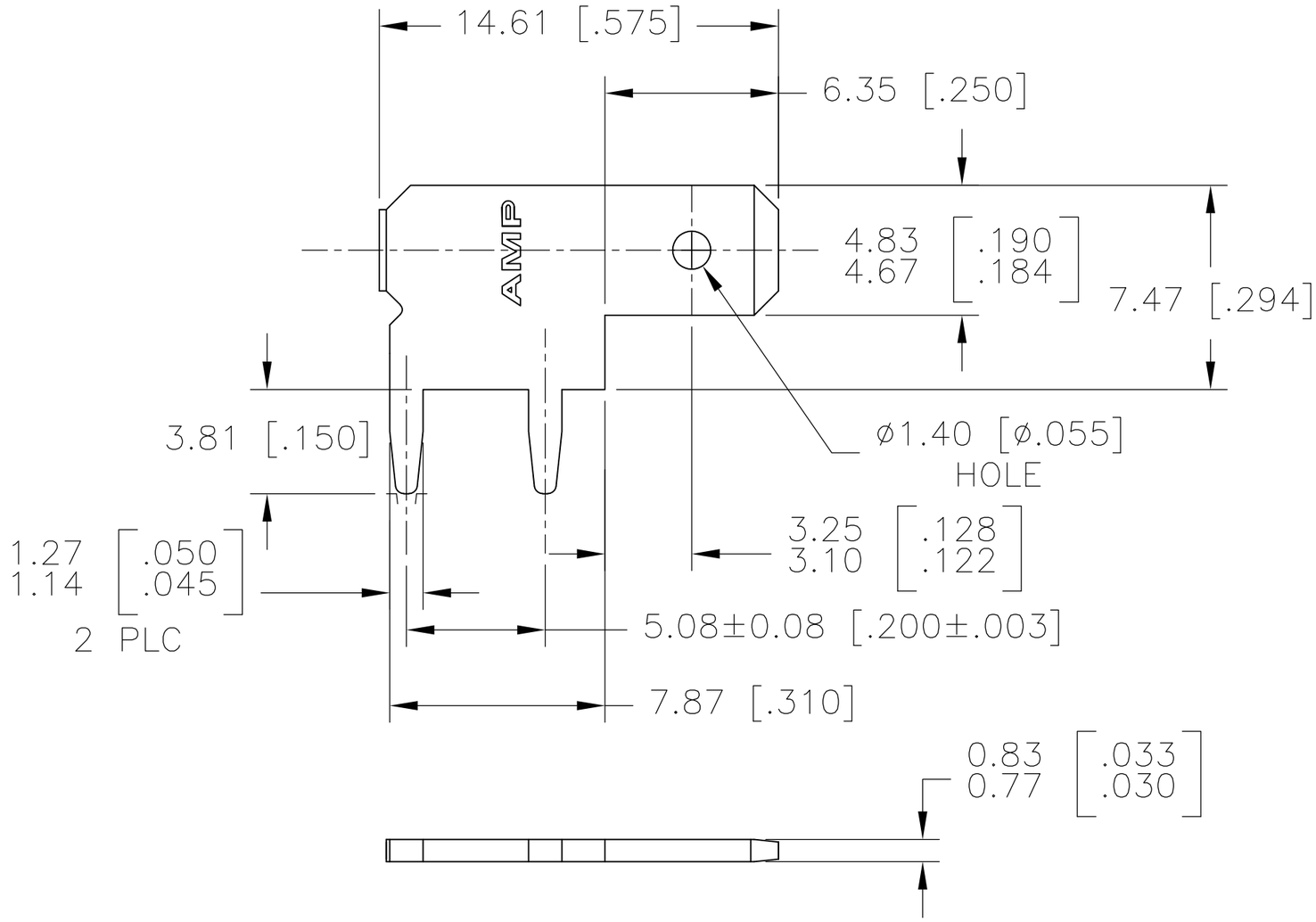

1 SUPPLIED IN LOOSE PIECE AFTER PLATING.

2 0.00381 [.000150] MIN TIN OVER 0.00127 [.000050] MIN NICKEL.

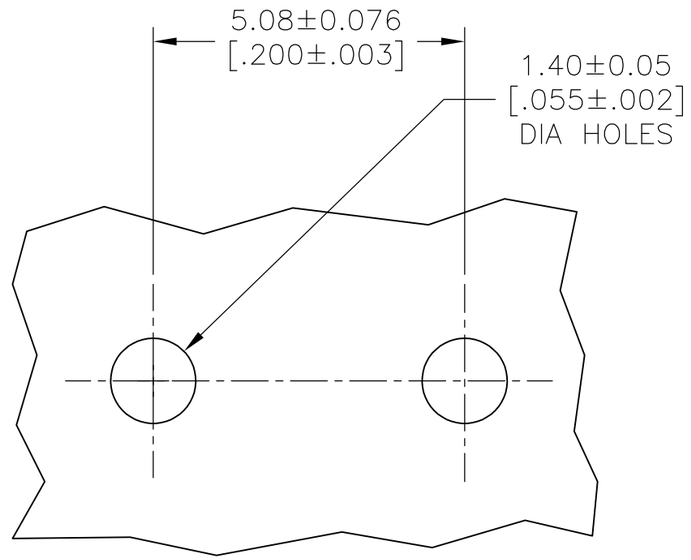

P.C.BOARD HOLES

1217756-1

PART NO.

THIS DRAWING IS A CONTROLLED DOCUMENT.

DIMENSIONS: mm [INCHES]

TOLERANCES UNLESS OTHERWISE SPECIFIED:

0 PLC	± -
1 PLC	± -
2 PLC	± 0.25 [.010]
3 PLC	± -
4 PLC	± -
ANGLES	± -

MATERIAL: BRASS

FINISH: 2

DWN	JR RUTH	13NOV01
CHK	N DEIBERT	13NOV01
APVD	N DEIBERT	13NOV01

PRODUCT SPEC: —

APPLICATION SPEC: 114-2115

WEIGHT: —

CUSTOMER DRAWING

TE Connectivity

NAME: TAB, FASTON, 4.75 [.187] SERIES

SIZE	CAGE CODE	DRAWING NO	RESTRICTED TO
A3	00779	C-1217756	—

SCALE	SHEET	REV
5:1	1 OF 1	D