MAX2164

ISDB-T 1-Segment Tuner

Tiny Mobile TV Tuner with Integrated LNA for Japanese Mobile TV Market

Status

All versions are No Longer Available.

Data Sheet

No Longer Available

Description

The MAX2164 is a low-IF tuner IC designed for use in 1-segment ISDB-T applications. The MAX2164 directly converts UHF band signals to a low-IF using a broadband I/Q downconverter. The operating frequency range covers the UHF band from 470MHz to 806MHz.

The MAX2164 includes a stand-alone LNA with 1.2dB (typical) noise figure, eliminating the need for an external LNA. The MAX2164 also includes RF variable-gain amplifiers, I and Q downconverting mixers, a baseband variable-gain amplifier, and a low-IF filter. The MAX2164 has monolithic VCOs, a complete frequency synthesizer, and an on-chip crystal oscillator with output buffer. The device operates with a crystal from 32MHz to 36MHz.

The MAX2164 features a 2-wire I²C-compatible serial control interface with multiple addresses for multituner applications. A low-power standby mode is available that shuts down the signal path leaving the control interface, crystal oscillator, and buffer circuits active. An external pin can shut down the entire device.

The MAX2164 is specified for operation in the extended -40°C to +85°C temperature range and is available in a 2.06mm x 2.49mm x 0.35mm, 5 x 6 bump, lead-free WLP package.

Key Features

- 470MHz to 806MHz Frequency Range
- 1.2dB NF Integrated Wideband LNA
- -100dBm to 0dBm High Dynamic Range
- Integrated VCO and Frequency Synthesizer
- -93dBc/Hz at 10kHz Low LO Phase Noise
- Integrated Low-IF Filters
- Greater Than 40dB Image Rejection
- Single +2.65V to +3.3V Supply
- 77mW (typ) Low Power
- 2-Wire I²C Serial-Control Interface
- Low-Power Shutdown and Standby Modes

Applications/Uses

- Cellular Phones Mobile TV
- Game Consoles
- Home Audio
- Personal Digital Assistants (PDAs)
- Portable TV, Audio, or GPS Devices

Diagram

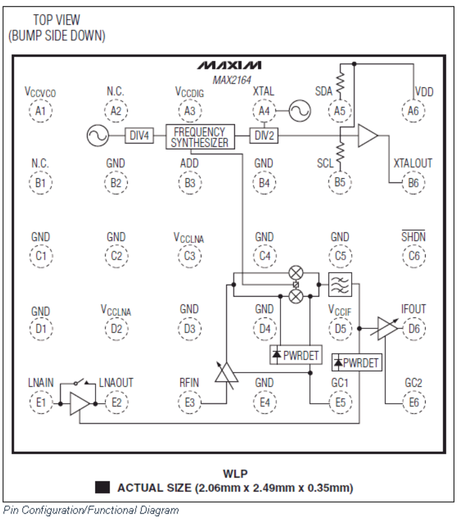

Pin Configuration/Functional Diagram

Technical Documents

Product Guide 5158 Wireless

Product Guides

Wireless (PDF)

Reliability Reports

Request Reliability Report for: MAX2164 Go

Software/Models

none

Ordering Information

Filters: Part Number: Package: Any Temperature: Any Tape and Reel Sample Go

Part Number	Free Sample	Buy	Status	Package: TYPE PINS FOOTPRINT DRAWING CODE/VAR *	Temp	RoHS/Lead-Free? Materials Analysis
MAX2164E/D+		N/A	No Longer Available	BARE D; Land Pattern: Not Available		See data sheet
MAX2164E/D+T		N/A	No Longer Available	BARE D; Land Pattern: Not Available		See data sheet
MAX2164EVKIT+		N/A	No Longer Available	KIT; Land Pattern: Not Available		See data sheet

Notes:
1. Other options and links for purchasing parts are listed at: http://www.maxim-ic.com/sales.
2. Didn't Find What You Need? Ask our applications engineers. Expert assistance in finding parts, usually within one business day.
3. Part number suffixes: T or T&R = tape and reel; + = RoHS/lead-free; # = RoHS/lead-exempt; -D = drypack; -U/+U on DS parts = cut tape. More: See Full Data Sheet or Maxim Product Naming Conventions.
4. * Some packages have variations, listed on the drawing. "PkgCode/Variation" tells which variation the product uses. Note that "+", "#", "-" in the part number suffix describes RoHS status. Package drawings may show a different suffix character.

Similar Products by Function

MAX2163	ISDB-T 1-Segment Tuner
MAX2160, MAX2160EBG	ISDB-T Single-Segment Low-IF Tuners
MAX2161, MAX2161S, MAX2162, ...	ISDB-T 1- and 3-Segment Low-IF Tuners

Similar Products by Application

Broadcast TV and Radio > Mobile TV

Your Comments

Login or register to post a comment.

Didn't Find What You Need?

Next Day Product Selection Assistance from Applications Engineers
Parametric Search
Applications Help

Information Index

Overview
Description
Key Features
Applications/Uses
Key Specifications
Diagram
Notes and Comments

Technical Documents
Data Sheet
Technical Documents
Evaluation Kits
Reliability Reports
Software/Models

Ordering Info
Price and Availability
Samples
Buy Online
Package Information
Lead-Free Information

Related Products
Similar Products by Function
Similar Products by Application
Evaluation Kits
Products with Similar Part Numbers
Products Used With This

Document Ref.: 19-4743 Rev 1; 2009-12-01
This page last modified: 2009-12-01