THIS DRAWING IS UNPUBLISHED. RELEASED FOR PUBLICATION -,- .
© COPYRIGHT - BY TYCO ELECTRONICS CORPORATION. ALL RIGHTS RESERVED.

LOC	DIST
G	14

REVISIONS

P	LTR	DESCRIPTION	DATE	DWN	APVD
	B	REV PER ECR 08-028314	19NOV08	JR	TM

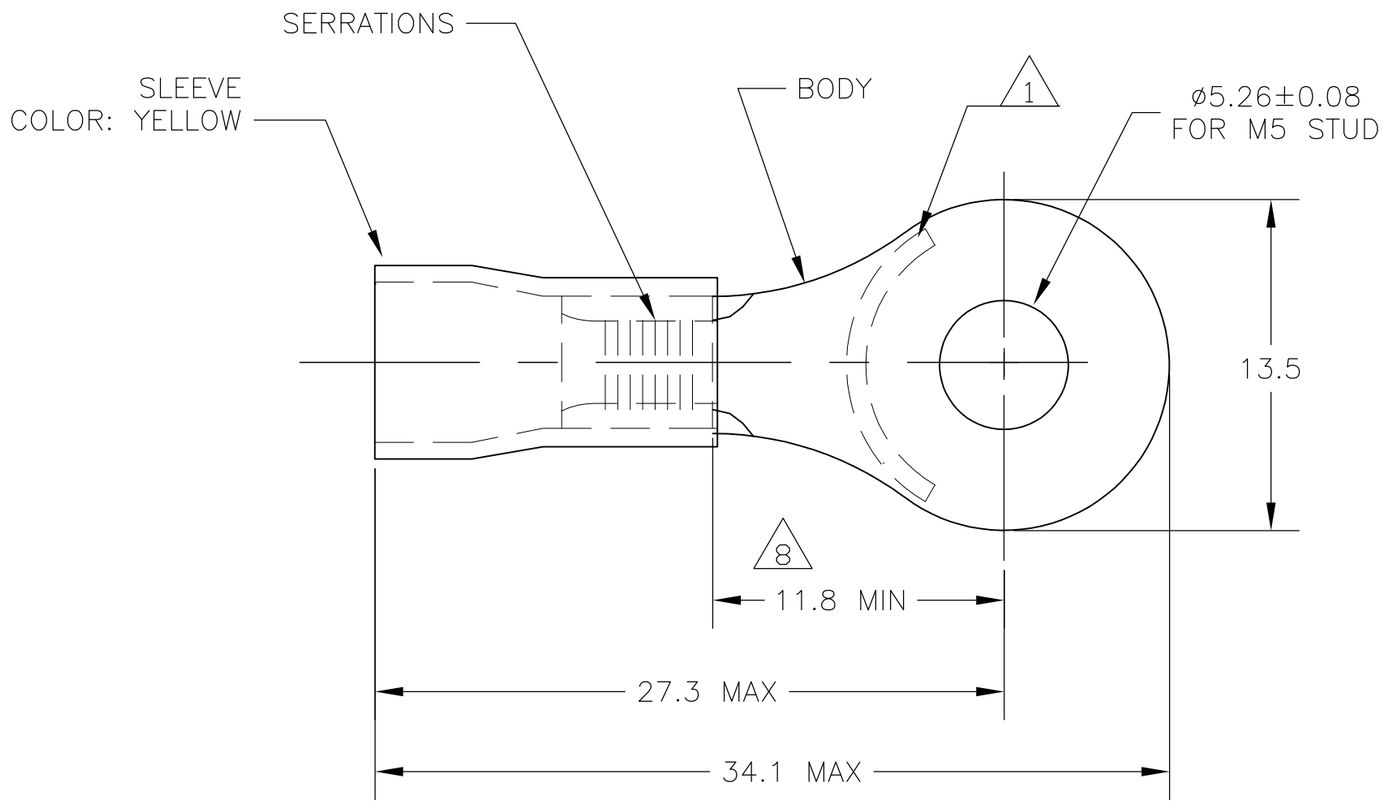

1. STAMP "AMP 12-10*", LOCATION APPROX AS SHOWN.
2. WIRE INSULATION DIA 3.8-6.4
3. OPERATING TEMPERATURE 90°C MAX
4. VOLTAGE RATING 600V MAX
5. CMA 2.62-6.64mm2 [5,180-13,100]
6. MATERIAL:
   BODY - COPPER PER ASTM B-152
   INSULATION - PVC
7. FINISH:
   BODY - TIN PL PER ASTM B-545
   INSULATION - COLOR-YELLOW
8. APPLIES FROM EDGE OF METAL WIRE BARREL TO CENTER OF STUD HOLE.
9. MATERIAL THICKNESS IS 1.00±0.05

LOOSE PIECE	160293
PACKAGE TYPE	PART NO

THIS DRAWING IS A CONTROLLED DOCUMENT.

DIMENSIONS: MM ~~INCHES~~

TOLERANCES UNLESS OTHERWISE SPECIFIED:

0 PLC	± -
1 PLC	± -
2 PLC	± 0.20
3 PLC	± -
4 PLC	± -
ANGLES	± 5°

MATERIAL: -

FINISH: -

DWN	jr ruth	19NOV08
CHK	T MICHIELUTTI	19NOV08
APVD	T MICHIELUTTI	19NOV08
PRODUCT SPEC	—	
APPLICATION SPEC	—	
WEIGHT	—	

CUSTOMER DRAWING

Tyco Electronics

Tyco Electronics Corporation
Harrisburg, PA 17105-3608

NAME: TERMINAL RING TONGUE, PLASTI-GRIP, WIRE SIZE 12:10 —

SIZE	CAGE CODE	DRAWING NO	RESTRICTED TO
A3	00779	C-160293	—

SCALE	SHEET	REV
4:1	1 OF 1	B