THIS DRAWING IS UNPUBLISHED. RELEASED FOR PUBLICATION 20
© COPYRIGHT 20 TE CONNECTIVITY ALL RIGHTS RESERVED.

LOC	DIST
AP	-

REVISIONS

P	LTR	DESCRIPTION	DATE	DWN	APVD
	A	RELEASED	14JUN2011	HC	WLS
	B	REV. BY ECO-12-014195	03AUG2012	HC	WLS
	B1	REV. BY ECO-15-007760	22MAI2015	HC	WLS
	B2	REVISED BY ECO 16-014328	03OCT2016	HC	WLS

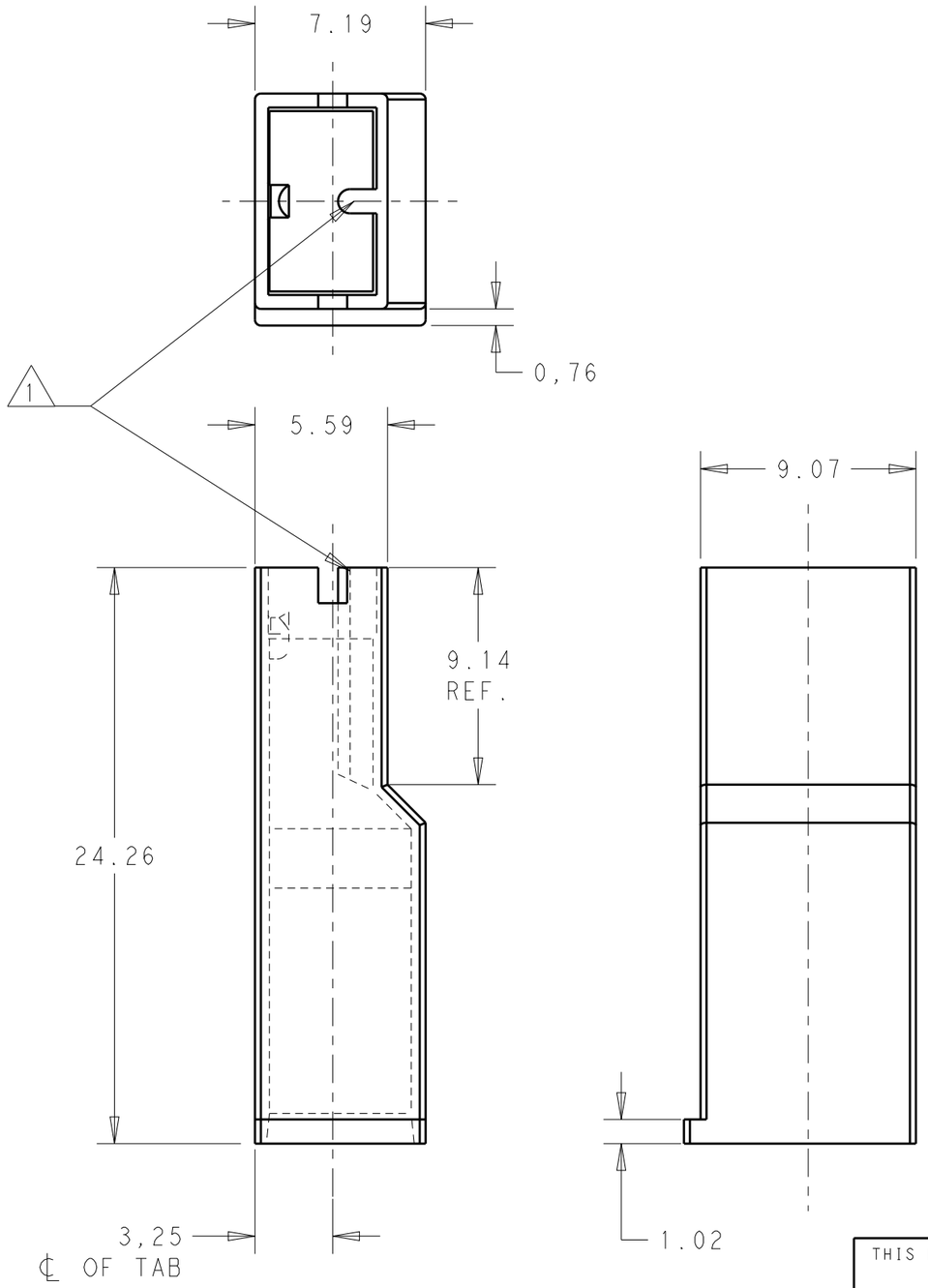

1. -RIB MAY EXTEND TO FRONT OF HOUSING.
2. -MATERIAL: PA 6.6 ACC. TO SPEC. IEC 60335 GWT 850°C - WITHOUT FLAME.
3. - HEAT STABILIZED

COLOR	MATERIAL	PART NUMBER
BLACK	PA 6.6 - HB (3)	1-2133341-3
NATURAL	PA 6.6 - UL94 - V0 - GWT (2)	1-2133341-2
NATURAL	PA 6.6 - UL94 - V0	1-2133341-1
BLUE	PA 6.6 - UL94 - V2	2133341-6
GREEN		2133341-5
YELLOW		2133341-4
RED		2133341-3
NATURAL		2133341-2
BLACK		2133341-1

THIS DRAWING IS A CONTROLLED DOCUMENT.

DIMENSIONS: mm

TOLERANCES UNLESS OTHERWISE SPECIFIED:

0 PLC	±-
1 PLC	±0,5
2 PLC	±0,5
3 PLC	±-
4 PLC	±-
ANGLES	±-

MATERIAL SEE TABLE

FINISH -

DWN H.C.CANTERI 25MAY2011
CHK W.L.STEFANI 25MAY2011
APVD - -
PRODUCT SPEC 108-3252
APPLICATION SPEC 114-2153
WEIGHT -

TE Connectivity

NAME MKI .250 POSITIVE LOCK RECEPTACLE INSULATOR MKI .250 POSITIVE LOCK

SIZE	CAGE CODE	DRAWING NO	RESTRICTED TO
A3	00779	C-2133341	-

CUSTOMER DRAWING

SCALE 4/1 SHEET 1 OF 1 REV B2