THIS DRAWING IS UNPUBLISHED. RELEASED FOR PUBLICATION -,- .
© COPYRIGHT - BY TYCO ELECTRONICS CORPORATION. ALL INTERNATIONAL RIGHTS RESERVED.

PART NUMBER	REV	FIRST USED
1385782-1	B	122500-1
1385782-2	B	565435-5
1385782-3	B	354500-1

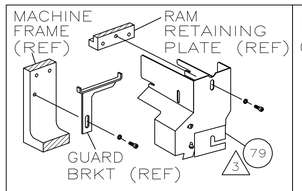

AMP-O-LECTRIC TM TERM GUARD

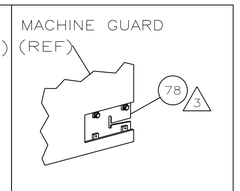

G TERMINATOR GUARD

TERMINAL NAME: BLANKET PIN

60115

AMP TERMINAL	AMP CRIMP SPECS	
PAD LTR	CRIMP HEIGHT	WIRE SIZE
A	.043 ±.002 [1.09 ±0.05mm]	20
B	.041 ±.002 [1.04 ±0.05mm]	22
C	NOT	USED
D	NOT	USED

CRIMP	SIZE	TYPE	RANGE
WIRE	.080 [2.03mm]	0	20-22
INSUL	.120 [3.05mm]	0	.080 MAX

WIRE STRIP LENGTH	TERM APPL SPEC	FEED	APPL INSTRUCTION	SET UP GAGE	LAYOUT
.186-.216	114-2083	.460	408-8040	458637-1	L1385782

LOC	DIST
A	66

REVISIONS

P	LTR	DESCRIPTION	DATE	DWN	APVD
	B	ECR-09-009983	5-2009	MY	TE

-1	LEADMAKER	MECH POST FEED
-2	BENCH MODEL K	MECH PRE FEED
-3	BENCH MODEL G	MECH PRE FEED

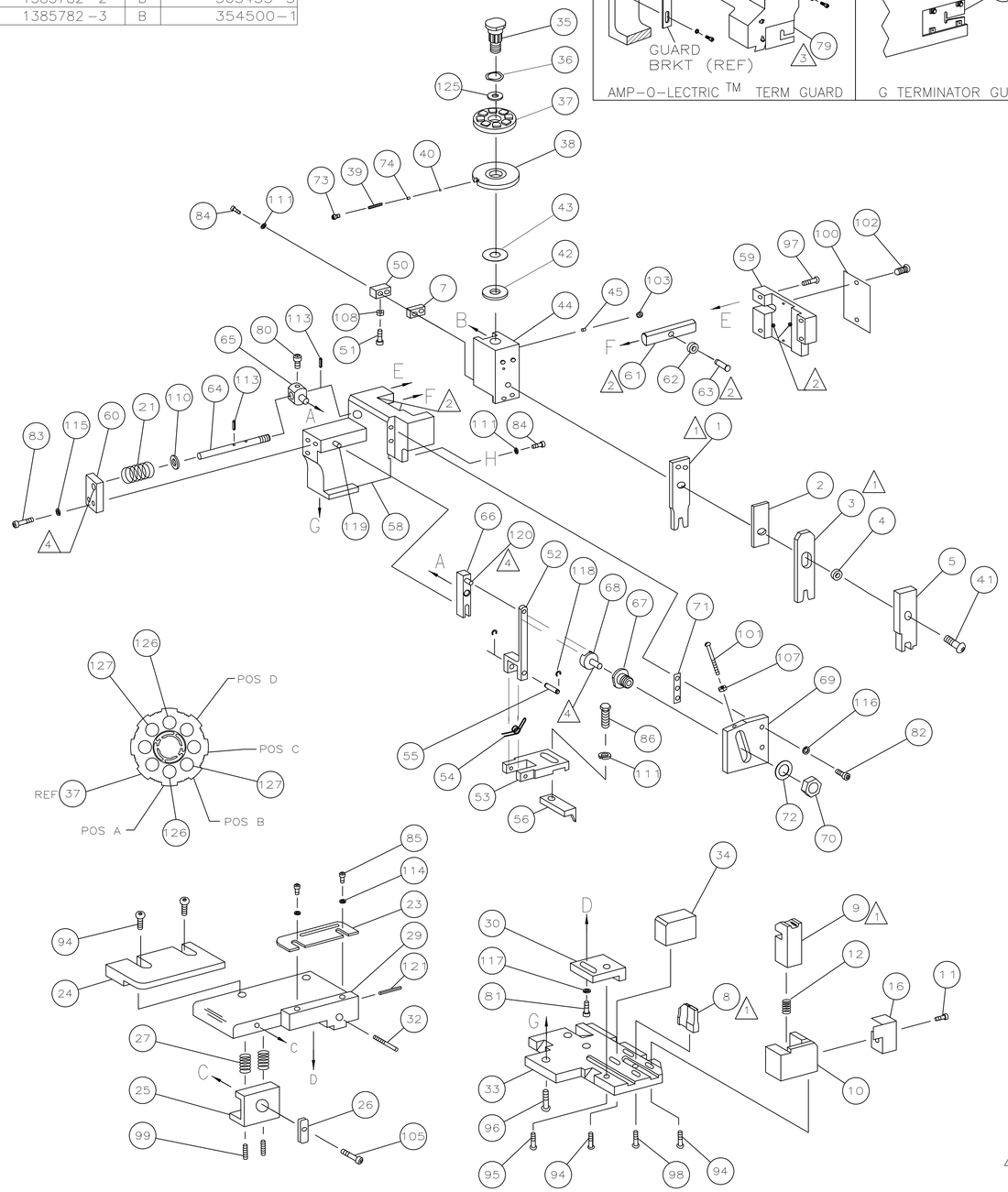

-3	-2	-1	U/M	PART NO	DESCRIPTION	ITEM NO
						129
						128
2	2	2	–	4-354779-0	PIN, WIRE DISC (.3190)B	127
2	2	2	–	3-354779-6	PIN, WIRE DISC (.3170)A	126
1	1	1	–	986950-1	WASHER, FLAT PRECISION	125
1	1	1	–	217238-1	GENERAL INSTRUCTION PACKAGE	124
1	1	1	–	4088040	SF APPL INST 408-8040	123
						122
1	1	1	–	4-21028-0	PIN,SLT SPR(Ø.093x.75)ST GDE PL	121
REF	REF	REF	–	1-21030-1	PIN,DOWEL(Ø.187x.50)LEVER	120
REF	REF	REF	–	1-21030-6	PIN,DOWEL(Ø.187x1.25)HOUSING	119
REF	REF	REF	–	21045-3	RING,RET "C"(Ø.187)FD FING PIN	118
1	1	1	–	21024-5	WASHER, LOCK(#10)ADJ BLOCK	117
REF	REF	REF	–	21024-5	WASHER,LOCK(#10)ADJ PLATE	116
REF	REF	REF	–	21024-5	WASHER,LOCK(#10)FEED GDE ROD	115
2	2	2	–	21024-2	WASHER,LOCK(#4)FRONT STP GUIDE	114
REF	REF	REF	–	5-21028-1	PIN,SLT SPR(Ø.125x.50)ADJ ROD	113
						112
4	4	4	–	21024-4	WASHER,LOCK(#8)STRIPPER	111
REF	REF	REF	–	21899-4	WASHER,FLAT(Ø5/16)SCREW ADJ	110
						109
1	1	1	–	21018-5	NUT,HEX(NO.6)HOLDDOWN	108
REF	REF	REF	–	21068-5	NUT,HEX(6-32)FEED ADJ	107
						106
1	1	1	–	22353-8	SCR,SHLD(Ø.187x.25)DRAG LEVER	105
						104
1	1	1	–	21009-2	SCR,SKT SET(1/4-20x.25 LW)RAM	103
2	2	2	–	21017-2	SCR,DRIVE(#2x.19)ID PLATE	102
REF	REF	REF	–	6-23715-5	SCR,PAN HD(6-32x1.50)FEED ADJ	101
1	1	1	–	461264-1	PLATE, IDENTIFICATION	100
2	2	2	–	5-21006-6	SCR,SET(10-32x.75)DRAG	99
1	1	1	–	22733-8	SCR,BHC(8-32x.38 LW)ANVIL	98
REF	REF	REF	–	2-21002-9	SCR,BHC(10-32x.75)CAP	97
REF	REF	REF	–	2-22733-8	SCR,BHC(1/4-20x.62)HOUSING	96
REF	REF	REF	–	2-21002-7	SCR,BHC(10-32x.50)SG ADJ BLOCK	95
6	6	6	–	2-21002-2	SCR,BHC(8-32x.50)TERM H DWN	94
						93
						92
1	1	1	–	1-21002-7	SCR,BHC(6-32x.38)CAM	91
						90
						89
						88
						87
1	1	1	–	2-22603-0	SCR,HEX HD(8-32x.31)FEED FINGER	86
2	2	2	–	1-21000-3	SCR,SHC(4-40x.25)FR ST GUIDE	85
3	3	3	–	2-21000-8	SCR,SHC(8-32x.62)STRIPPER	84
REF	REF	REF	–	3-21000-7	SCR,SHC(10-32x.75)FEED ROD GD	83
REF	REF	REF	–	3-21000-6	SCR,SHC(10-32x.62)FD ADJ BLK	82
1	1	1	–	3-21000-4	SCR,SHC(10-32x.38)SG ADJ BL	81
REF	REF	REF	–	3-21000-4	SCR,SHC(10-32x.38)PIVOT BLK	80
–	REF	–	–	455749-1	GUARD, WINDOW	79
REF	–	–	–	679532-1	INSERT, GUARD	78
						77
						76
						75
1	1	1	–	690603-1	SPRING, ASSIST	74
1	1	1	–	23030-1	SCR,SHC(6-32x.25 SL)INS DISC	73
REF	REF	REF	–	458109-1	WASHER, SPECIAL	72
REF	REF	REF	–	690517-1	SPACER	71

QTY REQD PER ASSY — PARTS LIST

	-3	-2	-1	U/M	PART NO	DESCRIPTION	ITEM NO
	REF	REF	REF	–	22594-8	NUT,HEX(1/2-20)	70
	REF	REF	REF	–	240628-1	PLATE, ADJUSTMENT	69
	REF	REF	REF	–	240626-1	SHAFT, PIVOT	68
	REF	REF	REF	–	240633-1	BUSHING	67
	REF	REF	REF	–	455680-1	LEVER, INTERMEDIATE	66
	REF	REF	REF	–	240629-1	BLOCK, PIVOT	65
	REF	REF	REF	–	240632-2	SCREW, ADJ FEED ROD	64
	REF	REF	REF	–	240659-3	PIN, CAM ROLLER	63
	REF	REF	REF	–	240658-1	ROLLER, CAM	62
	REF	REF	REF	–	454398-2	ROD, FEED	61
	REF	REF	REF	–	454178-1	GUIDE, FEED ROD	60
	REF	REF	REF	–	454220-1	CAP, RAM	59
	REF	REF	REF	–	454485-1	HOUSING	58
							57
	1	1	1	–	458537-2	PAWL, FEED	56
	REF	REF	REF	–	240624-1	PIN, FEED FINGER	55
	REF	REF	REF	–	691499-1	SPRING, FEED FINGER	54
	REF	REF	REF	–	690541-1	HOLDER, FEED FINGER	53
	REF	REF	REF	–	455679-1	LEVER, TERMINAL FEED ARM	52
	1	1	1	–	811242-2	BUMPER, HOLDDOWN	51
	1	1	1	–	690753-1	SPACER, TONKER	50
	1	–	–	–	690602-6	CAM, PRE-FEED 1 5/8 ST	49
	–	1	–	–	690602-5	CAM, PRE-FEED 1 1/8 ST	48
	–	–	1	–	690501-4	CAM, POST-FEED 1 5/8 ST	47
	1	1	1	–	459456-1	APPLICATOR, BASIC (SUBASSY)	46
	1	1	1	–	690191-1	PLUG, NYLON	45
	1	1	1	–	455673-1	RAM	44
	1	1	1	–	690125-1	WASHER, LAMINATED	43
	1	1	1	–	690124-1	WASHER, RAM	42
	1	1	1	–	7-21002-9	BOLT, CRIMPER(5/16x1.00)	41
	1	1	1	–	23241-6	BALL, STEEL	40
	1	1	1	–	690170-1	SPRING, COMPRESSION	39
	1	1	1	–	690142-1	DISC, INSULATION	38
	1	1	1	–	354777-1	DISC, WIRE	37
	1	1	1	–	22480-5	WASHER, SPRING	36
	1	1	1	–	690212-1	POST, RAM	35
	1	1	1	–	692776-2	SUPPORT, TERMINAL	34
	REF	REF	REF	–	455675-1	PLATE, BASE	33
	1	1	1	–	690432-3	SCREW, ADJUSTMENT	32
							31
	REF	REF	REF	–	455689-1	BLOCK, STRIP GUIDE ADJ	30
	1	1	1	–	458144-6	PLATE, STRIP GUIDE	29
							28
	2	2	2	–	1-22284-0	SPRING, DRAG	27
	1	1	1	–	240793-1	LEVER, DRAG RELEASE	26
	1	1	1	–	240792-1	DRAG, TERMINAL	25
	1	1	1	–	4-690440-8	GUIDE, STRIP (REAR)	24
	1	1	1	–	690438-1	GUIDE, STRIP (FRONT)	23
	–	–	1	–	690472-2	STRIPPER	22
	REF	REF	REF	–	4-22284-9	SPRING, FEED RETURN	21
							20
	1	1	–	–	691353-1	STRIPPER	19
							18
							17
	1	1	1	–	318563-1	GUARD, CHIP, FRONT	16
							15
							14
							13
	1	1	1	–	6-22279-3	SPRING, SHEAR	12
	1	1	1	–	690461-1	STOP, SHEAR	11
	1	1	1	–	468798-1	HOLDER, SHEAR (FRONT)	10
	1	1	1	–	462006-3	SHEAR, FLOAT (FRONT)	9
1	1	1	1	–	1633109-1	ANVIL	8
	1	1	1	–	1-240641-0	SPACER, DEPRESSOR (REAR)	7
							6
	1	1	1	–	1-455889-4	DEPRESSOR, SHEAR (FRONT)	5
	1	1	1	–	1-238011-9	SPACER, BLOCK CRIMPER	4
1	1	1	1	–	1-683454-6	CRIMPER, INSULATION	3
	1	1	1	–	455888-6	SPACER, CRIMPER	2
1	1	1	1	–	5-459492-1	CRIMPER, WIRE	1

QTY REQD PER ASSY — PARTS LIST

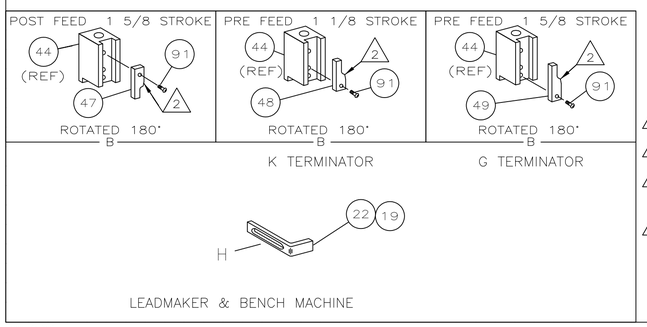

LEADMAKER & BENCH MACHINE

1. RECOMMENDED SPARE PARTS.
2. GREASE LIGHTLY.
3. GUARD MUST BE IN PLACE WHEN OPERATING APPLICATOR IN A BENCH MACHINE.
4. LUBRICATE DAILY USING NO. 20 MACHINE OIL.
5. ITEMS WITH QTY OF REF SPECIFIED (EXCEPT ITEMS 78 AND 79) ARE USED ON ITEM 46.

THIS DRAWING IS A CONTROLLED DOCUMENT.

DIMENSIONS: INCHES

TOLERANCES UNLESS OTHERWISE SPECIFIED: 0 PLC ± – ; 1 PLC ± – ; 2 PLC ± – ; 3 PLC ± – ; 4 PLC ± – ; ANGLES ± –

MATERIAL –

FINISH –

DWN 17JUN04 C.REICHELDERFER
CHK –
APVD 17JUN04 T.ELBIN
PRODUCT SPEC –
APPLICATION SPEC –
WEIGHT –

Tyco Electronics — Tyco Electronics Corporation, Harrisburg, PA 17105-3608

NAME: SIDE FEED HDM APPLICATOR – –

SIZE	CAGE CODE	DRAWING NO	RESTRICTED TO
A1	00779	C-1385782	–

CUSTOMER DRAWING — SCALE – — SHEET 1 OF 1 — REV B

4805 (1/08)

01MAY2009 12:31pm

Mouser Electronics

Authorized Distributor

Click to View Pricing, Inventory, Delivery & Lifecycle Information:

TE Connectivity:
1385782-3