THIS DRAWING IS UNPUBLISHED. RELEASED FOR PUBLICATION -,- .
© COPYRIGHT - By - ALL RIGHTS RESERVED.

| LOC | DIST |
|---|---|
| CM | 00 |

REVISIONS

| P | LTR | DESCRIPTION | DATE | DWN | APVD |
|---|---|---|---|---|---|
| | N3 | REVISED PER ECR-15-006702 | 29JUL2015 | NK | PQ |

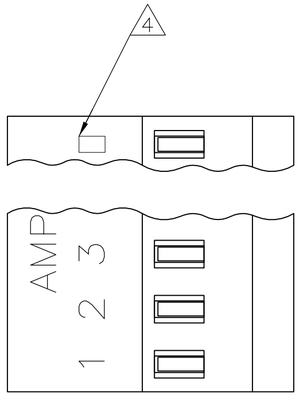


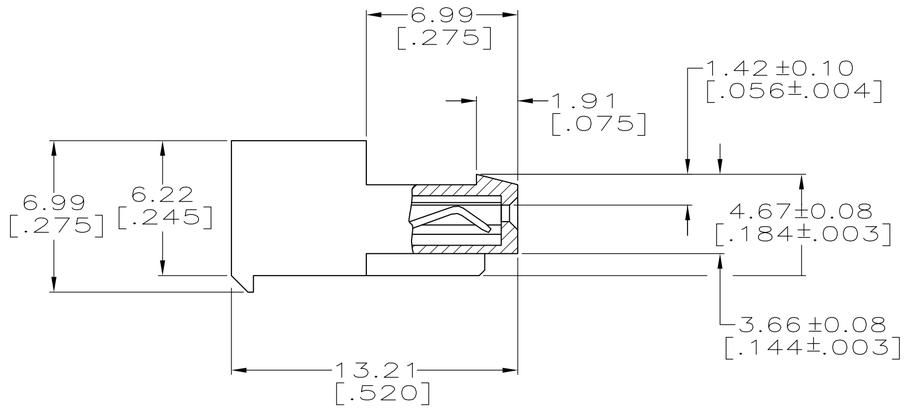


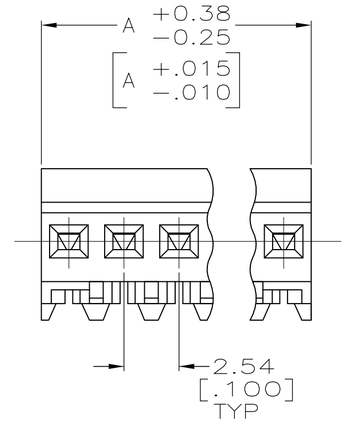


| | | | | |
|---|---|---|---|---|
| YES | 71.12[2.800] | 28 | 5-640441-8 | |
| YES | 68.58[2.700] | 27 | 5-640441-7 | |
| YES | 66.04[2.600] | 26 | 5-640441-6 | |
| YES | 63.50[2.500] | 25 | 5-640441-5 | |
| YES | 60.96[2.400] | 24 | 5-640441-4 | |
| YES | 58.42[2.300] | 23 | 5-640441-3 | |
| YES | 55.88[2.200] | 22 | 5-640441-2 | |
| YES | 53.34[2.100] | 21 | 5-640441-1 | |
| YES | 50.80[2.000] | 20 | 5-640441-0 | |
| YES | 48.26[1.900] | 19 | 4-640441-9 | |
| YES | 45.72[1.800] | 18 | 4-640441-8 | |
| YES | 43.18[1.700] | 17 | 4-640441-7 | |
| YES | 40.64[1.600] | 16 | 4-640441-6 | |
| YES | 38.10[1.500] | 15 | 4-640441-5 | |
| YES | 35.56[1.400] | 14 | 4-640441-4 | |
| YES | 33.02[1.300] | 13 | 4-640441-3 | |
| YES | 30.48[1.200] | 12 | 4-640441-2 | |
| YES | 27.94[1.100] | 11 | 4-640441-1 | |
| YES | 25.40[1.000] | 10 | 4-640441-0 | |
| YES | 22.86[.900] | 9 | 3-640441-9 | |
| YES | 20.32[.800] | 8 | 3-640441-8 | |
| YES | 17.78[.700] | 7 | 3-640441-7 | |
| YES | 15.24[.600] | 6 | 3-640441-6 | |
| YES | 12.70[.500] | 5 | 3-640441-5 | |
| YES | 10.16[.400] | 4 | 3-640441-4 | |
| YES | 7.62[.300] | 3 | 3-640441-3 | |
| YES | 5.08[.200] | 2 | 3-640441-2 | |
| ~~NO~~ | ~~71.12[2.800]~~ | ~~28~~ | ~~2-640441-8~~ | SUPERCEDED BY 5-640441-8 7 |
| ~~NO~~ | ~~68.58[2.700]~~ | ~~27~~ | ~~2-640441-7~~ | SUPERCEDED BY 5-640441-7 7 |
| ~~NO~~ | ~~66.04[2.600]~~ | ~~26~~ | ~~2-640441-6~~ | SUPERCEDED BY 5-640441-6 7 |
| ~~NO~~ | ~~63.50[2.500]~~ | ~~25~~ | ~~2-640441-5~~ | SUPERCEDED BY 5-640441-5 7 |
| NO | 60.96[2.400] | 24 | 2-640441-4 | |
| ~~NO~~ | ~~58.42[2.300]~~ | ~~23~~ | ~~2-640441-3~~ | SUPERCEDED BY 5-640441-3 7 |
| NO | 55.88[2.200] | 22 | 2-640441-2 | |
| ~~NO~~ | ~~53.34[2.100]~~ | ~~21~~ | ~~2-640441-1~~ | SUPERCEDED BY 5-640441-1 7 |
| NO | 50.80[2.000] | 20 | 2-640441-0 | |
| NO | 48.26[1.900] | 19 | 1-640441-9 | |
| NO | 45.72[1.800] | 18 | 1-640441-8 | |
| NO | 43.18[1.700] | 17 | 1-640441-7 | |
| NO | 40.64[1.600] | 16 | 1-640441-6 | |
| NO | 38.10[1.500] | 15 | 1-640441-5 | |
| NO | 35.56[1.400] | 14 | 1-640441-4 | |
| NO | 33.02[1.300] | 13 | 1-640441-3 | |
| NO | 30.48[1.200] | 12 | 1-640441-2 | |
| NO | 27.94[1.100] | 11 | 1-640441-1 | |
| NO | 25.40[1.000] | 10 | ~~1-640441-0~~ | OBSOLETE |
| NO | 22.86[.900] | 9 | 640441-9 | |
| NO | 20.32[.800] | 8 | 640441-8 | |
| NO | 17.78[.700] | 7 | 640441-7 | |
| NO | 15.24[.600] | 6 | 640441-6 | |
| NO | 12.70[.500] | 5 | 640441-5 | |
| NO | 10.16[.400] | 4 | 640441-4 | |
| NO | 7.62[.300] | 3 | 640441-3 | |
| NO | 5.08[.200] | 2 | 640441-2 | |
| LEADFREE | DIM A | NO. OF CIRCUITS | PART NO. | |

1. MATERIAL: CONNECTOR - NYLON UL94V-2 (WHITE).
   CONTACTS - 0.30[.012] THICK COPPER ALLOY
   BRIGHT TIN-LEAD .00203[.000080] MIN THICKNESS
   FOR 640441-2 THRU 2-640441-8.
   MATTE WHISKER MITIGATED TIN .00203[.000080] MIN THICKNESS
   OVER NICKEL UNDERPLATE FOR 3-640441-2 THRU 5-640441-8.
2. CONTACTS ACCEPT 24 AWG WIRE WITH 1.52[.060] MAX INSULATION DIAMETER.
3. CONTACTS MUST ACCEPT 0.64±0.03[.025 POST AND REMAIN LOCKED IN POSITION.
4. IDENTIFICATION NUMBER FOR LAST CIRCUIT MAY NOT APPEAR ON ALL ASSEMBLIES.
5. DIMENSIONS IN BRACKETS ARE IN INCHES.
6. HOUSING FEATURES ARE: CLOSED END WITH LOCKING RAMP.
7. OBSOLETE PARTS: OBSOLETE CIS STREAMLINING PER D.RENAUD/D.SINISI

640441

THIS DRAWING IS A CONTROLLED DOCUMENT.

DIMENSIONS: mm [INCHES]

TOLERANCES UNLESS OTHERWISE SPECIFIED:
0 PLC ±
1 PLC ±
2 PLC ±
3 PLC ± 0.13 [.005]
4 PLC ±
ANGLES ±

MATERIAL 1
FINISH 1

DWN S. CARPENTER 09JUN2003
CHK D. BOSSI 09JUN2003
APVD D. BOSSI 09JUN2003
PRODUCT SPEC 108-1050
APPLICATION SPEC 114-1019
WEIGHT

TE Connectivity

NAME MTA-100 CONNECTOR ASSEMBLY, 24 AWG, STANDARD

| SIZE | CAGE CODE | DRAWING NO | RESTRICTED TO |
|---|---|---|---|
| A2 | 00779 | C-640441 | — |

CUSTOMER DRAWING | SCALE 5:1 | SHEET 1 OF 1 | REV N3