THIS DRAWING IS UNPUBLISHED.
VERTRAULICHE UNVEROEFFENTLICHTE ZEICHNUNG
© COPYRIGHT 2014 Tyco Electronics AMP GmbH
RELEASED FOR PUBLICATION 2014
FREI FUER VEROEFFENTLICHUNG
ALL RIGHTS RESERVED.
ALLE RECHTE VORBEHALTEN.

MATED WITH:
PASSEND ZU:

PROJEKT NR.: PRJ-14-000000805

REVISIONS
AENDERUNGEN

P	LTR	DESCRIPTION BESCHREIBUNG	DATE	DWN	APVD
	A2	ADDED PCB LAYOUT IN DRAWING	23FEB2015	KR	MB

1 MATERIAL: ITEM NO. 1: HOUSING - BRASS NICKEL PLATED
ITEM NO. 2: CONTACT BODY - PA
ITEM NO. 3: CONTACT - CuSn
CONTACT FINISH - Au

2 ALL DIMENSIONS ARE FOR NOMINAL REFERENCE ONLY UNLESS OTHERWISE STATED

3 PACKAGING: 20 PIECES IN A TRAY / BLISTER

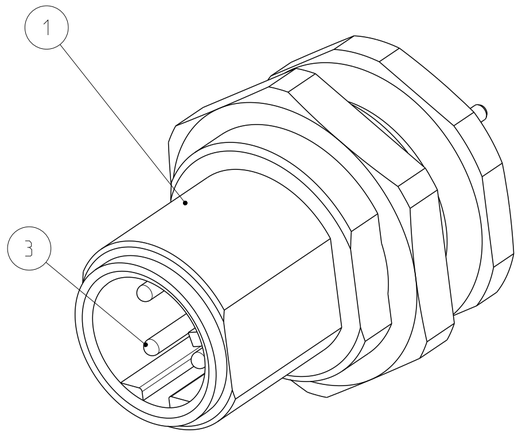

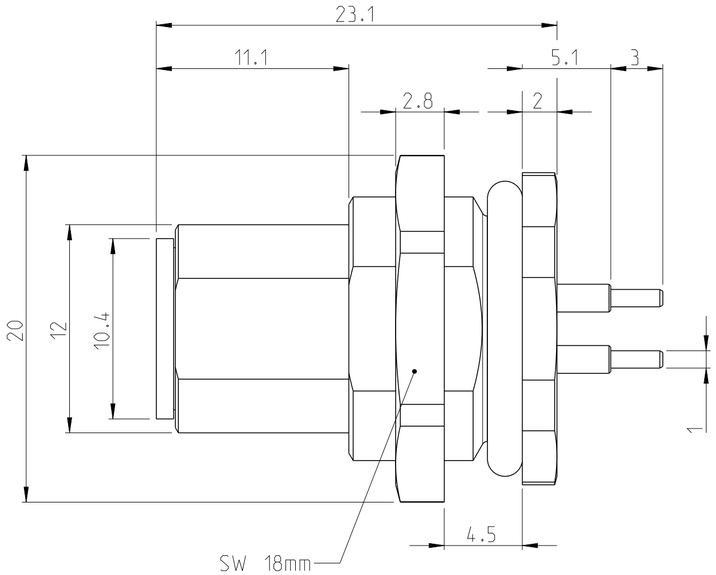

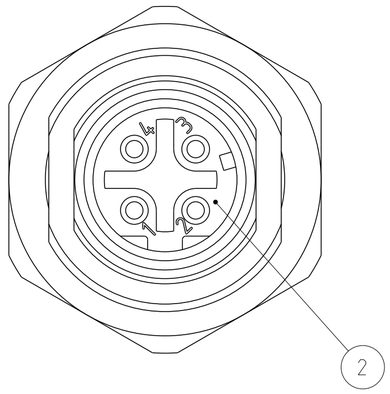

PIN ARRANGEMENT
D-CODING

3-2271142-2

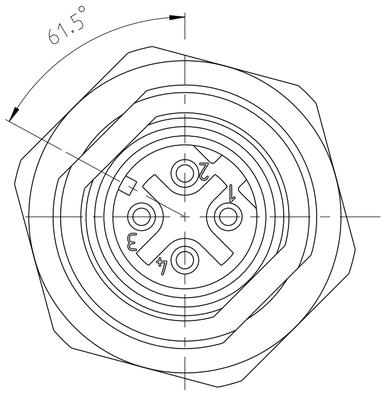

PCB LAYOUT

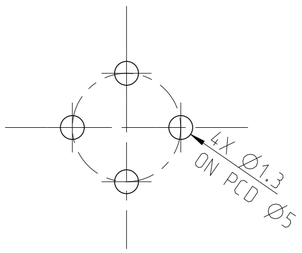

TECHNICAL DATA	3-2271142-2
RATED VOLTAGE	250V
RATED IMPULSE VOLTAGE	2500V
POLLUTION DEGREE	3
OVERVOLTAGE CATEGORY	II
MATERIAL GROUP	II
RATED CURRENT	4A
VOLUME RESISTIVITY	≤ 3mΩ
DEGREE OF PROTECTION	IP68
UPPER TEMPERATURE	+85°C
LOWER TEMPERATURE	-40°C

SIZE ISO 14405 (E)

DIESE ZEICHNUNG IST EIN KONTROLLIERTES DOKUMENT.
BEMASSUNGEN UND TOLERANZEN GEMAESS GPS (ISO STANDARDS).

THIS DRAWING IS A CONTROLLED DOCUMENT.
DIMENSIONING AND TOLERANCING PER GPS (ISO STANDARDS).

DIMENSIONS: MASSEINHEITEN: mm

TOLERANCES UNLESS OTHERWISE SPECIFIED: ALLGEMEINTOLERANZEN
0 PLC ±
1 PLC ±
2 PLC ±
3 PLC ±
4 PLC ±
ANGLES/WINKEL ±

MATERIAL: SEE NOTES
FINISH/OBERFLAECHE/FARBE: SEE NOTES

DWN YASHKUMAR 23MAY2014
CHK M.STRELOW 23MAY2014
APVD C.SCHRETTLINGER 23MAY2014
PRODUCT SPEC PRODUKTSPEZ. 108-19483
APPLICATION SPEC VERARBEITUNGSSPEZ. 114-32127
WEIGHT GEWICHT -

1	4	3-2271142-2
MATERIAL	NUMBER OF POLES	TE-PART-NO.

TE Connectivity

NAME
M12 MALE PCB MOUNTED CONNECTOR
STRAIGHT D-CODING

SIZE A2 | CAGE CODE 00779 | DRAWING NO ZEICHNUNGS-NR. C-2271142 | RESTRICTED TO NUR FUER -

Customer Drawing /KUNDENZEICHNUNG | SCALE MASSSTAB 4:1 | SHEET BLATT 1 OF VON 1 | REV A2

1471-9 (3/13)