THIS DRAWING IS UNPUBLISHED. RELEASED FOR PUBLICATION AUGUST ,2006.
© COPYRIGHT 2006 By – ALL RIGHTS RESERVED.

LOC	DIST
E	B

REVISIONS

P	LTR	DESCRIPTION	DATE	DWN	APVD
	D	REVISED PER ECO–12–019856	12NOV12	RZ	MY

NOTES:

1. PACK IN ACCORDANCE WITH AMP SPEC 107–3275
2. 100 TRAY PACK IN ACCORDANCE WITH AMP SPEC 107–3275
3. Au PLATING
4. Ni PLATING
5. ELECTRICAL CHARACTERISTICS

FREQUENCY RANGE:	DC – 1.8 GHz
NOMINAL IMPEDANCE:	50 Ohm
INSULATION RESISTANCE:	5000 MOhm
WORKING VOLTAGE:	335 Volts RMS Max Sea Level
DIELECTRIC WITHSTAND VOLTAGE:	1000 Volts RMS Max
CONTACT RESISTANCE:	
CENTRE CONTACT:	3 mOhm Max
OUTER CONTACT:	5 mOhm Max
VSWR @ 1.8GHz:	1.5 Max
INSERTION LOSS dB @ x 1.8 GHz:	0.5dB Max

6. MECHANICAL CHARACTERISTICS
   DURABILITY: 500 Cycles Min
7. ENVIRONMENTAL CHARACTERISTICS
   OPERATING TEMPERATURE: –40 to +60 DegC
8. FOR TECHNICAL DATA REFER TO YOUR LOCAL TE CONNECTIVITY SALES OFFICE
9. ALL DIMENSIONS ARE NOMINAL FOR REFERENCE ONLY UNLESS OTHERWISE STATED

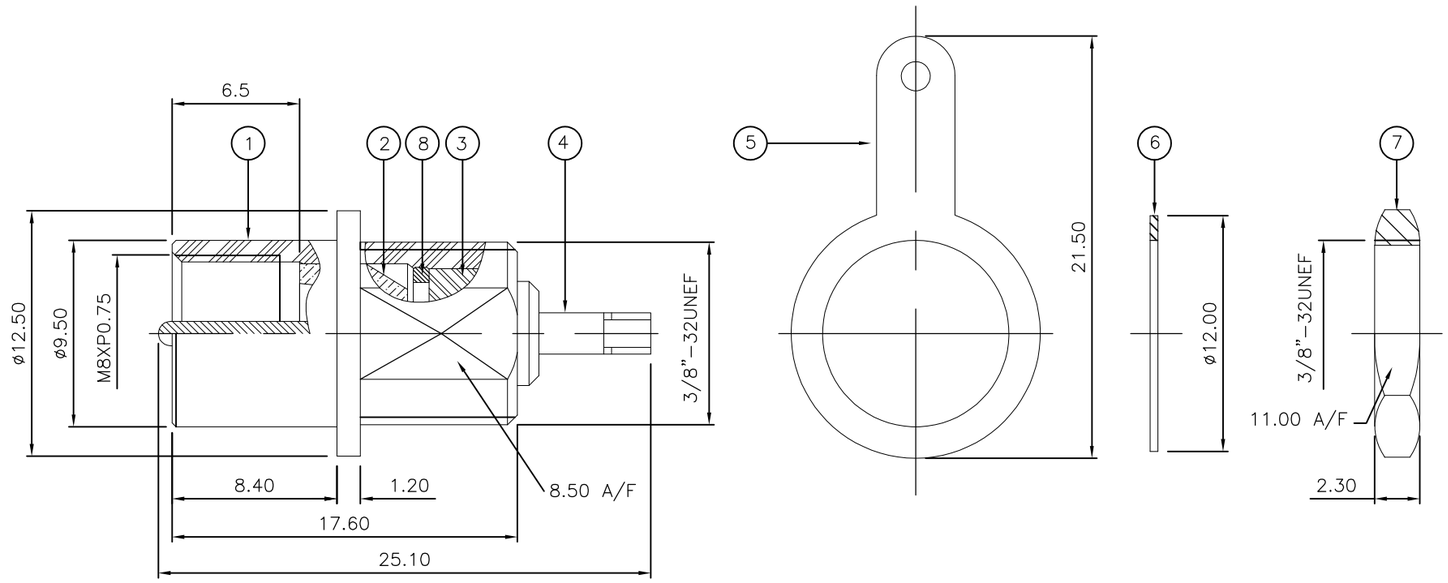

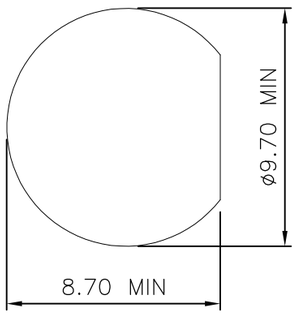

RECOMMENDED MOUNTING HOLE

		1	1	BRASS 4	WASHER	8
		1	1	BRASS 4	HEX. NUT	7
		1	1	BRASS 4	WASHER	6
		1	1	BRASS 4	SOLDER TAG	5
		1	1	BRASS 3	CONTACT	4
		1	1	POM	INSULATION	3
		1	1	POM	INSULATION	2
		1	1	BRASS 4	BODY	1
		6--0	1--0	MATERIAL	DESCRIPTION	ITEM
		2	1			
QUANTITY PER ASSY				PARTS LIST		

THIS DRAWING IS A CONTROLLED DOCUMENT.

DIMENSIONS: mm

TOLERANCES UNLESS OTHERWISE SPECIFIED:
0 PLC ± –
1 PLC ± –
2 PLC ± –
3 PLC ± –
4 PLC ± –
ANGLES ± –

MATERIAL: SEE TABLE

FINISH: –

DWN	J.SANDWELL	31AUG06
CHK	S.PARLOW	31AUG06
APVD	F.WHEELER–KING	31AUG06
PRODUCT SPEC	—	
APPLICATION SPEC	—	
WEIGHT	—	

TE Connectivity

NAME: FME BULKHEAD PLUG 50 OHM
–
–

SIZE	CAGE CODE	DRAWING NO	RESTRICTED TO
A3	00779	C–1337554	—

CUSTOMER DRAWING

SCALE	SHEET	REV
NTS	1 OF 1	D