THIS DRAWING IS UNPUBLISHED. RELEASED FOR PUBLICATION
© COPYRIGHT BY TYCO ELECTRONICS CORPORATION. ALL RIGHTS RESERVED.

LOC	DIST
ES	00

REVISIONS

P	LTR	DESCRIPTION	DATE	DWN	APVD
	B1	REVISED ECR-07-028230	26NOV07	A.L	S.Y

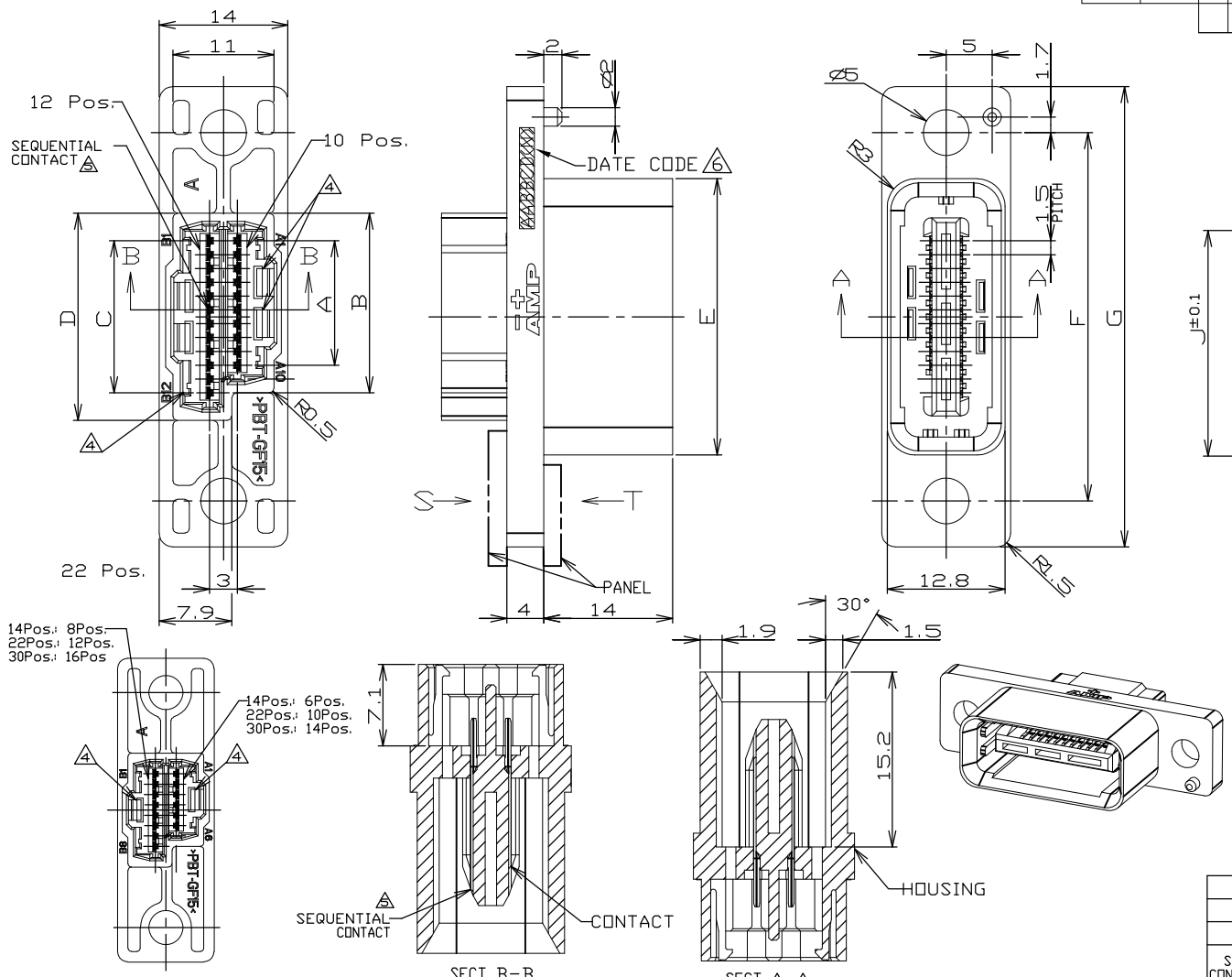

SEQUENTIAL CONT. LOCATION 5	WEIGHT (g)	K	J	H	G	F	E	D	C	B	A	Pos.	P/N
		DIMENSIONS											
B8	9.9	38	30.5	27.5	56	46	36	28.5	22.5	25.5	19.5	30	3-292234-0
B6	8.4	32	24.5	21.5	50	40	30	22.5	16.5	19.5	13.5	22	2-292234-2
B4	7.0	26	18.5	15.5	44	34	24	16.5	10.5	13.5	7.5	14	1-292234-4

NOTES:

1. USE WITH: MT REC CONN P/N: X-353293-X
   CRIMP HSG P/N: X-353908-X
   CRIMP CONT P/N: 353907-1
   353918-1(L/P)

2. MATERIAL:
   HOUSING: PBT G.F. UL94V-0 COLOR: BLACK
   CONTACT: BRASS

3. FINISH:
   CONTACT: NICKEL UNDERPLATE ALL OVER
   CONTACT AREA: GOLD PLATE.
   POST AREA: MATTE TIN PLATE.

4. LOCK: 14Pos-1LOCK/ROW, 22Pos-2LOCKS/ROW, 30Pos-3LOCKS/ROW.

5. LOCATION OF SEQUENTIAL CONTACT
   14Pos.: CIRCUIT No.B4 IN 8Pos.ROW
   22Pos. : CIRCUIT No.B6 IN 12Pos.ROW
   30Pos. : CIRCUIT No.B8 IN 16Pos.ROW

6. LOCATION OF DATE CODE: AABBCD(N)
   (AA: YEAR, BB: WEEK, C: DAY OF WEEK,
   D: DAYTIME, N: NIGHT)

THIS DRAWING IS A CONTROLLED DOCUMENT FOR TYCO ELECTRONICS CORPORATION. IT IS SUBJECT TO CHANGE AND THE CONTROLLING ENGINEERING ORGANIZATION SHOULD BE CONTACTED FOR THE LATEST REVISION.

DIMENSIONS: mm

TOLERANCES UNLESS OTHERWISE SPECIFIED:
0 PLC ±
1 PLC ±0.1
2 PLC ±0.01
3 PLC ±0.001
4 PLC ±0.0001
ANGLES ±

MATERIAL 2 | FINISH 3

DWN	S.XU	31JAN03
CHK	S.YAO	31JAN03
APVD	T.SASAKI	31JAN03
PRODUCT SPEC	108-60026	
APPLICATION SPEC	—	
WEIGHT	SEE TABLE	

Tyco Electronics
Tyco Electronics Corporation
Shanghai, PRC

NAME
PLUG ASS'Y for DC TYPE
1.5mm PITCH MINI CT DRAWER CONNECTOR

SIZE	CAGE CODE	DRAWING NO	RESTRICTED TO
A3	00779	C- 292234	—

CUSTOMER DRAWING | SCALE 3:2 | SHEET 1 OF 1 | REV B1