THIS DRAWING IS UNPUBLISHED. RELEASED FOR PUBLICATION -,- .
© COPYRIGHT - BY TYCO ELECTRONICS CORPORATION. ALL RIGHTS RESERVED.

| LOC | DIST |
|---|---|
| AD | 00 |

REVISIONS

| P | LTR | DESCRIPTION | DATE | DWN | APVD |
|---|---|---|---|---|---|
| | G | EC 0G3C 0864 04 | 26MAY05 | BSV | JLG |
| | G1 | REVISED PER ECO-10-000443 | 12JAN10 | KK | AEG |

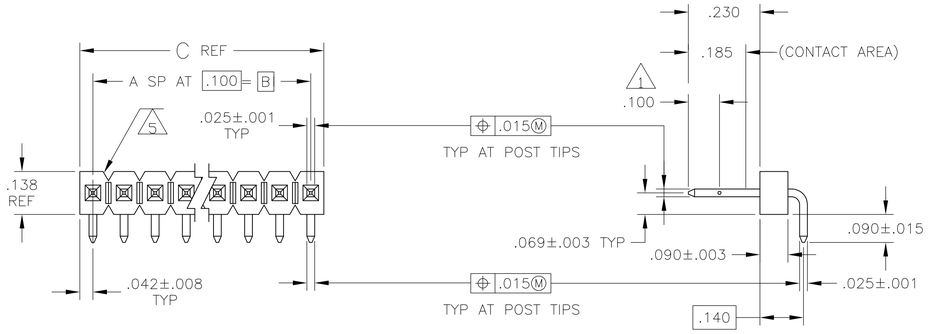


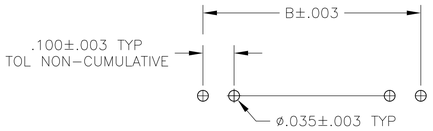


RECOMMENDED HOLE LAYOUT

| REMARKS | PLATING | C | B | A | NO OF POS | ASSEMBLY PART NUMBER |
|---|---|---|---|---|---|---|
| | 7 6 | 3.984 | 3.900 | 39 | 40 | 9-103765-0 |
| OBSOLETE | 7 6 | ~~3.484~~ | ~~3.400~~ | ~~34~~ | ~~35~~ | ~~8 - 5~~ |
| | 7 6 | ~~2.984~~ | ~~2.900~~ | ~~29~~ | ~~30~~ | ~~8 - 0~~ |
| | 7 6 | ~~2.484~~ | ~~2.400~~ | ~~24~~ | ~~25~~ | ~~7 - 5~~ |
| | 7 6 | 1.984 | 1.900 | 19 | 20 | 7 - 0 |
| OBSOLETE | 7 6 | ~~1.484~~ | ~~1.400~~ | ~~14~~ | ~~15~~ | ~~6 - 5~~ |
| | 7 6 | 1.384 | 1.300 | 13 | 14 | 6 - 4 |
| OBSOLETE | 7 6 | ~~1.284~~ | ~~1.200~~ | ~~12~~ | ~~13~~ | ~~6 - 3~~ |
| | 7 6 | ~~1.184~~ | ~~1.100~~ | ~~11~~ | ~~12~~ | ~~6 - 2~~ |
| | 7 6 | 1.084 | 1.000 | 10 | 11 | 6 - 1 |
| OBSOLETE | 7 6 | ~~.984~~ | ~~.900~~ | ~~9~~ | ~~10~~ | ~~6 - 0~~ |
| | 7 6 | ~~.884~~ | ~~.800~~ | ~~8~~ | ~~9~~ | ~~5 - 9~~ |
| | 7 6 | .784 | .700 | 7 | 8 | 5 - 8 |
| OBSOLETE | 7 6 | ~~.684~~ | ~~.600~~ | ~~6~~ | ~~7~~ | ~~5 - 7~~ |
| | 7 6 | .584 | .500 | 5 | 6 | 5 - 6 |
| | 7 6 | .484 | .400 | 4 | 5 | 5 - 5 |
| OBSOLETE | 7 6 | ~~.384~~ | ~~.300~~ | ~~3~~ | ~~4~~ | ~~5 - 4~~ |
| | 7 6 | .284 | .200 | 2 | 3 | 5 - 3 |
| | 7 6 | ~~.184~~ | ~~.100~~ | ~~1~~ | ~~2~~ | ~~5 - 2~~ |
| OBSOLETE | 7 6 | ~~.084~~ | —— | —— | ~~1~~ | ~~5-103765-1~~ |
| | 4 | 3.984 | 3.900 | 39 | 40 | 4-103765-0 |
| OBSOLETE | 4 | 3.884 | 3.800 | 38 | 39 | 3 - 9 |
| OBSOLETE | 4 | 3.784 | 3.700 | 37 | 38 | 3 - 8 |
| OBSOLETE | 4 | 3.684 | 3.600 | 36 | 37 | 3 - 7 |
| OBSOLETE | 4 | 3.584 | 3.500 | 35 | 36 | 3 - 6 |
| 8 OBSOLETE | 4 | ~~3.484~~ | ~~3.400~~ | ~~34~~ | ~~35~~ | ~~3 - 5~~ |
| OBSOLETE | 4 | 3.284 | 3.300 | 33 | 34 | 3 - 4 |
| OBSOLETE | 4 | 3.284 | 3.200 | 32 | 33 | 3 - 3 |
| OBSOLETE | 4 | 3.184 | 3.100 | 31 | 32 | 3 - 2 |
| OBSOLETE | 4 | 3.084 | 3.000 | 30 | 31 | 3 - 1 |
| 8 OBSOLETE | 4 | ~~2.984~~ | ~~2.900~~ | ~~29~~ | ~~30~~ | ~~3 - 0~~ |
| OBSOLETE | 4 | 2.884 | 2.800 | 28 | 29 | 2 - 9 |
| OBSOLETE | 4 | 2.784 | 2.700 | 27 | 28 | 2 - 8 |
| OBSOLETE | 4 | 2.684 | 2.600 | 26 | 27 | 2 - 7 |
| OBSOLETE | 4 | 2.584 | 2.500 | 25 | 26 | 2 - 6 |
| 8 OBSOLETE | 4 | ~~2.484~~ | ~~2.400~~ | ~~24~~ | ~~25~~ | ~~2 - 5~~ |
| OBSOLETE | 4 | 2.384 | 2.300 | 23 | 24 | 2 - 4 |
| OBSOLETE | 4 | 2.284 | 2.200 | 22 | 23 | 2 - 3 |
| OBSOLETE | 4 | 2.184 | 2.100 | 21 | 22 | 2 - 2 |
| OBSOLETE | 4 | 2.084 | 2.000 | 20 | 21 | 2 - 1 |
| | 4 | 1.984 | 1.900 | 19 | 20 | 2 - 0 |
| OBSOLETE | 4 | 1.884 | 1.800 | 18 | 19 | 1 - 9 |
| OBSOLETE | 4 | 1.784 | 1.700 | 17 | 18 | 1 - 8 |
| OBSOLETE | 4 | 1.684 | 1.600 | 16 | 17 | 1 - 7 |
| OBSOLETE | 4 | 1.584 | 1.500 | 15 | 16 | 1 - 6 |
| | 4 | 1.484 | 1.400 | 14 | 15 | 1 - 5 |
| 8 SUPERCEDED BY 6-103765-4 | 4 | ~~1.384~~ | ~~1.300~~ | ~~13~~ | ~~14~~ | ~~1 - 4~~ |
| 8 OBSOLETE | 4 | ~~1.284~~ | ~~1.200~~ | ~~12~~ | ~~13~~ | ~~1 - 3~~ |
| | 4 | 1.184 | 1.100 | 11 | 12 | 1 - 2 |
| 8 SUPERCEDED BY 6-103765-1 | 4 | ~~1.084~~ | ~~1.000~~ | ~~10~~ | ~~11~~ | ~~1 - 1~~ |
| 8 | 4 | ~~.984~~ | ~~.900~~ | ~~9~~ | ~~10~~ | ~~1 - 0~~ |
| OBSOLETE | 4 | ~~.884~~ | ~~.800~~ | ~~8~~ | ~~9~~ | ~~- 9~~ |
| | 4 | .784 | .700 | 7 | 8 | - 8 |
| 8 OBSOLETE | 4 | ~~.684~~ | ~~.600~~ | ~~6~~ | ~~7~~ | ~~- 7~~ |
| | 4 | .584 | .500 | 5 | 6 | - 6 |
| | 4 | .484 | .400 | 4 | 5 | - 5 |
| | 4 | .384 | .300 | 3 | 4 | - 4 |
| | 4 | .284 | .200 | 2 | 3 | - 3 |
| | 4 | .184 | .100 | 1 | 2 | - 2 |
| 8 OBSOLETE | 4 | ~~.084~~ | —— | —— | ~~1~~ | ~~103765-1~~ |

1. POINT OF MEASUREMENT FOR PLATING THICKNESS
2. ASSEMBLY MAY BE BROKEN TO THE DESIRED NUMBER OF POSITIONS.
3. TRUE POSITION TOLERANCE OF THE POST TIPS APPLIES WHEN THE HEADERS ARE HELD FLAT AGAINST THE PRINTED CIRCUIT BOARD
4. .000030 GOLD IN CONTACT AREA, .000100-.000200 MATTE TIN-LEAD ON SOLDER TAIL, ALL OVER .000050 NICKEL
5. BREAKAWAY NOTCH ANGLE CAN BE ORIENTED TO THE RIGHT (AS SHOWN) OR TO THE LEFT
6. .000030 GOLD IN CONTACT AREA, .000100-.000200 MATTE TIN ON SOLDER TAIL, ALL OVER .000050 NICKEL
7. HIGH TEMPERATURE CONFIGURATION
8. OBSOLETE PARTS: OBSOLETE CIS STREAMLINING PER D.RENAUD/D.SINISI

THIS DRAWING IS A CONTROLLED DOCUMENT.

DIMENSIONS: INCHES

TOLERANCES UNLESS OTHERWISE SPECIFIED:
0 PLC ± -
1 PLC ± -
2 PLC ± -
3 PLC ± .005
4 PLC ± -
ANGLES ± -

MATERIAL: HOUSING: FLAME RETARDANT THERMOPLASTIC, COLOR-BLACK
POSTS: PHOS BRONZE

FINISH: SEE TABLE

DWN L. D. RINGLEY 24JUL85
CHK R. ELICKER 24JUL85
APVD R. ELICKER 24JUL85

PRODUCT SPEC -
APPLICATION SPEC -
WEIGHT -

CUSTOMER DRAWING

Tyco Electronics
Tyco Electronics Corporation
Harrisburg, Pa 17105-3608

NAME: ASSEMBLY, MOD II, HEADER, BREAKAWAY, SINGLE ROW, RIGHT ANGLE 100, , WITH .025 SQUARE POSTS

| SIZE | CAGE CODE | DRAWING NO | RESTRICTED TO |
|---|---|---|---|
| A1 | 00779 | C-103765 | - |

SCALE 4:1 SHEET 1 OF 1 REV G1

AMP 4805 REV 31MAR2000