THIS DRAWING IS UNPUBLISHED. RELEASED FOR PUBLICATION -,- .
© COPYRIGHT - By - ALL RIGHTS RESERVED.

LOC	DIST
AF	50

REVISIONS

P	LTR	DESCRIPTION	DATE	DWN	APVD
	H	REVISED PER ECR-12-013459	29NOV2012	KH	PD

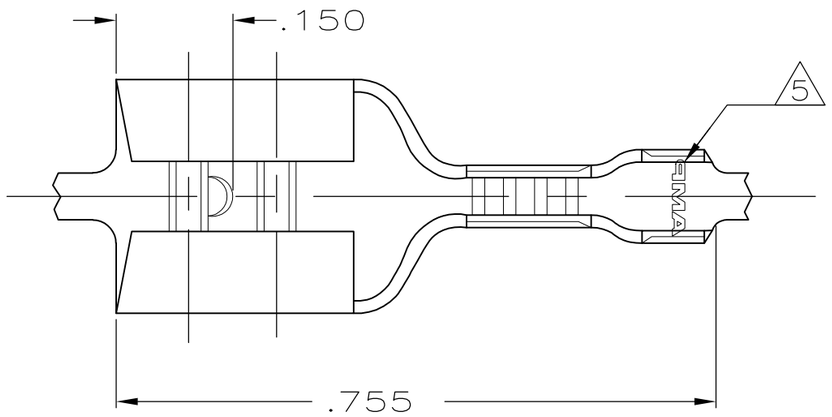

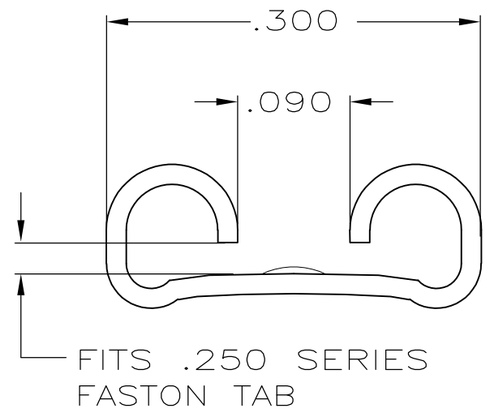

VIEW A—A
SCALE 8:1

1 CONTINUOUS STRIP ON REELS

2 MATERIAL BRASS – TIN PLATE

3 MATERIAL #2H STEEL – GOLD PLATE .000050 MIN OVER NICKEL.

4 MATERIAL T3 PHOS BRZ – TIN PLATE

5 FOR 61368-3 ONLY, AMP*. ALL OTHERS JUST AMP.

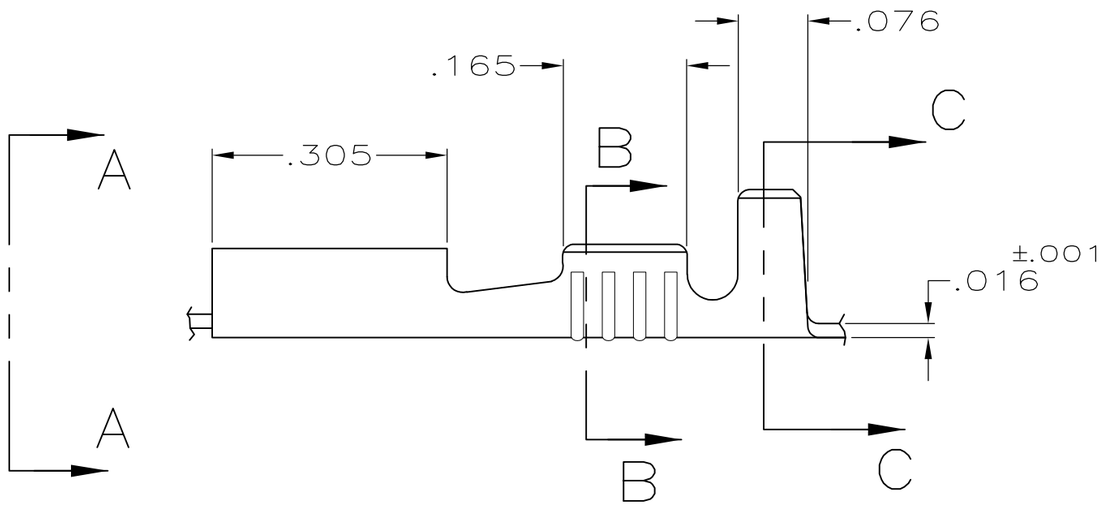

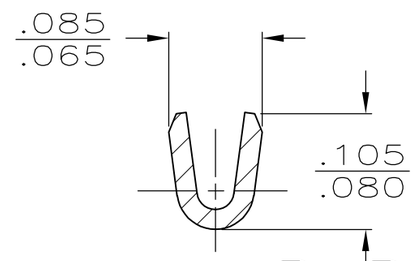

SECTION B—B
SCALE 8:1

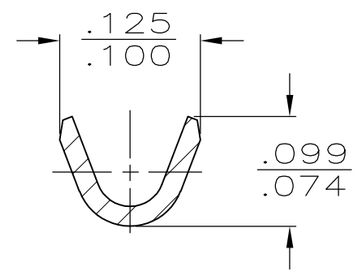

SECTION C—C
SCALE 8:1

	INSUL RANGE	WIRE SIZE	MATING TAB THK ±.001	MATERIAL FINISH	PART NO
	.030–.070	24–20	.032	4	61368–3
OBSOLETE	.030–.070	24–20	.032	3	~~61368–2~~
	.030–.070	24–20	.032	2	61368–1

THIS DRAWING IS A CONTROLLED DOCUMENT.

DIMENSIONS: INCHES

TOLERANCES UNLESS OTHERWISE SPECIFIED:
0 PLC ± –
1 PLC ± –
2 PLC ± –
3 PLC ± .010
4 PLC ± –
ANGLES ± –

MATERIAL: SEE TABLE
FINISH: SEE TABLE

DWN JR RUTH 12/3/90
CHK MS FEHER 12/3/90
APVD C MEYERS 12/3/90
PRODUCT SPEC —
APPLICATION SPEC —
WEIGHT —

TE Connectivity

NAME: RECEPTACLE, FASTON™, .250 SERIES

SIZE	CAGE CODE	DRAWING NO	RESTRICTED TO
A3	00779	C-61368	—

CUSTOMER DRAWING

SCALE	SHEET	REV
5:1	1 OF 1	H