MICRO SWITCH
A DIVISION OF MINNEAPOLIS-HONEYWELL REGULATOR COMPANY
FREEPORT, ILLINOIS
FED. MFR. CODE 91929

PACKET

CATALOG LISTING
9PA45 ★

9PA45	REPLACES
M	RELEASE NO. SR 9603
DRAWING NUMBER	
X 2	
ISSUE	

REVISIONS			
A	CO 17089	M B F	12 SEP 63

CHECK	18 APR 61	
CHECK	EAS	18 APR 61
CHECK	DAW	18 APR '61
CHECK	61	
DRAWN	K L B	17 APR 61

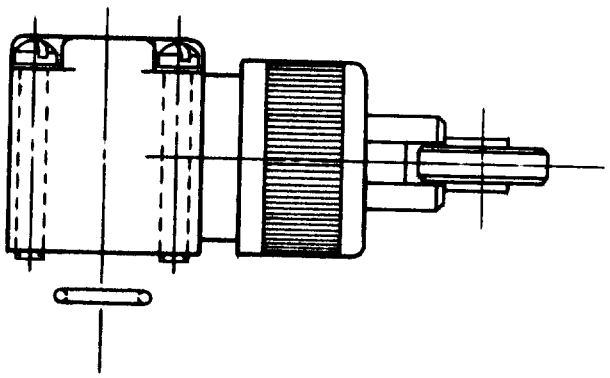

NOTE –
1– SEAL RING FURNISHED UNASSEMBLED WITH PACKET

THIS DRAWING COVERS A PROPRIETARY ITEM AND IS THE PROPERTY OF MICRO SWITCH, A DIVISION OF MINNEAPOLIS-HONEYWELL REGULATOR CO. THIS DRAWING IS NOT TO BE COPIED OR USED WITHOUT THE APPROVAL OF MICRO SWITCH.

CHARACTERISTICS

ELECTRICAL DATA

CONTACT ARRANGEMENT	BREAK DISTANCE

SCALE FULL

DO NOT SCALE PRINT

UNLESS OTHERWISE SPECIFIED
DIMENSIONS ARE IN INCHES
TOLERANCES ARE:

ONE PLACE	(.0)	±.030
TWO PLACE	(.00)	±.015
THREE PLACE	(.000)	±.005
ANGLES		±

WEIGHT

FO–50378