THIS DRAWING IS UNPUBLISHED. RELEASED FOR PUBLICATION –,– .
© COPYRIGHT – By – ALL RIGHTS RESERVED.

LOC	DIST
G	14

REVISIONS

P	LTR	DESCRIPTION	DATE	DWN	APVD
	D1	REVISED PER ECO–14–014952	30DEC2014	NK	DR

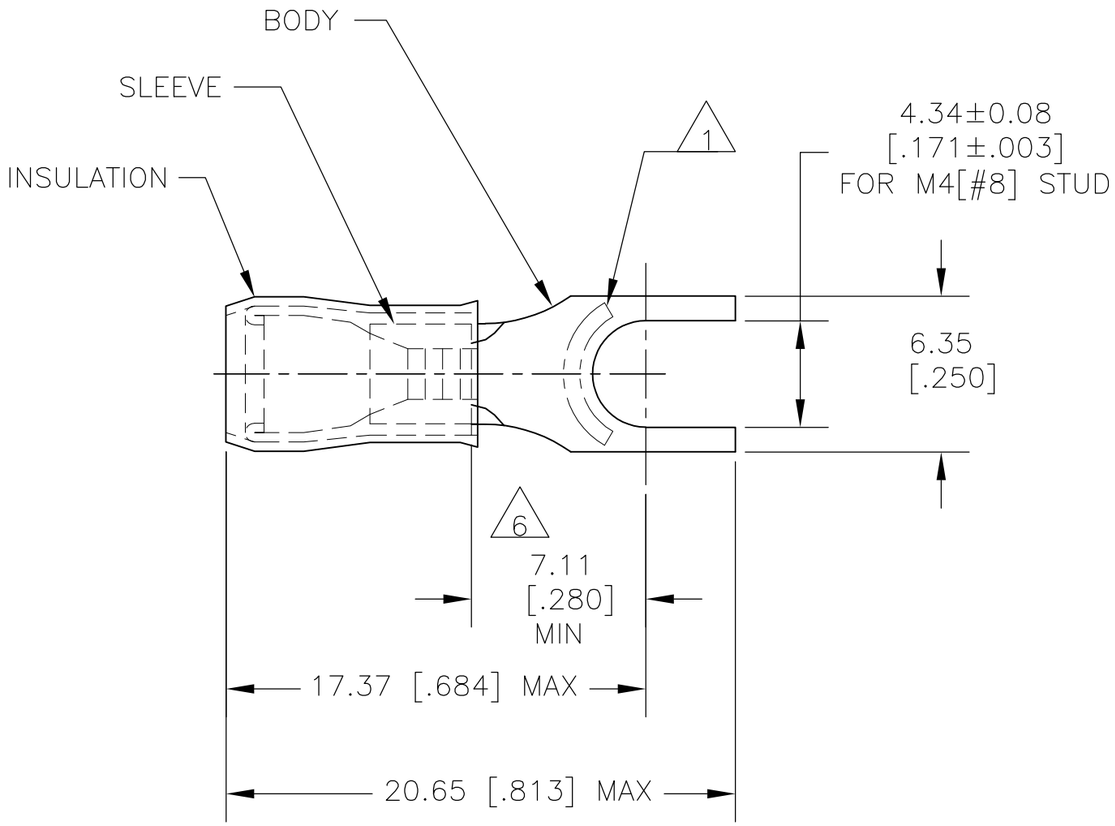

1. STAMP AMP 16–14* APPROX AS SHOWN.
2. WIRE INSULATION DIA: 2.90–4.30 [.115–.170].
3. TONGUE MATERIAL THK: 0.78±0.05 [.031±.002].
4. BODY & SLEEVE: TIN PLATE PER ASTM B545.
5. BODY & SLEEVE– CU PER ASTM B152
   INSULATION – NYLON, COLOR – BLUE.
6. APPLIES FROM EDGE OF METAL WIRE BARREL
   TO CENTER OF STUD HOLE.

QTY	PACKAGE TYPE	PART NO
5000	ON TAPE	2–130532–1
1000	LOOSE PIECE	130532

AMP INCORPORATED
CUSTOMER SERVICE SYSTEMS

FOR ADDITIONAL PRODUCT INFORMATION OR COPIES OF DRAWINGS AND TECHNICAL DOCUMENTS	PRODUCT INFORMATION CENTER 1–800–522–6752
FOR APPLICATION TOOLING INFORMATION	TOOLING ASSISTANCE CENTER 1–800–722–1111
FOR ORDER ENTRY	1–800–526–5142

THIS DRAWING IS A CONTROLLED DOCUMENT FOR TE INCORPORATED. IT IS SUBJECT TO CHANGE AND THE CONTROLLING ENGINEERING ORGANIZATION SHOULD BE CONTACTED FOR THE LATEST REVISION.

MAX RECOMMENDED OPERATING TEMPERATURE: 105°C[221°F] MAX

VOLTAGE RATING: –

CIRCULAR MIL AREA: 1.04–2.62mm² [2,050–5,180] STRANDED

THIS DRAWING IS A CONTROLLED DOCUMENT.

DIMENSIONS: MM [INCHES]

TOLERANCES UNLESS OTHERWISE SPECIFIED:
0 PLC ± –
1 PLC ± –
2 PLC ± –
3 PLC ± –
4 PLC ± –
ANGLES ± –

MATERIAL 5

FINISH 4

DWN	JR RUTH	10JAN08
CHK	T MICHIELUTTI	10JAN08
APVD	T MICHIELUTTI	10JAN08
PRODUCT SPEC	—	
APPLICATION SPEC	—	
WEIGHT	—	

TE Connectivity

NAME: TERMINAL, RECTANGULAR TONGUE, PIDG
WIRE SIZE: 16–14 AWG

SIZE	CAGE CODE	DRAWING NO	RESTRICTED TO
A3	00779	C–130532	—

CUSTOMER DRAWING | SCALE 4:1 | SHEET 1 OF 1 | REV D1

1470–19 (3/11)