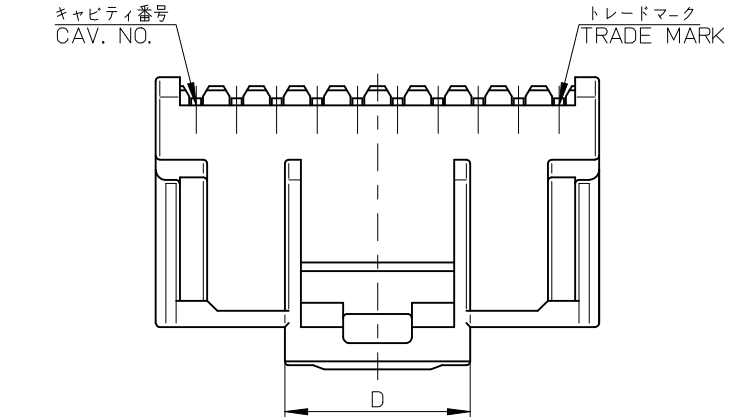

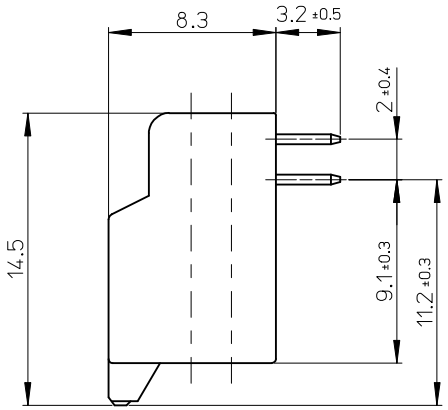

注記
NOTES

1. 材料 MATERIAL
   ピン : 黄銅。ニッケル下地錫メッキ
   PIN : BRASS, REFLOWED TIN OVER COPPER PLATED
   ハウジング : 66ナイロン(ガラス入り), UL94V-0
   HOUSING : 66NYLON (G.F.), UL94V-0
2. 嵌合相手 MATES WITH

REC. CRIMP HOUSING	501646 SERIES
REC. CRIMP TERMINAL	
AWG #22-26 TIN PLATING	501647 SERIES
AWG #26-28 TIN PLATING	501648 SERIES

3. 製品番号
   MATERIAL NO.
   501876-**4*
   極数 CIRCUIT SIZE　色 COLOR

4. (全極数/2)=偶数の場合に適用。
   APPLY FOR (CIRCUIT/2)=EVEN
5. ELV及びRoHS 適合品
   ELV AND RoHS COMPLIANT.

ナチュラル NATURAL	0
黒 BLACK	1
赤 RED	2
黄 YELLOW	3
青 BLUE	4
桃 PINK	5
緑 GREEN	6
茶 BROWN	7
橙 ORANGE	8
紫 VIOLET	9

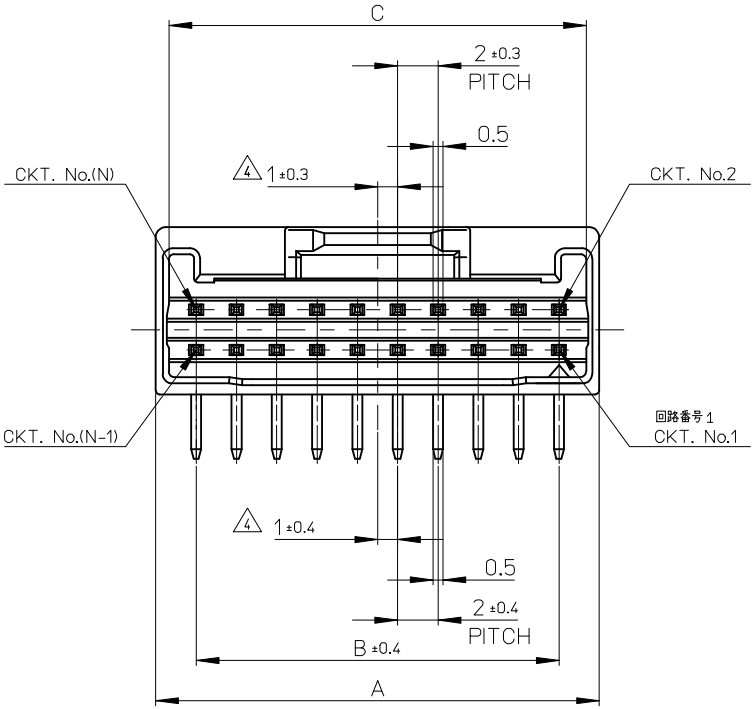

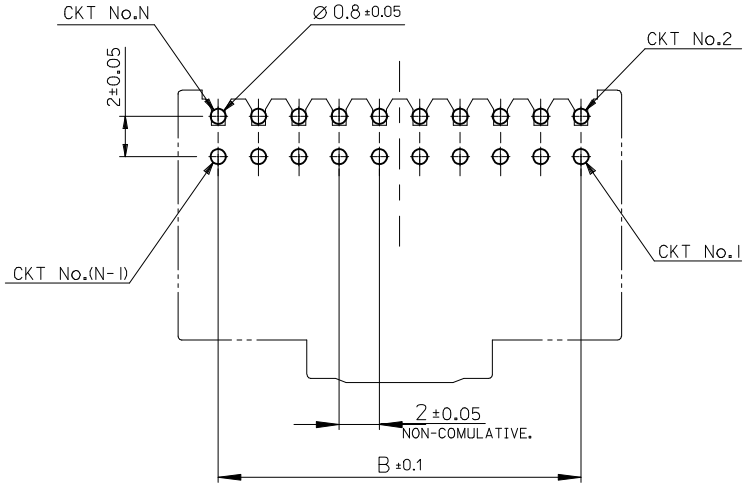

基板取付穴推奨寸法(マウント面)
RECOMMENDED P.C.BOARD HOLE DIMENSION (MOUNTING SIDE)
(t=1.2~1.6)

D	C	B	A	3 MATERIAL NO.	CKT.
9.2	40.7	38	42	501876-404*	40
9.2	38.7	36	40	-384*	38
9.2	36.7	34	38	-364*	36
9.2	34.7	32	36	-344*	34
9.2	32.7	30	34	-324*	32
9.2	30.7	28	32	-304*	30
9.2	28.7	26	30	-284*	28
9.2	26.7	24	28	-264*	26
9.2	24.7	22	26	-244*	24
9.2	22.7	20	24	-224*	22
9.2	20.7	18	22	-204*	20
9.2	18.7	16	20	-184*	18
9.2	16.7	14	18	-164*	16
9.2	14.7	12	16	-144*	14
9.2	12.7	10	14	-124*	12
7.3	10.7	8	12	501876-104*	10

REVISED
EC NO: J2017-0032 2016/07/04
DRWN:AIDA 2016/07/04
CHKD:SAKIYAMA 2016/07/12
APPR:TKANEKO
REV: G
DESCRIPTION

GENERAL TOLERANCES (UNLESS SPECIFIED)

0.25	UNDER		UNDER	±0.03
0.25	OVER	0.5	UNDER	±0.05
0.5	OVER	1.0	UNDER	±0.1
1.0	OVER	10	UNDER	±0.2
10	OVER	30	UNDER	±0.25
30	OVER			±0.3
ANGULAR		±3	°	

DRAFT WHERE APPLICABLE MUST REMAIN WITHIN DIMENSIONS

DIMENSION STYLE: MM ONLY
SCALE: 4:1
DESIGN UNITS: METRIC
THIRD ANGLE PROJECTION

DRAWN BY: ERIGUCHI DATE: '05/07/08
CHECKED BY: ASAKAWA DATE: '05/07/08
APPROVED BY: ICHIKAWA DATE: '05/07/08

TITLE: IGRID 2.0MM W/B DUAL DIP PLUG ASSY RA

molex

MATERIAL NO.: 501876-**4*
DOCUMENT NO.: SD-501876-001
SHEET NO.: 1 OF 1
SIZE: A3

THIS DRAWING CONTAINS INFORMATION THAT IS PROPRIETARY TO MOLEX ELECTRONIC TECHNOLOGIES, LLC AND SHOULD NOT BE USED WITHOUT WRITTEN PERMISSION