DRAWING MADE IN THIRD ANGLE PROJECTION
THIS DRAWING IS UNPUBLISHED. RELEASED FOR PUBLICATION ,19 .
© COPYRIGHT 19 BY AMP INCORPORATED. ALL INTERNATIONAL RIGHTS RESERVED.

LOC	DIST
FT	8

REVISIONS

ZONE	LTR	DESCRIPTION	DATE	APPD
	Y	REDRAWN W/O CHANGE & REV PER EC 0020-307-94	06/03/94	TC
	Z	OBS -13,-14,-15 PER EC 0020-0182-93	11/29/94	RK
	AA	OBS -16 PER EC 0020-1325-94	04/20/95	GS
	AB	REV PER EC 0320-22-98	22JAN98	GS
	AB1	REVISED PER ECO-09-020935	09SEP09	AEG

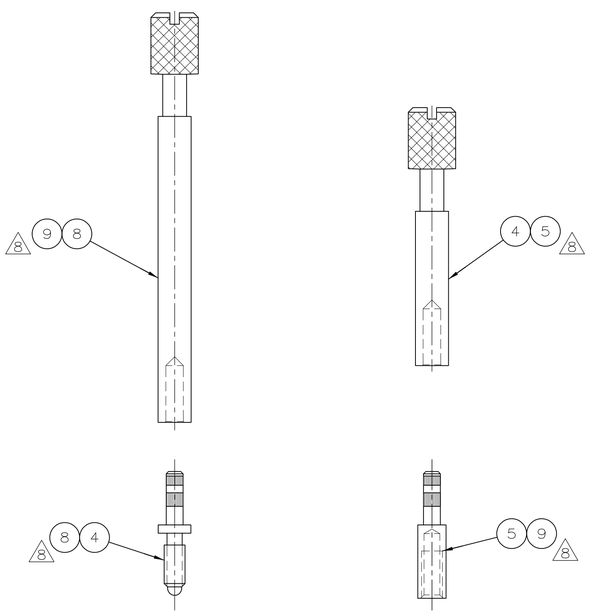

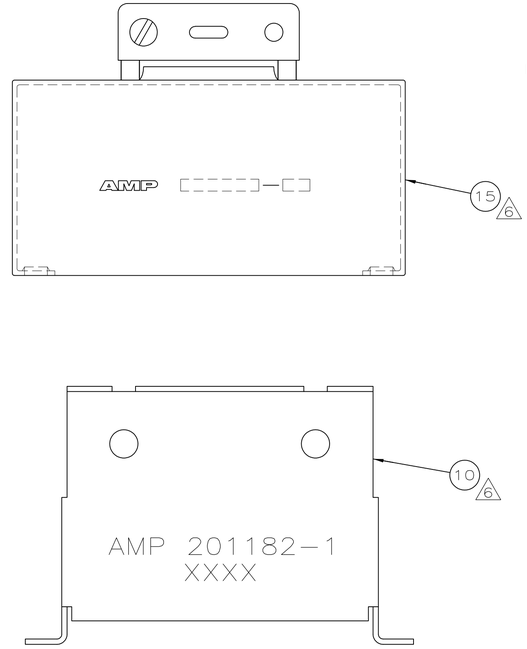

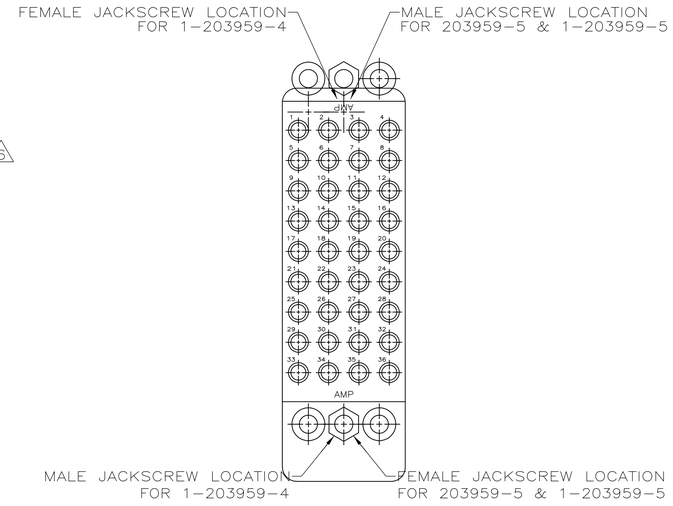

MATING FACE OF
203956-2 BLOCK

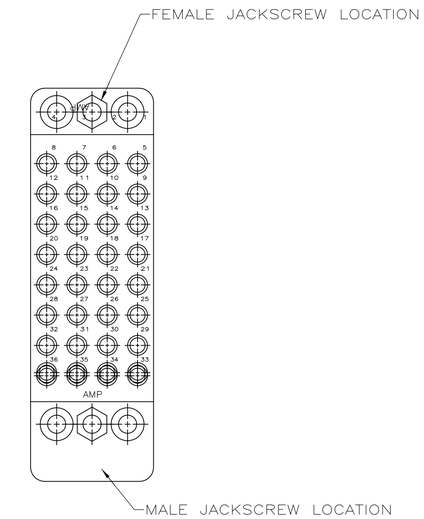

MATING FACE OF
205076-2 BLOCK

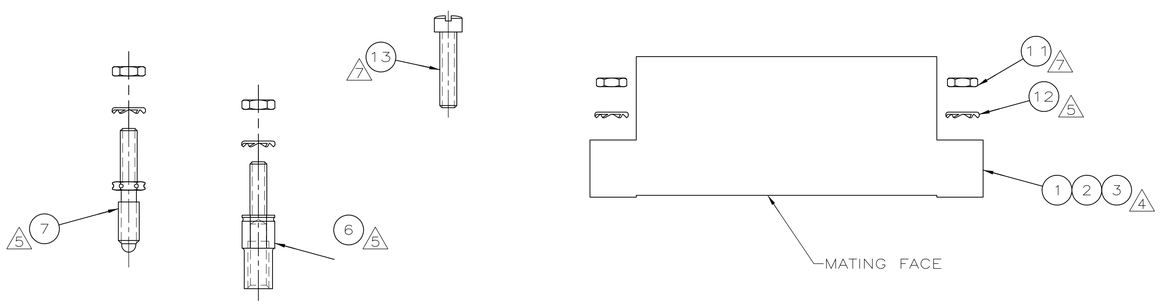

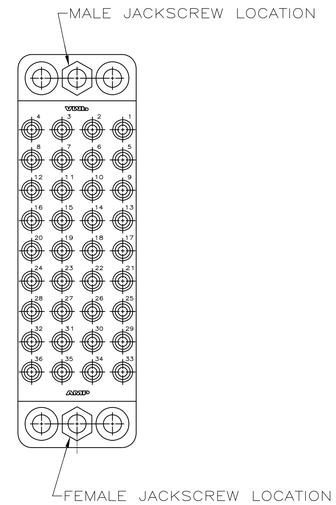

MATING FACE OF
205629-5 BLOCK

1-6	1-5	1-4	1-3	-6	-5	PART NO	DESCRIPTION	ITEM NO
1	–	1	–	–	–	200532-2	180° SHIELD, SHORT,2PLC	15
1	–	–	–	–	–	201390-5	PIN HOOD, INTERNAL	14
–	2	–	–	–	–	200330-2	SCREW	13
–	2	–	–	–	–	200503-1	LOCKWASHER	12
–	2	–	–	–	–	200773-2	NUT	11
–	1	–	–	–	–	201182-1	STRAIN RELIEF ASSY,SHORT	10
–	–	–	–	–	1	205269-1	JACKSCREW ASSY,FEMALE	9
–	–	–	–	–	1	205268-1	JACKSCREW ASSY,MALE	8
–	1	–	1	1	–	200874-1	FIXED JACKSCREW ASSY,MALE	7
–	1	–	1	1	–	200875-1	FIXED JACKSCREW ASSY,FEMALE	6
1	–	1	–	–	–	205191-1	JACKSCREW ASSY,FEMALE,LONG	5
1	–	1	–	–	–	205190-1	JACKSCREW ASSY,MALE,LONG	4
–	–	–	1	–	–	205629-5	BLOCK	3
1	–	–	–	1	–	205076-2	BLOCK	2
–	1	1	–	–	1	203956-2	BLOCK	1

3 3 3 3 9 3 3

1. REFER TO COMPONENT DRAWINGS FOR DETAILS.
2. FOR MATING KITS SEE AMP DWG NO 203958, EXCEPT FOR 203959-6.

3. FULLY ASSEMBLED.
4. PHENOLIC, BLACK.
5. STAINLESS STEEL.
6. STEEL, NICKEL PLATED.
7. STEEL, ZINC PLATED.
8. BODY: BRASS, ZINC PLATED; TIP: STAINLESS STEEL.
9. OBSOLETE PARTS: OBSOLETE CIS STREAMLINING PER D.RENAUD/D.SINISI

DO NOT SCALE PRINT. UNLESS SPECIFIED
DIMENSIONS IN mm [INCHES]
TOLERANCES ON :
2 PLC DEC ±-
3 PLC DEC ± -
ANGLES ± -

MATERIAL –

FINISH –

DR 06/03/94 K.FOLTZ
CHK 06/16/94 R.STONE
APPD 06/17/94 T.COULSON
APPD 06/17/94 T.COULSON
PRODUCT SPEC –
APPLICATION SPEC –
WEIGHT –

AMP Incorporated
Harrisburg, PA 17105-3608

NAME
CONNECTOR KIT, .200 GRID, AUTO-WIRING, 36 POSN, M SERIES

SIZE D | CAGE CODE 00779 | DRAWING NO C-203959
SCALE 2:1 | SHEET 1 OF 1

THIS DRAWING IS A CONTROLLED DOCUMENT FOR AMP INCORPORATED. IT IS SUBJECT TO CHANGE AND THE CONTROLLING ENGINEERING ORGANIZATION SHOULD BE CONTACTED FOR THE LATEST REVISION.

CUSTOMER DRAWING