molex

MX150 2X8 BLADE SEALED ASSEMBLY MAT SEAL
BOM AND PIN OUT SHEET

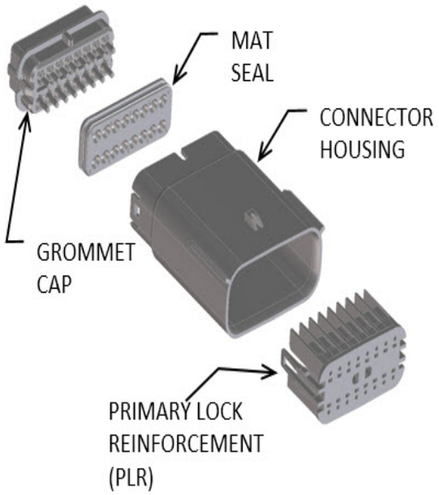

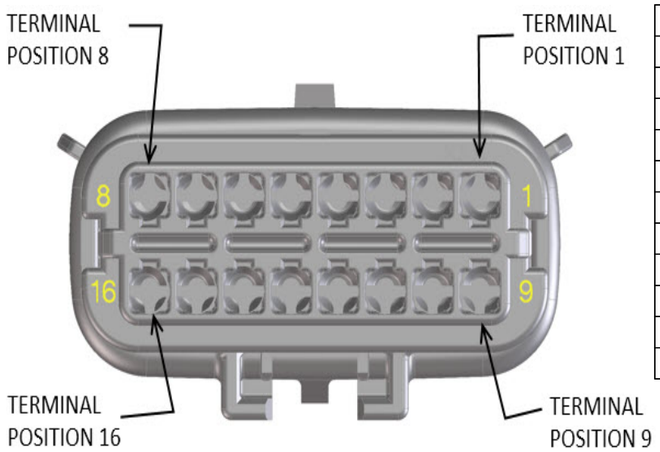

ABBREVIATION	DESCRIPTION	COLOR	MATERIAL
A-BLACK	HOUSING, KEYING OPTION A	BLACK	SPS/NYLON GF20
B-LIGHT GRAY	HOUSING, KEYING OPTION B	LIGHT GRAY	SPS/NYLON GF20
C-BROWN	HOUSING, KEYING OPTION C	BROWN	SPS/NYLON GF20
D-GREEN	HOUSING, KEYING OPTION D	GREEN	SPS/NYLON GF20
A-YELLOW	HOUSING, KEYING OPTION A	YELLOW	SPS/NYLON GF20
C-DARK GRAY	HOUSING, KEYING OPTION C	DARK GRAY	SPS/NYLON GF20
D-STONE GRAY	HOUSING, KEYING OPTION D	STONE GRAY	SPS/NYLON GF20
GCP	GROMMET CAP (PLUGGED)	BLACK	SPS/NYLON GF20
PLR	PLR	NATURAL	SPS/NYLON GF20
M-R	MAT SEAL	RUST RED	INHERENTLY LUBRICATED SILICONE
M-B	MAT SEAL	ROYAL BLUE	INHERENTLY LUBRICATED SILICONE

FOR ADDITIONAL INFORMATION SEE SD-33482-0001

ASSEMBLY DESCRIPTION	ASSEMBLY PART NUMBER	COMPONENT				BLOCKED TERMINALS								STATUS	COMMENT	OPTIONAL ATTACHMENTS SOLD SEPARATELY			
		THE PRESENCE OF AN ABBREVIATION INDICATES THE PRESENCE OF THAT COMPONENT				CAVITY WITH A NUMBER INDICATES BLOCKED TERMINAL POSITION CAVITY WITHOUT A NUMBER INDICATES OPEN TERMINAL POSITION													
		HOUSING KEY/COLOR	GROMMET CAP	PLR	MAT SEAL											BACKSHELL WITH RIBS	BACKSHELL WITHOUT RIBS	90° ADAPTOR WITH RIBS	90° ADAPTOR WITHOUT RIBS
MX150 ASSY BLD 2X8 BK A/16	334821601	A-BLACK	GCP	PLR	M-R	-	-	-	-	-	-	-	-	OBSOLETE	SEE PN 334828601	34950-1611	34950-1621	34951-1631	34951-1641
						-	-	-	-	-	-	-	-						
MX150 ASSY BLD 2X8 LG B/16	334821602	B-LIGHT GRAY	GCP	PLR	M-R	-	-	-	-	-	-	-	-	OBSOLETE	SEE PN 334828602	34950-1611	34950-1621	34951-1631	34951-1641
						-	-	-	-	-	-	-	-						
MX150 ASSY BLD 2X8 BR C/16	334821603	C-BROWN	GCP	PLR	M-R	-	-	-	-	-	-	-	-	OBSOLETE	SEE PN 334828725	34950-1611	34950-1621	34951-1631	34951-1641
						-	-	-	-	-	-	-	-						
MX150 ASSY BLD 2X8 GR D/16	334821604	D-GREEN	GCP	PLR	M-R	-	-	-	-	-	-	-	-	OBSOLETE	SEE PN 334828726	34950-1611	34950-1621	34951-1631	34951-1641
						-	-	-	-	-	-	-	-						
MX150 ASSY BLD 2X8 BK A/15	334821606	A-BLACK	GCP	PLR	M-R	-	-	-	-	-	-	-	8	OBSOLETE	SEE PN 334828606	34950-1611	34950-1621	34951-1631	34951-1641
						-	-	-	-	-	-	-	-						
MX150 ASSY BLD 2X8 LG B/15	334821607	B-LIGHT GRAY	GCP	PLR	M-R	-	-	-	-	-	-	-	8	OBSOLETE	SEE PN 334828607	34950-1611	34950-1621	34951-1631	34951-1641
						-	-	-	-	-	-	-	-						
MX150 ASSY BLD 2X8 BR C/15	334821608	C-BROWN	GCP	PLR	M-R	-	-	-	-	-	-	-	8	OBSOLETE	SEE PN 334828751	34950-1611	34950-1621	34951-1631	34951-1641
						-	-	-	-	-	-	-	-						
MX150 ASSY BLD 2X8 GR D/15	334821609	D-GREEN	GCP	PLR	M-R	-	-	-	-	-	-	-	8	OBSOLETE	SEE PN 334828752	34950-1611	34950-1621	34951-1631	34951-1641
						-	-	-	-	-	-	-	-						
MX150 ASSY BLD 2X8 BK A/14	334821611	A-BLACK	GCP	PLR	M-R	-	-	-	-	-	-	-	8	OBSOLETE	SEE PN 334828611	34950-1611	34950-1621	34951-1631	34951-1641
						9	-	-	-	-	-	-	-						
MX150 ASSY BLD 2X8 LG B/14	334821612	B-LIGHT GRAY	GCP	PLR	M-R	-	-	-	-	-	-	-	8	OBSOLETE	SEE PN 334828612	34950-1611	34950-1621	34951-1631	34951-1641
						9	-	-	-	-	-	-	-						
MX150 ASSY BLD 2X8 BR C/14	334821613	C-BROWN	GCP	PLR	M-R	-	-	-	-	-	-	-	8	OBSOLETE	SEE PN 334828753	34950-1611	34950-1621	34951-1631	34951-1641
						9	-	-	-	-	-	-	-						
MX150 ASSY BLD 2X8 GR D/14	334821614	D-GREEN	GCP	PLR	M-R	-	-	-	-	-	-	-	8	OBSOLETE	SEE PN 334828754	34950-1611	34950-1621	34951-1631	34951-1641
						9	-	-	-	-	-	-	-						
MX150 ASSY BLD 2X8 BK A/13	334821616	A-BLACK	GCP	PLR	M-R	1	-	-	-	-	-	-	8	OBSOLETE	SEE PN 334828616	34950-1611	34950-1621	34951-1631	34951-1641
						9	-	-	-	-	-	-	-						
MX150 ASSY BLD 2X8 LG B/13	334821617	B-LIGHT GRAY	GCP	PLR	M-R	1	-	-	-	-	-	-	8	OBSOLETE	SEE PN 334828617	34950-1611	34950-1621	34951-1631	34951-1641
						9	-	-	-	-	-	-	-						
MX150 ASSY BLD 2X8 BR C/13	334821618	C-BROWN	GCP	PLR	M-R	1	-	-	-	-	-	-	8	OBSOLETE	SEE PN 334828755	34950-1611	34950-1621	34951-1631	34951-1641
						9	-	-	-	-	-	-	-						
MX150 ASSY BLD 2X8 GR D/13	334821619	D-GREEN	GCP	PLR	M-R	1	-	-	-	-	-	-	8	OBSOLETE	SEE PN 334828756	34950-1611	34950-1621	34951-1631	34951-1641
						9	-	-	-	-	-	-	-						
MX150 ASSY BLD 2X8 BK A/0	334821621	A-BLACK	GCP	PLR	M-R	1	2	3	4	5	6	7	8	OBSOLETE	SEE PN 334828621	34950-1611	34950-1621	34951-1631	34951-1641
						9	10	11	12	13	14	15	16						

molex

MX150 2X8 BLADE SEALED ASSEMBLY MAT SEAL
BOM AND PIN OUT SHEET

ASSEMBLY DESCRIPTION	ASSEMBLY PART NUMBER	COMPONENT: THE PRESENCE OF AN ABBREVIATION INDICATES THE PRESENCE OF THAT COMPONENT				BLOCKED TERMINALS: CAVITY WITH A NUMBER INDICATES BLOCKED TERMINAL POSITION, CAVITY WITHOUT A NUMBER INDICATES OPEN TERMINAL POSITION								STATUS	COMMENT	OPTIONAL ATTACHMENTS SOLD SEPARATELY			
		HOUSING KEY/COLOR	GROMMET CAP	PLR	MAT SEAL											BACKSHELL WITH RIBS	BACKSHELL WITHOUT RIBS	90^0 ADAPTOR WITH RIBS	90^0 ADAPTOR WITHOUT RIBS
MX150 ASSY BLD 2X8 LG B/0	334821622	B-LIGHT GRAY	GCP	PLR	M-R	1	2	3	4	5	6	7	8	OBSOLETE	SEE PN 334828622	34950-1611	34950-1621	34951-1631	34951-1641
						9	10	11	12	13	14	15	16						
MX150 ASSY BLD 2X8 BR C/0	334821623	C-BROWN	GCP	PLR	M-R	1	2	3	4	5	6	7	8	OBSOLETE	SEE PN 334828727	34950-1611	34950-1621	34951-1631	34951-1641
						9	10	11	12	13	14	15	16						
MX150 ASSY BLD 2X8 GR D/0	334821624	D-GREEN	GCP	PLR	M-R	1	2	3	4	5	6	7	8	OBSOLETE	SEE PN 334828728	34950-1611	34950-1621	34951-1631	34951-1641
						9	10	11	12	13	14	15	16						
MX150 ASSY BLD 2X8 BK A/15	334821626	A-BLACK	GCP	PLR	M-R	-	-	-	-	-	-	-	-	OBSOLETE	SEE PN 334828626	34950-1611	34950-1621	34951-1631	34951-1641
						-	-	-	-	-	-	15	-						
MX150 ASSY BLD 2X8 BK A/12	334821627	A-BLACK	GCP	PLR	M-R	1	-	-	-	-	-	-	8	OBSOLETE	SEE PN 334828627	34950-1611	34950-1621	34951-1631	34951-1641
						9	-	-	-	-	-	-	16						
MX150 ASSY BLD 2X8 LG B/12	334821628	B-LIGHT GRAY	GCP	PLR	M-R	1	-	-	-	-	-	-	8	OBSOLETE	SEE PN 334828628	34950-1611	34950-1621	34951-1631	34951-1641
						9	-	-	-	-	-	-	16						
MX150 ASSY BLD 2X8 BR C/12	334821629	C-BROWN	GCP	PLR	M-R	1	-	-	-	-	-	-	8	OBSOLETE	SEE PN 334828757	34950-1611	34950-1621	34951-1631	34951-1641
						9	-	-	-	-	-	-	16						
MX150 ASSY BLD 2X8 GR D/12	334821630	D-GREEN	GCP	PLR	M-R	1	-	-	-	-	-	-	8	OBSOLETE	SEE PN 334828758	34950-1611	34950-1621	34951-1631	34951-1641
						9	-	-	-	-	-	-	16						
MX150 ASSY BLD 2X8 BK A/10	334821632	A-BLACK	GCP	PLR	M-R	-	-	-	4	-	-	7	8	OBSOLETE	SEE PN 334828632	34950-1611	34950-1621	34951-1631	34951-1641
						-	-	-	12	13	14	-	-						
MX150 ASSY BLD 2X8 BK A/6	334821633	A-BLACK	GCP	PLR	M-R	-	-	3	4	5	-	-	-	OBSOLETE	SEE PN 334828633	34950-1611	34950-1621	34951-1631	34951-1641
						-	10	11	12	13	14	15	16						
MX150 ASSY BLD 2X8 BK A/11	334821634	A-BLACK	GCP	PLR	M-R	-	-	-	-	-	-	7	8	OBSOLETE	SEE PN 334828634	34950-1611	34950-1621	34951-1631	34951-1641
						-	-	-	12	13	14	-	-						
MX150 ASSY BLD 2X8 LG B/11	334821635	B-LIGHT GRAY	GCP	PLR	M-R	-	-	-	-	-	-	-	8	OBSOLETE	SEE PN 334828635	34950-1611	34950-1621	34951-1631	34951-1641
						-	-	-	-	13	14	15	16						
MX150 ASSY BLD 2X8 BK A/10	334821636	A-BLACK	GCP	PLR	M-R	-	-	-	-	-	-	-	-	OBSOLETE	SEE PN 334828636	34950-1611	34950-1621	34951-1631	34951-1641
						-	10	11	-	13	14	15	16						
MX150 ASSY BLD 2X8 BK A/12	334821637	A-BLACK	GCP	PLR	M-R	-	-	-	-	-	-	-	-	OBSOLETE	SEE PN 334828637	34950-1611	34950-1621	34951-1631	34951-1641
						-	10	11	-	-	-	15	16						
MX150 ASSY BLD 2X8 BK A/9	334821638	A-BLACK	GCP	PLR	M-R	-	-	-	-	-	-	-	8	OBSOLETE	SEE PN 334828638	34950-1611	34950-1621	34951-1631	34951-1641
						9	10	11	12	-	-	15	16						
MX150 ASSY BLD 2X8 BK A/15	334821639	A-BLACK	GCP	PLR	M-R	-	-	-	-	-	-	-	-	OBSOLETE	SEE PN 334828626	34950-1611	34950-1621	34951-1631	34951-1641
						-	-	-	-	-	-	15	-						
MX150 ASSY BLD 2X8 BK A/14	334821640	A-BLACK	GCP	PLR	M-R	-	-	-	-	5	-	-	-	OBSOLETE	SEE PN 334828640	34950-1611	34950-1621	34951-1631	34951-1641
						-	-	-	-	-	-	-	16						
MX150 ASSY BLD 2X8 BK A/15	334821641	A-BLACK	GCP	PLR	M-R	-	-	-	-	5	-	-	-	OBSOLETE	SEE PN 334828641	34950-1611	34950-1621	34951-1631	34951-1641
						-	-	-	-	-	-	-	-						
MX150 ASSY BLD 2X8 LG B/10	334821642	B-LIGHT GRAY	GCP	PLR	M-R	-	-	-	4	-	6	7	8	OBSOLETE	SEE PN 334828642	34950-1611	34950-1621	34951-1631	34951-1641
						-	-	-	12	-	14	-	-						
MX150 ASSY BLD 2X8 BK A/14	334821643	A-BLACK	GCP	PLR	M-R	-	-	-	-	-	-	-	-	OBSOLETE	SEE PN 334828643	34950-1611	34950-1621	34951-1631	34951-1641
						-	-	-	-	-	-	15	16						
MX150 ASSY BLD 2X8 LG B/15	334821644	B-LIGHT GRAY	GCP	PLR	M-R	-	-	-	4	-	-	-	-	OBSOLETE	SEE PN 334828644	34950-1611	34950-1621	34951-1631	34951-1641
						-	-	-	-	-	-	-	-						
MX150 ASSY BLD 2X8 LG B/12	334821645	B-LIGHT GRAY	GCP	PLR	M-R	-	-	-	4	-	6	7	8	OBSOLETE	SEE PN 334828645	34950-1611	34950-1621	34951-1631	34951-1641
						-	-	-	-	-	-	-	-						
MX150 ASSY BLD 2X8 BK A/11	334821646	A-BLACK	GCP	PLR	M-R	-	-	-	4	-	6	7	8	OBSOLETE	SEE PN 334828646	34950-1611	34950-1621	34951-1631	34951-1641
						-	-	-	12	-	-	-	-						
MX150 ASSY BLD 2X8 BK A/15	334821647	A-BLACK	GCP	PLR	M-R	-	-	-	-	-	-	-	-	OBSOLETE	SEE PN 334828647	34950-1611	34950-1621	34951-1631	34951-1641
						-	-	-	-	-	-	-	16						
MX150 ASSY BLD 2X8 BK A/14	334821648	A-BLACK	GCP	PLR	M-R	-	-	-	4	-	-	-	-	OBSOLETE	SEE PN 334828648	34950-1611	34950-1621	34951-1631	34951-1641
						-	-	-	12	-	-	-	-						
MX150 ASSY BLD 2X8 LG B/15	334821649	B-LIGHT GRAY	GCP	PLR	M-R	-	-	-	-	-	-	-	-	OBSOLETE	SEE PN 334828649	34950-1611	34950-1621	34951-1631	34951-1641
						-	-	-	-	-	-	-	16						
MX150 ASSY BLD 2X8 LG B/13	334821650	B-LIGHT GRAY	GCP	PLR	M-R	-	-	-	4	-	-	-	-	OBSOLETE	SEE PN 334828650	34950-1611	34950-1621	34951-1631	34951-1641
						-	-	-	12	-	14	-	-						

molex

MX150 2X8 BLADE SEALED ASSEMBLY MAT SEAL
BOM AND PIN OUT SHEET

ASSEMBLY DESCRIPTION	ASSEMBLY PART NUMBER	COMPONENT: THE PRESENCE OF AN ABBREVIATION INDICATES THE PRESENCE OF THAT COMPONENT				BLOCKED TERMINALS: CAVITY WITH A NUMBER INDICATES BLOCKED TERMINAL POSITION, CAVITY WITHOUT A NUMBER INDICATES OPEN TERMINAL POSITION								STATUS	COMMENT	OPTIONAL ATTACHMENTS SOLD SEPARATELY			
		HOUSING KEY/COLOR	GROMMET CAP	PLR	MAT SEAL											BACKSHELL WITH RIBS	BACKSHELL WITHOUT RIBS	90^0 ADAPTOR WITH RIBS	90^0 ADAPTOR WITHOUT RIBS
MX150 ASSY BLD 2X8 LG B/15	334821651	B-LIGHT GRAY	GCP	PLR	M-R	-	-	-	-	-	-	-	-	OBSOLETE	SEE PN 334828651	34950-1611	34950-1621	34951-1631	34951-1641
						-	-	-	-	-	14	-	-						
MX150 ASSY BLD 2X8 LG B/12	334821652	B-LIGHT GRAY	GCP	PLR	M-R	-	-	-	-	-	6	7	8	OBSOLETE	SEE PN 334828652	34950-1611	34950-1621	34951-1631	34951-1641
						-	-	-	-	-	14	-	-						
MX150 ASSY BLD 2X8 BK A/14	334821653	A-BLACK	GCP	PLR	M-R	-	-	-	-	-	-	-	-	OBSOLETE	SEE PN 334828653	34950-1611	34950-1621	34951-1631	34951-1641
						9	-	-	-	-	-	15	-						
MX150 ASSY BLD 2X8 BK A/13	334821654	A-BLACK	GCP	PLR	M-R	-	-	-	4	-	-	-	8	OBSOLETE	SEE PN 334828654	34950-1611	34950-1621	34951-1631	34951-1641
						-	-	-	12	-	-	-	-						
MX150 ASSY BLD 2X8 LG B/12	334821655	B-LIGHT GRAY	GCP	PLR	M-R	-	-	-	4	-	-	-	8	OBSOLETE	SEE PN 334828655	34950-1611	34950-1621	34951-1631	34951-1641
						-	-	-	12	-	14	-	-						
MX150 ASSY BLD 2X8 LG B/14	334821656	B-LIGHT GRAY	GCP	PLR	M-R	-	-	-	-	-	-	-	8	OBSOLETE	SEE PN 334828656	34950-1611	34950-1621	34951-1631	34951-1641
						-	-	-	-	-	14	-	-						
MX150 ASSY BLD 2X8 BK A/14	334821657	A-BLACK	GCP	PLR	M-R	1	-	-	-	-	-	7	-	OBSOLETE	SEE PN 334828657	34950-1611	34950-1621	34951-1631	34951-1641
						-	-	-	-	-	-	-	-						
MX150 ASSY BLD 2X8 LG B/9	334821658	B-LIGHT GRAY	GCP	PLR	M-R	-	2	-	4	-	6	7	8	OBSOLETE	SEE PN 334828658	34950-1611	34950-1621	34951-1631	34951-1641
						-	-	-	12	-	14	-	-						
MX150 ASSY BLD 2X8 LG B/11	334821659	B-LIGHT GRAY	GCP	PLR	M-R	-	2	-	-	-	6	7	8	OBSOLETE	SEE PN 334828659	34950-1611	34950-1621	34951-1631	34951-1641
						-	-	-	-	-	14	-	-						
MX150 ASSY BLD 2X8 LG B/13	334821660	B-LIGHT GRAY	GCP	PLR	M-R	-	2	-	-	-	-	-	8	OBSOLETE	SEE PN 334828660	34950-1611	34950-1621	34951-1631	34951-1641
						-	-	-	-	-	14	-	-						
MX150 ASSY BLD 2X8 BK A/12	334821661	A-BLACK	GCP	PLR	M-R	-	2	-	4	-	-	-	8	OBSOLETE	SEE PN 334828661	34950-1611	34950-1621	34951-1631	34951-1641
						-	-	-	12	-	-	-	-						
MX150 ASSY BLD 2X8 LG B/11	334821662	B-LIGHT GRAY	GCP	PLR	M-R	-	2	-	4	-	-	-	8	OBSOLETE	SEE PN 334828662	34950-1611	34950-1621	34951-1631	34951-1641
						-	-	-	12	-	14	-	-						
MX150 ASSY BLD 2X8 BK A/14	334821663	A-BLACK	GCP	PLR	M-R	-	2	-	-	-	-	-	8	OBSOLETE	SEE PN 334828663	34950-1611	34950-1621	34951-1631	34951-1641
						-	-	-	-	-	-	-	-						
MX150 ASSY BLD 2X8 BK A/10	334821664	A-BLACK	GCP	PLR	M-R	-	-	3	-	-	-	-	8	OBSOLETE	SEE PN 334828664	34950-1611	34950-1621	34951-1631	34951-1641
						-	10	11	-	-	-	15	16						
MX150 ASSY BLD 2X8 BK A/6	334821665	A-BLACK	GCP	PLR	M-R	-	-	3	4	5	6	7	8	OBSOLETE	SEE PN 334828665	34950-1611	34950-1621	34951-1631	34951-1641
						-	10	11	-	-	-	15	16						
MX150 ASSY BLD 2X8 BK A/7	334821666	A-BLACK	GCP	PLR	M-R	-	2	-	-	-	6	7	8	OBSOLETE	SEE PN 334828666	34950-1611	34950-1621	34951-1631	34951-1641
						-	10	-	-	13	14	15	16						
MX150 ASSY BLD 2X8 BK A/8	334821667	A-BLACK	GCP	PLR	M-R	-	2	-	-	5	6	-	-	OBSOLETE	SEE PN 334828667	34950-1611	34950-1621	34951-1631	34951-1641
						-	10	-	-	13	14	15	16						
MX150 ASSY BLD 2X8 BK A/7	334821668	A-BLACK	GCP	PLR	M-R	-	2	-	-	5	6	-	-	OBSOLETE	SEE PN 334828668	34950-1611	34950-1621	34951-1631	34951-1641
						-	10	11	-	13	14	15	16						
MX150 ASSY BLD 2X8 BK A/11	334821669	A-BLACK	GCP	PLR	M-R	-	2	-	-	-	6	-	-	OBSOLETE	SEE PN 334828669	34950-1611	34950-1621	34951-1631	34951-1641
						-	10	-	-	13	14	-	-						
MX150 ASSY BLD 2X8 BK A/5	334821670	A-BLACK	GCP	PLR	M-R	-	2	-	4	5	6	7	8	OBSOLETE	SEE PN 334828670	34950-1611	34950-1621	34951-1631	34951-1641
						-	10	11	12	13	14	-	-						
MX150 ASSY BLD 2X8 BK A/8	334821671	A-BLACK	GCP	PLR	M-R	-	2	-	4	5	6	-	-	OBSOLETE	SEE PN 334828671	34950-1611	34950-1621	34951-1631	34951-1641
						-	10	-	12	13	14	-	-						
MX150 ASSY BLD 2X8 BK A/14	334821672	A-BLACK	GCP	PLR	M-R	-	-	-	4	-	-	-	8	OBSOLETE	SEE PN 334828672	34950-1611	34950-1621	34951-1631	34951-1641
						-	-	-	-	-	-	-	-						
MX150 ASSY BLD 2X8 BK A/12	334821673	A-BLACK	GCP	PLR	M-R	-	2	-	-	-	6	7	8	OBSOLETE	SEE PN 334828673	34950-1611	34950-1621	34951-1631	34951-1641
						-	-	-	-	-	-	-	-						
MX150 ASSY BLD 2X8 BK A/13	334821674	A-BLACK	GCP	PLR	M-R	-	2	-	-	5	6	-	-	OBSOLETE	SEE PN 334828674	34950-1611	34950-1621	34951-1631	34951-1641
						-	-	-	-	-	-	-	-						
MX150 ASSY BLD 2X8 BK A/12	334821675	A-BLACK	GCP	PLR	M-R	-	2	-	-	5	6	-	-	OBSOLETE	SEE PN 334828675	34950-1611	34950-1621	34951-1631	34951-1641
						-	-	11	-	-	-	-	-						
MX150 ASSY BLD 2X8 BK A/11	334821676	A-BLACK	GCP	PLR	M-R	-	-	-	-	5	6	7	8	OBSOLETE	SEE PN 334828676	34950-1611	34950-1621	34951-1631	34951-1641
						-	-	-	-	13	-	-	-						
MX150 ASSY BLD 2X8 BK A/10	334821677	A-BLACK	GCP	PLR	M-R	-	-	-	-	5	6	7	8	OBSOLETE	SEE PN 334828677	34950-1611	34950-1621	34951-1631	34951-1641
						-	-	11	-	13	-	-	-						

molex

MX150 2X8 BLADE SEALED ASSEMBLY MAT SEAL
BOM AND PIN OUT SHEET

ASSEMBLY DESCRIPTION	ASSEMBLY PART NUMBER	COMPONENT: THE PRESENCE OF AN ABBREVIATION INDICATES THE PRESENCE OF THAT COMPONENT				BLOCKED TERMINALS: CAVITY WITH A NUMBER INDICATES BLOCKED TERMINAL POSITION, CAVITY WITHOUT A NUMBER INDICATES OPEN TERMINAL POSITION								STATUS	COMMENT	OPTIONAL ATTACHMENTS SOLD SEPARATELY			
		HOUSING KEY/COLOR	GROMMET CAP	PLR	MAT SEAL											BACKSHELL WITH RIBS	BACKSHELL WITHOUT RIBS	90° ADAPTOR WITH RIBS	90° ADAPTOR WITHOUT RIBS
MX150 ASSY BLD 2X8 BK A/9	334821678	A-BLACK	GCP	PLR	M-R	-	-	-	-	5	6	7	8	OBSOLETE	SEE PN 334828678	34950-1611	34950-1621	34951-1631	34951-1641
						-	-	-	12	13	14	-	-						
MX150 ASSY BLD 2X8 BK A/8	334821679	A-BLACK	GCP	PLR	M-R	-	-	-	-	5	6	7	8	OBSOLETE	SEE PN 334828679	34950-1611	34950-1621	34951-1631	34951-1641
						-	-	11	12	13	14	-	-						
MX150 ASSY BLD 2X8 BK A/7	334821680	A-BLACK	GCP	PLR	M-R	-	-	-	-	5	6	7	8	OBSOLETE	SEE PN 334828680	34950-1611	34950-1621	34951-1631	34951-1641
						-	-	11	12	13	14	15	-						
MX150 ASSY BLD 2X8 BK A/14	334821681	A-BLACK	GCP	PLR	M-R	-	-	-	-	-	-	7	-	OBSOLETE	SEE PN 334828681	34950-1611	34950-1621	34951-1631	34951-1641
						-	-	-	-	-	-	15	-						
MX150 ASSY BLD 2X8 BK A/11	334821682	A-BLACK	GCP	PLR	M-R	-	-	-	4	5	6	-	-	OBSOLETE	SEE PN 334828682	34950-1611	34950-1621	34951-1631	34951-1641
						-	-	-	-	-	-	15	16						
MX150 ASSY BLD 2X8 BK A/10	334821683	A-BLACK	GCP	PLR	M-R	-	-	3	4	5	6	-	-	OBSOLETE	SEE PN 334828683	34950-1611	34950-1621	34951-1631	34951-1641
						-	-	-	-	-	-	15	16						
MX150 ASSY BLD 2X8 BK A/6	334821684	A-BLACK	GCP	PLR	M-R	1	2	3	4	5	6	-	8	OBSOLETE	SEE PN 334828684	34950-1611	34950-1621	34951-1631	34951-1641
						-	-	-	-	13	-	15	16						
MX150 ASSY BLD 2X8 BK A/12	334821685	A-BLACK	GCP	PLR	M-R	-	-	-	-	-	-	-	-	OBSOLETE	SEE PN 334828685	34950-1611	34950-1621	34951-1631	34951-1641
						-	-	-	-	13	14	15	16						
MX150 ASSY BLD 2X8 BK A/11	334821686	A-BLACK	GCP	PLR	M-R	-	-	-	-	-	-	-	8	OBSOLETE	SEE PN 334828686	34950-1611	34950-1621	34951-1631	34951-1641
						-	-	-	-	13	14	15	16						
MX150 ASSY BLD 2X8 BK A/9	334821687	A-BLACK	GCP	PLR	M-R	-	-	-	-	-	-	7	8	OBSOLETE	SEE PN 334828687	34950-1611	34950-1621	34951-1631	34951-1641
						-	-	11	12	13	14	15	-						
MX150 ASSY BLD 2X8 BK A/10	334821688	A-BLACK	GCP	PLR	M-R	-	-	-	-	-	-	7	8	OBSOLETE	SEE PN 334828688	34950-1611	34950-1621	34951-1631	34951-1641
						-	-	-	12	13	14	15	-						
MX150 ASSY BLD 2X8 BK A/12	334821689	A-BLACK	GCP	PLR	M-R	-	-	-	-	-	-	7	8	OBSOLETE	SEE PN 334828689	34950-1611	34950-1621	34951-1631	34951-1641
						-	-	11	-	13	-	-	-						
MX150 ASSY BLD 2X8 BK A/13	334821690	A-BLACK	GCP	PLR	M-R	-	-	-	-	-	-	7	8	OBSOLETE	SEE PN 334828690	34950-1611	34950-1621	34951-1631	34951-1641
						-	-	-	-	13	-	-	-						
MX150 ASSY BLD 2X8 BK A/14	334821691	A-BLACK	GCP	PLR	M-R	-	-	-	-	5	-	-	-	OBSOLETE	SEE PN 334828691	34950-1611	34950-1621	34951-1631	34951-1641
						-	-	-	-	13	-	-	-						
MX150 ASSY BLD 2X8 BK A/11	334821692	A-BLACK	GCP	PLR	M-R	-	2	-	-	-	-	-	-	OBSOLETE	SEE PN 334828692	34950-1611	34950-1621	34951-1631	34951-1641
						9	10	-	-	-	-	15	16						
MX150 ASSY BLD 2X8 BK A/13	334821693	A-BLACK	GCP	PLR	M-R	-	2	-	-	-	-	-	-	OBSOLETE	SEE PN 334828693	34950-1611	34950-1621	34951-1631	34951-1641
						-	10	-	-	-	-	15	-						
MX150 ASSY BLD 2X8 BK A/5	334821694	A-BLACK	GCP	PLR	M-R	-	2	-	-	5	6	7	8	OBSOLETE	SEE PN 334828694	34950-1611	34950-1621	34951-1631	34951-1641
						9	10	-	12	-	14	15	16						
MX150 ASSY BLD 2X8 BK A/7	334821695	A-BLACK	GCP	PLR	M-R	-	2	-	-	5	6	7	8	OBSOLETE	SEE PN 334828695	34950-1611	34950-1621	34951-1631	34951-1641
						-	10	-	12	-	14	15	-						
MX150 ASSY BLD 2X8 BK A/3	334821700	A-BLACK	GCP	PLR	M-R	1	2	3	4	5	6	-	-	OBSOLETE	SEE PN 334828700	34950-1611	34950-1621	34951-1631	34951-1641
						-	10	11	12	13	14	15	16						
MX150 ASSY BLD 2X8 BK A/4	334821701	A-BLACK	GCP	PLR	M-R	1	2	3	4	5	6	-	-	OBSOLETE	SEE PN 334828701	34950-1611	34950-1621	34951-1631	34951-1641
						-	-	11	12	13	14	15	16						
MX150 ASSY BLD 2X8 BK A/6	334821702	A-BLACK	GCP	PLR	M-R	-	-	-	-	-	-	7	8	OBSOLETE	SEE PN 334828702	34950-1611	34950-1621	34951-1631	34951-1641
						9	10	11	12	13	14	15	16						
MX150 ASSY BLD 2X8 BK A/7	334821703	A-BLACK	GCP	PLR	M-R	-	-	-	-	-	-	-	8	OBSOLETE	SEE PN 334828703	34950-1611	34950-1621	34951-1631	34951-1641
						9	10	11	12	13	14	15	16						
MX150 ASSY BLD 2X8 BK A/7	334821704	A-BLACK	GCP	PLR	M-R	1	2	3	4	5	6	-	-	OBSOLETE	SEE PN 334828704	34950-1611	34950-1621	34951-1631	34951-1641
						-	-	-	-	-	14	15	16						
MX150 ASSY BLD 2X8 BK A/9	334821705	A-BLACK	GCP	PLR	M-R	-	-	-	-	-	-	-	-	OBSOLETE	SEE PN 334828705	34950-1611	34950-1621	34951-1631	34951-1641
						-	10	11	12	13	14	15	16						
MX150 ASSY BLD 2X8 BK A/10	334821706	A-BLACK	GCP	PLR	M-R	-	-	-	-	-	-	-	-	OBSOLETE	SEE PN 334828706	34950-1611	34950-1621	34951-1631	34951-1641
						-	-	11	12	13	14	15	16						
MX150 ASSY BLD 2X8 BK A/12	334821707	A-BLACK	GCP	PLR	M-R	-	-	-	-	-	-	7	8	OBSOLETE	SEE PN 334828707	34950-1611	34950-1621	34951-1631	34951-1641
						9	10	-	-	-	-	-	-						
MX150 ASSY BLD 2X8 BK A/13	334821708	A-BLACK	GCP	PLR	M-R	-	-	-	-	-	-	-	-	OBSOLETE	SEE PN 334828708	34950-1611	34950-1621	34951-1631	34951-1641
						-	-	-	-	-	14	15	16						

molex

MX150 2X8 BLADE SEALED ASSEMBLY MAT SEAL
BOM AND PIN OUT SHEET

ASSEMBLY DESCRIPTION	ASSEMBLY PART NUMBER	COMPONENT: THE PRESENCE OF AN ABBREVIATION INDICATES THE PRESENCE OF THAT COMPONENT				BLOCKED TERMINALS: CAVITY WITH A NUMBER INDICATES BLOCKED TERMINAL POSITION, CAVITY WITHOUT A NUMBER INDICATES OPEN TERMINAL POSITION								STATUS	COMMENT	OPTIONAL ATTACHMENTS SOLD SEPARATELY			
		HOUSING KEY/COLOR	GROMMET CAP	PLR	MAT SEAL											BACKSHELL WITH RIBS	BACKSHELL WITHOUT RIBS	90^0 ADAPTOR WITH RIBS	90^0 ADAPTOR WITHOUT RIBS
MX150 ASSY BLD 2X8 BK A/11	334821709	A-BLACK	GCP	PLR	M-R	-	-	-	-	-	-	-	-	OBSOLETE	SEE PN 334828709	34950-1611	34950-1621	34951-1631	34951-1641
						-	-	-	12	13	14	15	16						
MX150 ASSY BLD 2X8 BK A/6	334821710	A-BLACK	GCP	PLR	M-R	1	2	3	4	5	6	7	8	OBSOLETE	SEE PN 334828710	34950-1611	34950-1621	34951-1631	34951-1641
						9	10	-	-	-	-	-	-						
MX150 ASSY BLD 2X8 LG B/2	334821711	B-LIGHT GRAY	GCP	PLR	M-R	1	2	3	4	5	6	7	8	OBSOLETE	SEE PN 334828711	34950-1611	34950-1621	34951-1631	34951-1641
						9	10	-	12	-	14	15	16						
MX150 ASSY BLD 2X8 LG B/4	334821712	B-LIGHT GRAY	GCP	PLR	M-R	1	2	3	4	-	6	7	8	OBSOLETE	SEE PN 334828712	34950-1611	34950-1621	34951-1631	34951-1641
						9	10	-	12	-	14	15	-						
MX150 ASSY BLD 2X8 BK A/9	334821713	A-BLACK	GCP	PLR	M-R	-	2	3	4	-	-	-	-	OBSOLETE	SEE PN 334828713	34950-1611	34950-1621	34951-1631	34951-1641
						9	10	-	-	-	-	15	16						
MX150 ASSY BLD 2X8 BK A/3	334821714	A-BLACK	GCP	PLR	M-R	-	2	3	4	5	6	7	8	OBSOLETE	SEE PN 334828714	34950-1611	34950-1621	34951-1631	34951-1641
						9	10	-	12	-	14	15	16						
MX150 ASSY BLD 2X8 BK A/4	334821715	A-BLACK	GCP	PLR	M-R	1	2	3	4	-	-	7	8	OBSOLETE	SEE PN 334828715	34950-1611	34950-1621	34951-1631	34951-1641
						9	10	11	12	-	-	15	16						
MX150 ASSY BLD 2X8 BK A/6	334821716	A-BLACK	GCP	PLR	M-R	1	2	3	4	-	-	-	8	OBSOLETE	SEE PN 334828716	34950-1611	34950-1621	34951-1631	34951-1641
						9	10	11	12	-	-	-	16						
MX150 ASSY BLD 2X8 BK A/4	334821717	A-BLACK	GCP	PLR	M-R	1	2	3	4	5	6	7	8	OBSOLETE	SEE PN 334828717	34950-1611	34950-1621	34951-1631	34951-1641
						-	-	-	-	13	14	15	16						
MX150 ASSY BLD 2X8 BK A/12	334821718	A-BLACK	GCP	PLR	M-R	-	-	-	-	-	-	-	-	OBSOLETE	SEE PN 334828685	34950-1611	34950-1621	34951-1631	34951-1641
						-	-	-	-	13	14	15	16						
MX150 ASSY BLD 2X8 BK A/8	334821719	A-BLACK	GCP	PLR	M-R	1	-	-	-	5	-	7	8	OBSOLETE	SEE PN 334828719	34950-1611	34950-1621	34951-1631	34951-1641
						-	10	11	-	-	14	15	-						
MX150 ASSY BLD 2X8 BK A/14	334821720	A-BLACK	GCP	PLR	M-R	-	-	-	-	-	-	-	-	OBSOLETE	SEE PN 334828720	34950-1611	34950-1621	34951-1631	34951-1641
						-	-	-	12	-	14	-	-						
MX150 ASSY BLD 2X8 LG B/8	334821721	B-LIGHT GRAY	GCP	PLR	M-R	-	-	-	4	-	6	7	8	OBSOLETE	SEE PN 334828721	34950-1611	34950-1621	34951-1631	34951-1641
						-	-	11	12	13	14	-	-						
MX150 ASSY BLD 2X8 LG B/2	334821722	B-LIGHT GRAY	GCP	PLR	M-R	1	2	3	4	-	6	7	8	OBSOLETE	SEE PN 334828722	34950-1611	34950-1621	34951-1631	34951-1641
						9	10	11	12	13	14	15	-						
MX150 ASSY BLD 2X8 BK A/5	334821723	A-BLACK	GCP	PLR	M-R	1	2	3	4	5	6	-	-	OBSOLETE	SEE PN 334828723	34950-1611	34950-1621	34951-1631	34951-1641
						9	-	-	-	13	14	15	16						
MX150 ASSY BLD 2X8 BK A/14	334821724	A-BLACK	GCP	PLR	M-R	-	-	-	-	-	-	-	-	OBSOLETE	SEE PN 334828724	34950-1611	34950-1621	34951-1631	34951-1641
						-	-	-	-	-	14	15	-						
MX150 ASSY BLD 2X8 DG C/16	334821725	C-DARK GRAY	GCP	PLR	M-R	-	-	-	-	-	-	-	-	OBSOLETE	SEE PN 334828725	34950-1611	34950-1621	34951-1631	34951-1641
						-	-	-	-	-	-	-	-						
MX150 ASSY BLD 2X8 SG D/16	334821726	D-STONE GRAY	GCP	PLR	M-R	-	-	-	-	-	-	-	-	OBSOLETE	SEE PN 334828726	34950-1611	34950-1621	34951-1631	34951-1641
						-	-	-	-	-	-	-	-						
MX150 ASSY BLD 2X8 DG C/0	334821727	C-DARK GRAY	GCP	PLR	M-R	1	2	3	4	5	6	7	8	OBSOLETE	SEE PN 334828727	34950-1611	34950-1621	34951-1631	34951-1641
						9	10	11	12	13	14	15	16						
MX150 ASSY BLD 2X8 SG D/0	334821728	D-STONE GRAY	GCP	PLR	M-R	1	2	3	4	5	6	7	8	OBSOLETE	SEE PN 334828728	34950-1611	34950-1621	34951-1631	34951-1641
						9	10	11	12	13	14	15	16						
MX150 ASSY BLD 2X8 BK A/9	334821729	A-BLACK	GCP	PLR	M-R	-	-	-	-	-	-	-	8	OBSOLETE	SEE PN 334828729	34950-1611	34950-1621	34951-1631	34951-1641
						9	-	-	12	13	14	15	16						
MX150 ASSY BLD 2X8 BK A/3	334821730	A-BLACK	GCP	PLR	M-R	-	-	-	4	5	6	7	8	OBSOLETE	SEE PN 334828730	34950-1611	34950-1621	34951-1631	34951-1641
						9	10	11	12	13	14	15	16						
MX150 ASSY BLD 2X8 BK A/8	334821731	A-BLACK	GCP	PLR	M-R	-	-	-	-	-	-	-	-	OBSOLETE	SEE PN 334828731	34950-1611	34950-1621	34951-1631	34951-1641
						9	10	11	12	13	14	15	16						
MX150 ASSY BLD 2X8 LG B/12	334821732	B-LIGHT GRAY	GCP	PLR	M-R	-	-	-	-	-	6	7	8	OBSOLETE	SEE PN 334828732	34950-1611	34950-1621	34951-1631	34951-1641
						-	-	11	-	-	-	-	-						
MX150 ASSY BLD 2X8 LG B/2	334821733	B-LIGHT GRAY	GCP	PLR	M-R	1	2	3	4	5	6	-	-	OBSOLETE	SEE PN 334828733	34950-1611	34950-1621	34951-1631	34951-1641
						9	10	11	12	13	14	15	16						
MX150 ASSY BLD 2X8 LG B/9	334821734	B-LIGHT GRAY	GCP	PLR	M-R	-	-	-	-	-	6	-	-	OBSOLETE	SEE PN 334828734	34950-1611	34950-1621	34951-1631	34951-1641
						9	-	11	12	13	-	15	16						
MX150 ASSY BLD 2X8 BK A/10	334821735	A-BLACK	GCP	PLR	M-R	-	-	-	-	-	6	-	-	OBSOLETE	SEE PN 334828735	34950-1611	34950-1621	34951-1631	34951-1641
						-	10	11	12	13	14	-	-						

molex

MX150 2X8 BLADE SEALED ASSEMBLY MAT SEAL
BOM AND PIN OUT SHEET

ASSEMBLY DESCRIPTION	ASSEMBLY PART NUMBER	COMPONENT				BLOCKED TERMINALS								STATUS	COMMENT	OPTIONAL ATTACHMENTS SOLD SEPARATELY			
		THE PRESENCE OF AN ABBREVIATION INDICATES THE PRESENCE OF THAT COMPONENT				CAVITY WITH A NUMBER INDICATES BLOCKED TERMINAL POSITION CAVITY WITHOUT A NUMBER INDICATES OPEN TERMINAL POSITION													
		HOUSING KEY/COLOR	GROMMET CAP	PLR	MAT SEAL											BACKSHELL WITH RIBS	BACKSHELL WITHOUT RIBS	90° ADAPTOR WITH RIBS	90° ADAPTOR WITHOUT RIBS
MX150 ASSY BLD 2X8 BK A/8	334821736	A-BLACK	GCP	PLR	M-R	1	2	3	4	5	6	-	-	OBSOLETE	SEE PN 334828736	34950-1611	34950-1621	34951-1631	34951-1641
						-	-	-	-	13	14	-	-						
MX150 ASSY BLD 2X8 BK A/5	334821737	A-BLACK	GCP	PLR	M-R	1	2	3	4	5	6	-	-	OBSOLETE	SEE PN 334828737	34950-1611	34950-1621	34951-1631	34951-1641
						-	10	11	12	13	14	-	-						
MX150 ASSY BLD 2X8 BK A/10	334821738	A-BLACK	GCP	PLR	M-R	1	2	-	-	5	6	7	8	OBSOLETE	SEE PN 334828738	34950-1611	34950-1621	34951-1631	34951-1641
						-	-	-	-	-	-	-	-						
MX150 ASSY BLD 2X8 BK A/12	334821739	A-BLACK	GCP	PLR	M-R	-	-	3	4	-	-	-	-	OBSOLETE	SEE PN 334828739	34950-1611	34950-1621	34951-1631	34951-1641
						-	-	11	12	-	-	-	-						
MX150 ASSY BLD 2X8 BK A/11	334821740	A-BLACK	GCP	PLR	M-R	-	-	-	-	-	-	-	-	OBSOLETE	SEE PN 334828740	34950-1611	34950-1621	34951-1631	34951-1641
						9	-	-	-	13	14	15	16						
MX150 ASSY BLD 2X8 BK A/6	334821741	A-BLACK	GCP	PLR	M-R	-	-	3	4	-	-	-	-	OBSOLETE	SEE PN 334828741	34950-1611	34950-1621	34951-1631	34951-1641
						9	10	11	12	13	14	15	16						
MX150 ASSY BLD 2X8 BK A/12	334821742	A-BLACK	GCP	PLR	M-R	-	-	-	-	-	-	-	-	OBSOLETE	SEE PN 334828742	34950-1611	34950-1621	34951-1631	34951-1641
						-	-	11	12	13	14	-	-						
MX150 ASSY BLD 2X8 BK A/14	334821743	A-BLACK	GCP	PLR	M-R	-	-	-	-	-	-	-	-	OBSOLETE	SEE PN 334828743	34950-1611	34950-1621	34951-1631	34951-1641
						-	-	11	-	-	14	-	-						
MX150 ASSY BLD 2X8 BK A/8	334821744	A-BLACK	GCP	PLR	M-R	-	2	-	-	-	-	7	-	OBSOLETE	SEE PN 334828744	34950-1611	34950-1621	34951-1631	34951-1641
						9	-	11	12	13	14	-	16						
MX150 ASSY BLD 2X8 BK A/11	334821745	A-BLACK	GCP	PLR	M-R	-	2	-	-	-	-	-	-	OBSOLETE	SEE PN 334828745	34950-1611	34950-1621	34951-1631	34951-1641
						9	-	-	12	13	14	-	-						
MX150 ASSY BLD 2X8 BK A/14	334821746	A-BLACK	GCP	PLR	M-R	-	2	-	-	-	-	-	-	OBSOLETE	SEE PN 334828746	34950-1611	34950-1621	34951-1631	34951-1641
						9	-	-	-	-	-	-	-						
MX150 ASSY BLD 2X8 BK A/12	334821747	A-BLACK	GCP	PLR	M-R	-	-	-	-	-	-	-	-	OBSOLETE	SEE PN 334828747	34950-1611	34950-1621	34951-1631	34951-1641
						-	-	-	12	13	14	-	16						
MX150 ASSY BLD 2X8 BK A/10	334821748	A-BLACK	GCP	PLR	M-R	-	2	-	-	-	-	-	-	OBSOLETE	SEE PN 334828748	34950-1611	34950-1621	34951-1631	34951-1641
						9	-	-	12	13	14	-	16						
MX150 ASSY BLD 2X8 BK A/9	334821749	A-BLACK	GCP	PLR	M-R	1	-	-	-	-	-	-	-	OBSOLETE	SEE PN 334828749	34950-1611	34950-1621	34951-1631	34951-1641
						-	10	11	12	13	14	-	16						
MX150 ASSY BLD 2X8 BK A/7	334821750	A-BLACK	GCP	PLR	M-R	1	2	-	-	-	-	-	-	OBSOLETE	SEE PN 334828750	34950-1611	34950-1621	34951-1631	34951-1641
						9	10	11	12	13	14	-	16						
MX150 ASSY BLD 2X8 DG C/15	334821751	C-DARK GRAY	GCP	PLR	M-R	-	-	-	-	-	-	-	8	OBSOLETE	SEE PN 334828751	34950-1611	34950-1621	34951-1631	34951-1641
						-	-	-	-	-	-	-	-						
MX150 ASSY BLD 2X8 SG D/15	334821752	D-STONE GRAY	GCP	PLR	M-R	-	-	-	-	-	-	-	8	OBSOLETE	SEE PN 334828752	34950-1611	34950-1621	34951-1631	34951-1641
						-	-	-	-	-	-	-	-						
MX150 ASSY BLD 2X8 DG C/14	334821753	C-DARK GRAY	GCP	PLR	M-R	-	-	-	-	-	-	-	8	OBSOLETE	SEE PN 334828753	34950-1611	34950-1621	34951-1631	34951-1641
						9	-	-	-	-	-	-	-						
MX150 ASSY BLD 2X8 SG D/14	334821754	D-STONE GRAY	GCP	PLR	M-R	-	-	-	-	-	-	-	8	OBSOLETE	SEE PN 334828754	34950-1611	34950-1621	34951-1631	34951-1641
						9	-	-	-	-	-	-	-						
MX150 ASSY BLD 2X8 DG C/13	334821755	C-DARK GRAY	GCP	PLR	M-R	1	-	-	-	-	-	-	8	OBSOLETE	SEE PN 334828755	34950-1611	34950-1621	34951-1631	34951-1641
						9	-	-	-	-	-	-	-						
MX150 ASSY BLD 2X8 SG D/13	334821756	D-STONE GRAY	GCP	PLR	M-R	1	-	-	-	-	-	-	8	OBSOLETE	SEE PN 334828756	34950-1611	34950-1621	34951-1631	34951-1641
						9	-	-	-	-	-	-	-						
MX150 ASSY BLD 2X8 DG C/12	334821757	C-DARK GRAY	GCP	PLR	M-R	1	-	-	-	-	-	-	8	OBSOLETE	SEE PN 334828757	34950-1611	34950-1621	34951-1631	34951-1641
						9	-	-	-	-	-	-	16						
MX150 ASSY BLD 2X8 SG D/12	334821758	D-STONE GRAY	GCP	PLR	M-R	1	-	-	-	-	-	-	8	OBSOLETE	SEE PN 334828758	34950-1611	34950-1621	34951-1631	34951-1641
						9	-	-	-	-	-	-	16						
MX150 ASSY BLD 2X8 BK A/3	334821759	A-BLACK	GCP	PLR	M-R	1	2	3	4	5	-	-	8	OBSOLETE	SEE PN 334828759	34950-1611	34950-1621	34951-1631	34951-1641
						9	10	11	12	13	14	-	16						
MX150 ASSY BLD 2X8 BK A/12	334821760	A-BLACK	GCP	PLR	M-R	-	2	-	-	-	-	7	-	OBSOLETE	SEE PN 334828760	34950-1611	34950-1621	34951-1631	34951-1641
						9	-	-	-	-	-	-	16						
MX150 ASSY BLD 2X8 BK A/13	334821761	A-BLACK	GCP	PLR	M-R	-	2	-	-	5	-	-	-	OBSOLETE	SEE PN 334828761	34950-1611	34950-1621	34951-1631	34951-1641
						9	-	-	-	-	-	-	-						
MX150 ASSY BLD 2X8 BK A/5	334821762	A-BLACK	GCP	PLR	M-R	1	2	-	-	5	-	7	-	OBSOLETE	SEE PN 334828762	34950-1611	34950-1621	34951-1631	34951-1641
						9	10	11	12	13	14	-	16						

molex

MX150 2X8 BLADE SEALED ASSEMBLY MAT SEAL
BOM AND PIN OUT SHEET

ASSEMBLY DESCRIPTION	ASSEMBLY PART NUMBER	COMPONENT: THE PRESENCE OF AN ABBREVIATION INDICATES THE PRESENCE OF THAT COMPONENT				BLOCKED TERMINALS: CAVITY WITH A NUMBER INDICATES BLOCKED TERMINAL POSITION, CAVITY WITHOUT A NUMBER INDICATES OPEN TERMINAL POSITION								STATUS	COMMENT	OPTIONAL ATTACHMENTS SOLD SEPARATELY			
		HOUSING KEY/COLOR	GROMMET CAP	PLR	MAT SEAL											BACKSHELL WITH RIBS	BACKSHELL WITHOUT RIBS	90° ADAPTOR WITH RIBS	90° ADAPTOR WITHOUT RIBS
MX150 ASSY BLD 2X8 BK A/14	334821763	A-BLACK	GCP	PLR	M-R	-	-	-	-	-	-	7	-	OBSOLETE	SEE PN 334828763	34950-1611	34950-1621	34951-1631	34951-1641
						-	-	-	-	-	-	-	16						
MX150 ASSY BLD 2X8 BK A/7	334821764	A-BLACK	GCP	PLR	M-R	-	-	-	-	5	6	7	-	OBSOLETE	SEE PN 334828764	34950-1611	34950-1621	34951-1631	34951-1641
						9	-	11	12	13	14	-	16						
MX150 ASSY BLD 2X8 BK A/8	334821765	A-BLACK	GCP	PLR	M-R	-	2	-	-	5	-	7	-	OBSOLETE	SEE PN 334828765	34950-1611	34950-1621	34951-1631	34951-1641
						9	-	-	12	13	14	-	16						
MX150 ASSY BLD 2X8 BK A/6	334821766	A-BLACK	GCP	PLR	M-R	-	-	-	-	5	6	7	-	OBSOLETE	SEE PN 334828766	34950-1611	34950-1621	34951-1631	34951-1641
						9	10	11	12	13	14	-	16						
MX150 ASSY BLD 2X8 BK A/11	334821767	A-BLACK	GCP	PLR	M-R	-	-	-	-	5	6	7	-	OBSOLETE	SEE PN 334828767	34950-1611	34950-1621	34951-1631	34951-1641
						9	-	-	-	-	-	-	16						
MX150 ASSY BLD 2X8 BK A/10	334821768	A-BLACK	GCP	PLR	M-R	-	-	-	-	5	6	7	-	OBSOLETE	SEE PN 334828768	34950-1611	34950-1621	34951-1631	34951-1641
						9	10	-	-	-	-	-	16						
MX150 ASSY BLD 2X8 BK A/7	334821769	A-BLACK	GCP	PLR	M-R	1	-	-	4	5	6	-	8	OBSOLETE	SEE PN 334828769	34950-1611	34950-1621	34951-1631	34951-1641
						-	-	-	12	13	14	-	16						
MX150 ASSY BLD 2X8 BK A/3	334821770	A-BLACK	GCP	PLR	M-R	1	2	-	4	5	6	-	8	OBSOLETE	SEE PN 334828770	34950-1611	34950-1621	34951-1631	34951-1641
						9	10	-	12	13	14	15	16						
MX150 ASSY BLD 2X8 BK A/7	334821771	A-BLACK	GCP	PLR	M-R	1	-	-	4	-	6	7	8	OBSOLETE	SEE PN 334828771	34950-1611	34950-1621	34951-1631	34951-1641
						-	10	-	-	13	14	15	-						
MX150 ASSY BLD 2X8 BK A/11	334821772	A-BLACK	GCP	PLR	M-R	-	-	-	-	-	-	-	-	OBSOLETE	SEE PN 334828772	34950-1611	34950-1621	34951-1631	34951-1641
						-	10	-	-	13	14	15	16						
MX150 ASSY BLD 2X8 BK A/8	334821773	A-BLACK	GCP	PLR	M-R	1	2	3	4	5	6	-	-	OBSOLETE	SEE PN 334828773	34950-1611	34950-1621	34951-1631	34951-1641
						-	-	11	12	-	-	-	-						
MX150 ASSY BLD 2X8 BK A/14	334821774	A-BLACK	GCP	PLR	M-R	-	-	-	-	-	-	-	-	OBSOLETE	SEE PN 334828774	34950-1611	34950-1621	34951-1631	34951-1641
						-	10	-	-	-	-	15	-						
MX150 ASSY BLD 2X8 BK A/12	334821775	A-BLACK	GCP	PLR	M-R	-	-	-	-	-	-	-	-	OBSOLETE	SEE PN 334828775	34950-1611	34950-1621	34951-1631	34951-1641
						9	10	-	-	-	-	15	16						
MX150 ASSY BLD 2X8 BK A/10	334821776	A-BLACK	GCP	PLR	M-R	-	-	3	4	-	-	-	-	OBSOLETE	SEE PN 334828776	34950-1611	34950-1621	34951-1631	34951-1641
						9	10	-	-	-	-	15	16						
MX150 ASSY BLD 2X8 YW A/16	334821777	A-YELLOW	GCP	PLR	M-R	-	-	-	-	-	-	-	-	OBSOLETE	SEE PN 334828777	34950-1611	34950-1621	34951-1631	34951-1641
						-	-	-	-	-	-	-	-						
MX150 ASSY BLD 2X8 BK A/14	334821778	A-BLACK	GCP	PLR	M-R	-	-	-	-	5	-	-	8	OBSOLETE	SEE PN 334828778	34950-1611	34950-1621	34951-1631	34951-1641
						-	-	-	-	-	-	-	-						
MX150 ASSY BLD 2X8 BK A/8	334821779	A-BLACK	GCP	PLR	M-R	-	-	-	-	5	6	7	8	OBSOLETE	SEE PN 334828779	34950-1611	34950-1621	34951-1631	34951-1641
						9	10	11	12	-	-	-	-						
MX150 ASSY BLD 2X8 BK A/10	334821780	A-BLACK	GCP	PLR	M-R	-	-	3	4	5	6	-	-	OBSOLETE	SEE PN 334828780	34950-1611	34950-1621	34951-1631	34951-1641
						-	-	-	-	13	14	-	-						
MX150 ASSY BLD 2X8 BK A/5	334821781	A-BLACK	GCP	PLR	M-R	1	-	-	4	5	6	7	8	OBSOLETE	SEE PN 334828781	34950-1611	34950-1621	34951-1631	34951-1641
						9	10	-	-	13	14	15	-						
MX150 ASSY BLD 2X8 BK A/5	334821782	A-BLACK	GCP	PLR	M-R	1	-	-	4	-	6	7	8	OBSOLETE	SEE PN 334828782	34950-1611	34950-1621	34951-1631	34951-1641
						-	10	11	12	13	14	15	-						
MX150 ASSY BLD 2X8 BK A/13	334821783	A-BLACK	GCP	PLR	M-R	-	-	-	-	-	-	-	-	OBSOLETE	SEE PN 334828783	34950-1611	34950-1621	34951-1631	34951-1641
						-	-	11	12	-	-	15	-						
MX150 ASSY BLD 2X8 BK A/15	334821784	A-BLACK	GCP	PLR	M-R	-	-	3	-	-	-	-	-	OBSOLETE	SEE PN 334828784	34950-1611	34950-1621	34951-1631	34951-1641
						-	-	-	-	-	-	-	-						
MX150 ASSY BLD 2X8 BK A/7	334821785	A-BLACK	GCP	PLR	M-R	1	-	-	-	5	-	7	-	OBSOLETE	SEE PN 334828785	34950-1611	34950-1621	34951-1631	34951-1641
						-	-	11	12	13	14	15	16						
MX150 ASSY BLD 2X8 BK A/6	334821786	A-BLACK	GCP	PLR	M-R	-	2	-	-	5	-	7	-	OBSOLETE	SEE PN 334828786	34950-1611	34950-1621	34951-1631	34951-1641
						9	-	11	12	13	14	15	16						
MX150 ASSY BLD 2X8 BK A/12	334821787	A-BLACK	GCP	PLR	M-R	1	2	-	-	5	-	-	-	OBSOLETE	SEE PN 334828787	34950-1611	34950-1621	34951-1631	34951-1641
						9	-	-	-	-	-	-	-						
MX150 ASSY BLD 2X8 BK A/6	334821788	A-BLACK	GCP	PLR	M-R	1	2	-	-	-	-	7	-	OBSOLETE	SEE PN 334828788	34950-1611	34950-1621	34951-1631	34951-1641
						9	-	11	12	13	14	15	16						
MX150 ASSY BLD 2X8 BK A/11	334821789	A-BLACK	GCP	PLR	M-R	1	2	-	-	5	-	-	-	OBSOLETE	SEE PN 334828789	34950-1611	34950-1621	34951-1631	34951-1641
						9	-	-	-	-	-	15	-						

molex

MX150 2X8 BLADE SEALED ASSEMBLY MAT SEAL
BOM AND PIN OUT SHEET

ASSEMBLY DESCRIPTION	ASSEMBLY PART NUMBER	COMPONENT: THE PRESENCE OF AN ABBREVIATION INDICATES THE PRESENCE OF THAT COMPONENT				BLOCKED TERMINALS: CAVITY WITH A NUMBER INDICATES BLOCKED TERMINAL POSITION, CAVITY WITHOUT A NUMBER INDICATES OPEN TERMINAL POSITION								STATUS	COMMENT	OPTIONAL ATTACHMENTS SOLD SEPARATELY			
		HOUSING KEY/COLOR	GROMMET CAP	PLR	MAT SEAL											BACKSHELL WITH RIBS	BACKSHELL WITHOUT RIBS	90^0 ADAPTOR WITH RIBS	90^0 ADAPTOR WITHOUT RIBS
MX150 ASSY BLD 2X8 BK A/5	334821790	A-BLACK	GCP	PLR	M-R	1	2	-	-	5	-	7	-	OBSOLETE	SEE PN 334828790	34950-1611	34950-1621	34951-1631	34951-1641
						9	-	11	12	13	14	15	16						
MX150 ASSY BLD 2X8 BK A/13	334821791	A-BLACK	GCP	PLR	M-R	1	2	3	-	-	-	-	-	OBSOLETE	SEE PN 334828791	34950-1611	34950-1621	34951-1631	34951-1641
						-	-	-	-	-	-	-	-						
MX150 ASSY BLD 2X8 BK A/13	334821792	A-BLACK	GCP	PLR	M-R	-	-	-	-	5	-	7	-	OBSOLETE	SEE PN 334828792	34950-1611	34950-1621	34951-1631	34951-1641
						-	-	-	-	-	-	-	16						
MX150 ASSY BLD 2X8 BK A/12	334821793	A-BLACK	GCP	PLR	M-R	-	2	3	-	-	-	-	-	OBSOLETE	SEE PN 334828793	34950-1611	34950-1621	34951-1631	34951-1641
						-	10	11	-	-	-	-	-						
MX150 ASSY BLD 2X8 BK A/9	334821794	A-BLACK	GCP	PLR	M-R	1	2	3	-	5	6	-	-	OBSOLETE	SEE PN 334828794	34950-1611	34950-1621	34951-1631	34951-1641
						-	-	-	12	13	-	-	-						
MX150 ASSY BLD 2X8 BK A/11	334821795	A-BLACK	GCP	PLR	M-R	-	-	3	-	-	-	-	-	OBSOLETE	SEE PN 334828795	34950-1611	34950-1621	34951-1631	34951-1641
						-	10	-	-	13	14	15	-						
MX150 ASSY BLD 2X8 BK A/11	334821796	A-BLACK	GCP	PLR	M-R	-	-	-	-	-	-	7	-	OBSOLETE	SEE PN 334828796	34950-1611	34950-1621	34951-1631	34951-1641
						9	-	-	-	-	14	15	16						
MX150 ASSY BLD 2X8 BK A/13	334821797	A-BLACK	GCP	PLR	M-R	-	-	-	-	-	-	7	8	OBSOLETE	SEE PN 334828797	34950-1611	34950-1621	34951-1631	34951-1641
						-	-	-	12	-	-	-	-						
MX150 ASSY BLD 2X8 BK A/8	334821798	A-BLACK	GCP	PLR	M-R	-	-	3	-	-	-	-	-	OBSOLETE	SEE PN 334828798	34950-1611	34950-1621	34951-1631	34951-1641
						-	10	11	12	13	14	15	16						
MX150 ASSY BLD 2X8 BK A/8	334821799	A-BLACK	GCP	PLR	M-R	-	-	3	4	5	6	7	-	OBSOLETE	SEE PN 334828799	34950-1611	34950-1621	34951-1631	34951-1641
						-	10	-	-	-	-	15	16						
MX150 ASSY BLD 2X8 BK A/11	334821800	A-BLACK	GCP	PLR	M-R	1	2	-	-	5	-	-	-	OBSOLETE	SEE PN 334828800	34950-1611	34950-1621	34951-1631	34951-1641
						-	-	-	-	13	14	-	-						
MX150 ASSY BLD 2X8 BK A/7	334821801	A-BLACK	GCP	PLR	M-R	-	-	-	-	5	-	7	8	OBSOLETE	SEE PN 334828801	34950-1611	34950-1621	34951-1631	34951-1641
						9	10	11	12	13	14	-	-						
MX150 ASSY BLD 2X8 BK A/13	334821802	A-BLACK	GCP	PLR	M-R	-	-	-	-	5	-	-	-	OBSOLETE	SEE PN 334828802	34950-1611	34950-1621	34951-1631	34951-1641
						-	-	-	-	13	14	-	-						
MX150 ASSY BLD 2X8 BK A/13	334821803	A-BLACK	GCP	PLR	M-R	1	2	-	-	5	-	-	-	OBSOLETE	SEE PN 334828803	34950-1611	34950-1621	34951-1631	34951-1641
						-	-	-	-	-	-	-	-						
MX150 ASSY BLD 2X8 BK A/5	334821804	A-BLACK	GCP	PLR	M-R	1	2	-	-	5	-	7	8	OBSOLETE	SEE PN 334828804	34950-1611	34950-1621	34951-1631	34951-1641
						9	10	11	12	13	14	-	-						
MX150 ASSY BLD 2X8 BK A/8	334821805	A-BLACK	GCP	PLR	M-R	-	-	-	-	-	6	-	-	OBSOLETE	SEE PN 334828805	34950-1611	34950-1621	34951-1631	34951-1641
						-	10	11	12	13	14	15	16						
MX150 ASSY BLD 2X8 BK A/11	334821806	A-BLACK	GCP	PLR	M-R	-	-	-	-	-	6	-	-	OBSOLETE	SEE PN 334828806	34950-1611	34950-1621	34951-1631	34951-1641
						-	-	-	-	13	14	15	16						
MX150 ASSY BLD 2X8 BK A/13	334821807	A-BLACK	GCP	PLR	M-R	-	-	-	-	-	6	-	-	OBSOLETE	SEE PN 334828807	34950-1611	34950-1621	34951-1631	34951-1641
						-	-	-	-	13	14	-	-						
MX150 ASSY BLD 2X8 BK A/6	334821808	A-BLACK	GCP	PLR	M-R	1	2	3	4	5	6	-	-	OBSOLETE	SEE PN 334828808	34950-1611	34950-1621	34951-1631	34951-1641
						-	-	-	-	13	14	15	16						
MX150 ASSY BLD 2X8 BK A/13	334821809	A-BLACK	GCP	PLR	M-R	1	-	-	-	-	-	-	8	OBSOLETE	SEE PN 334828809	34950-1611	34950-1621	34951-1631	34951-1641
						-	-	-	-	-	-	15	-						
MX150 ASSY BLD 2X8 BK A/14	334821810	A-BLACK	GCP	PLR	M-R	1	-	-	-	-	-	-	-	OBSOLETE	SEE PN 334828810	34950-1611	34950-1621	34951-1631	34951-1641
						-	-	-	-	-	-	15	-						
MX150 ASSY BLD 2X8 BK A/13	334821811	A-BLACK	GCP	PLR	M-R	-	-	-	-	-	-	-	8	OBSOLETE	SEE PN 334828811	34950-1611	34950-1621	34951-1631	34951-1641
						-	-	-	-	13	-	-	16						
MX150 ASSY BLD 2X8 BK A/11	334821812	A-BLACK	GCP	PLR	M-R	-	-	-	-	-	-	-	8	OBSOLETE	SEE PN 334828812	34950-1611	34950-1621	34951-1631	34951-1641
						-	-	11	12	13	-	-	16						
MX150 ASSY BLD 2X8 BK A/8	334821813	A-BLACK	GCP	PLR	M-R	-	-	-	4	5	6	7	-	OBSOLETE	SEE PN 334828813	34950-1611	34950-1621	34951-1631	34951-1641
						-	10	-	-	-	14	15	16						
MX150 ASSY BLD 2X8 BK A/14	334821814	A-BLACK	GCP	PLR	M-R	-	-	-	-	-	-	7	-	OBSOLETE	SEE PN 334828814	34950-1611	34950-1621	34951-1631	34951-1641
						-	10	-	-	-	-	-	-						
MX150 ASSY BLD 2X8 BK A/10	334821815	A-BLACK	GCP	PLR	M-R	1	-	3	-	5	6	-	-	OBSOLETE	SEE PN 334828815	34950-1611	34950-1621	34951-1631	34951-1641
						-	-	-	12	13	-	-	-						
MX150 ASSY BLD 2X8 BK A/7	334821816	A-BLACK	GCP	PLR	M-R	-	-	3	-	5	6	7	-	OBSOLETE	SEE PN 334828816	34950-1611	34950-1621	34951-1631	34951-1641
						-	10	-	-	13	14	15	16						

molex

MX150 2X8 BLADE SEALED ASSEMBLY MAT SEAL
BOM AND PIN OUT SHEET

ASSEMBLY DESCRIPTION	ASSEMBLY PART NUMBER	COMPONENT: THE PRESENCE OF AN ABBREVIATION INDICATES THE PRESENCE OF THAT COMPONENT				BLOCKED TERMINALS: CAVITY WITH A NUMBER INDICATES BLOCKED TERMINAL POSITION, CAVITY WITHOUT A NUMBER INDICATES OPEN TERMINAL POSITION								STATUS	COMMENT	OPTIONAL ATTACHMENTS SOLD SEPARATELY			
		HOUSING KEY/COLOR	GROMMET CAP	PLR	MAT SEAL											BACKSHELL WITH RIBS	BACKSHELL WITHOUT RIBS	90° ADAPTOR WITH RIBS	90° ADAPTOR WITHOUT RIBS
MX150 ASSY BLD 2X8 BK A/11	334821817	A-BLACK	GCP	PLR	M-R	-	-	-	-	-	-	-	-	OBSOLETE	SEE PN 334828817	34950-1611	34950-1621	34951-1631	34951-1641
						-	-	11	12	-	14	15	16						
MX150 ASSY BLD 2X8 BK A/7	334821818	A-BLACK	GCP	PLR	M-R	-	-	-	-	-	6	7	8	OBSOLETE	SEE PN 334828818	34950-1611	34950-1621	34951-1631	34951-1641
						-	10	11	12	13	14	15	-						
MX150 ASSY BLD 2X8 BK A/6	334821819	A-BLACK	GCP	PLR	M-R	1	2	-	-	-	-	7	-	OBSOLETE	SEE PN 334828819	34950-1611	34950-1621	34951-1631	34951-1641
						9	10	11	12	13	14	-	16						
MX150 ASSY BLD 2X8 BK A/9	334821820	A-BLACK	GCP	PLR	M-R	-	2	-	-	-	-	7	-	OBSOLETE	SEE PN 334828820	34950-1611	34950-1621	34951-1631	34951-1641
						9	-	-	12	13	14	-	16						
MX150 ASSY BLD 2X8 BK A/8	334821821	A-BLACK	GCP	PLR	M-R	-	2	3	-	-	-	7	-	OBSOLETE	SEE PN 334828821	34950-1611	34950-1621	34951-1631	34951-1641
						9	10	11	-	-	-	15	16						
MX150 ASSY BLD 2X8 BK A/8	334821822	A-BLACK	GCP	PLR	M-R	1	-	-	4	5	6	-	8	OBSOLETE	SEE PN 334828822	34950-1611	34950-1621	34951-1631	34951-1641
						-	-	-	12	13	14	-	-						
MX150 ASSY BLD 2X8 LG B/9	334821823	B-LIGHT GRAY	GCP	PLR	M-R	-	-	-	-	5	6	-	-	OBSOLETE	SEE PN 334828823	34950-1611	34950-1621	34951-1631	34951-1641
						9	-	-	12	13	14	15	-						
MX150 ASSY BLD 2X8 BK A/14	334821824	A-BLACK	GCP	PLR	M-R	-	-	-	-	-	-	7	8	OBSOLETE	SEE PN 334828824	34950-1611	34950-1621	34951-1631	34951-1641
						-	-	-	-	-	-	-	-						
MX150 ASSY BLD 2X8 BK A/11	334821825	A-BLACK	GCP	PLR	M-R	-	-	-	-	-	-	-	-	OBSOLETE	SEE PN 334828772	34950-1611	34950-1621	34951-1631	34951-1641
						-	10	-	-	13	14	15	16						
MX150 ASSY BLD 2X8 BK A/8	334821826	A-BLACK	GCP	PLR	M-R	1	2	3	4	5	6	-	-	OBSOLETE	SEE PN 334828773	34950-1611	34950-1621	34951-1631	34951-1641
						-	-	11	12	-	-	-	-						
MX150 ASSY BLD 2X8 BK A/10	334821827	A-BLACK	GCP	PLR	M-R	-	-	3	4	-	6	7	-	OBSOLETE	SEE PN 334828827	34950-1611	34950-1621	34951-1631	34951-1641
						9	-	-	-	-	-	-	16						
MX150 ASSY BLD 2X8 BK A/12	334821828	A-BLACK	GCP	PLR	M-R	-	-	-	-	-	6	7	-	OBSOLETE	SEE PN 334828828	34950-1611	34950-1621	34951-1631	34951-1641
						9	-	-	-	-	-	-	16						
MX150 ASSY BLD 2X8 BK A/7	334821829	A-BLACK	GCP	PLR	M-R	1	2	-	4	5	-	7	8	OBSOLETE	SEE PN 334828829	34950-1611	34950-1621	34951-1631	34951-1641
						9	-	-	-	-	-	15	16						
MX150 ASSY BLD 2X8 BK A/11	334821830	A-BLACK	GCP	PLR	M-R	-	-	-	-	-	-	-	-	OBSOLETE	SEE PN 334828830	34950-1611	34950-1621	34951-1631	34951-1641
						-	-	11	12	13	14	15	-						
MX150 ASSY BLD 2X8 BK A/13	334821831	A-BLACK	GCP	PLR	M-R	-	-	-	-	-	-	-	-	OBSOLETE	SEE PN 334828831	34950-1611	34950-1621	34951-1631	34951-1641
						-	-	-	12	13	14	-	-						
MX150 ASSY BLD 2X8 LG B/14	334821832	B-LIGHT GRAY	GCP	PLR	M-R	-	-	-	-	-	-	-	-	OBSOLETE	SEE PN 334828832	34950-1611	34950-1621	34951-1631	34951-1641
						-	-	-	-	-	14	15	-						
MX150 ASSY BLD 2X8 BK A/10	334821833	A-BLACK	GCP	PLR	M-R	-	2	-	-	-	-	-	8	OBSOLETE	SEE PN 334828833	34950-1611	34950-1621	34951-1631	34951-1641
						-	10	11	-	-	-	15	16						
MX150 ASSY BLD 2X8 BK A/13	334821834	A-BLACK	GCP	PLR	M-R	-	-	-	-	-	-	-	-	OBSOLETE	SEE PN 334828834	34950-1611	34950-1621	34951-1631	34951-1641
						-	10	11	-	-	-	15	-						
MX150 ASSY BLD 2X8 BK A/11	334821835	A-BLACK	GCP	PLR	M-R	1	-	-	-	-	-	-	8	OBSOLETE	SEE PN 334828835	34950-1611	34950-1621	34951-1631	34951-1641
						-	10	11	-	-	-	15	-						
MX150 ASSY BLD 2X8 BK A/5	334821836	A-BLACK	GCP	PLR	M-R	1	2	3	4	5	6	7	8	OBSOLETE	SEE PN 334828836	34950-1611	34950-1621	34951-1631	34951-1641
						-	10	11	-	-	-	15	-						
MX150 ASSY BLD 2X8 BK A/9	334821837	A-BLACK	GCP	PLR	M-R	1	-	-	-	-	-	-	8	OBSOLETE	SEE PN 334828837	34950-1611	34950-1621	34951-1631	34951-1641
						9	10	11	-	-	-	15	16						
MX150 ASSY BLD 2X8 BK A/11	334821838	A-BLACK	GCP	PLR	M-R	-	-	-	-	-	-	-	-	OBSOLETE	SEE PN 334828838	34950-1611	34950-1621	34951-1631	34951-1641
						9	10	11	-	-	-	15	16						
MX150 ASSY BLD 2X8 BK A/8	334821839	A-BLACK	GCP	PLR	M-R	1	2	3	4	5	6	7	8	OBSOLETE	SEE PN 334828839	34950-1611	34950-1621	34951-1631	34951-1641
						-	-	-	-	-	-	-	-						
MX150 ASSY BLD 2X8 BK A/15	334821840	A-BLACK	GCP	PLR	M-R	1	-	-	-	-	-	-	-	OBSOLETE	SEE PN 334828840	34950-1611	34950-1621	34951-1631	34951-1641
						-	-	-	-	-	-	-	-						
MX150 ASSY BLD 2X8 BK A/6	334821841	A-BLACK	GCP	PLR	M-R	1	2	3	4	5	6	7	8	OBSOLETE	SEE PN 334828841	34950-1611	34950-1621	34951-1631	34951-1641
						-	-	11	-	-	-	-	16						
MX150 ASSY BLD 2X8 BK A/11	334821842	A-BLACK	GCP	PLR	M-R	1	-	-	4	5	6	7	-	OBSOLETE	SEE PN 334828842	34950-1611	34950-1621	34951-1631	34951-1641
						-	-	-	-	-	-	-	-						
MX150 ASSY BLD 2X8 BK A/9	334821843	A-BLACK	GCP	PLR	M-R	1	-	-	4	5	6	7	8	OBSOLETE	SEE PN 334828843	34950-1611	34950-1621	34951-1631	34951-1641
						-	-	11	-	-	-	-	-						

molex

MX150 2X8 BLADE SEALED ASSEMBLY MAT SEAL
BOM AND PIN OUT SHEET

ASSEMBLY DESCRIPTION	ASSEMBLY PART NUMBER	COMPONENT: THE PRESENCE OF AN ABBREVIATION INDICATES THE PRESENCE OF THAT COMPONENT				BLOCKED TERMINALS: CAVITY WITH A NUMBER INDICATES BLOCKED TERMINAL POSITION, CAVITY WITHOUT A NUMBER INDICATES OPEN TERMINAL POSITION								STATUS	COMMENT	OPTIONAL ATTACHMENTS SOLD SEPARATELY			
		HOUSING KEY/COLOR	GROMMET CAP	PLR	MAT SEAL											BACKSHELL WITH RIBS	BACKSHELL WITHOUT RIBS	90° ADAPTOR WITH RIBS	90° ADAPTOR WITHOUT RIBS
MX150 ASSY BLD 2X8 BK A/14	334821844	A-BLACK	GCP	PLR	M-R	-	-	-	-	-	-	-	-	OBSOLETE	SEE PN 334828844	34950-1611	34950-1621	34951-1631	34951-1641
						-	-	-	-	13	-	-	16						
MX150 ASSY BLD 2X8 BK A/12	334821845	A-BLACK	GCP	PLR	M-R	-	-	-	-	-	-	-	-	OBSOLETE	SEE PN 334828845	34950-1611	34950-1621	34951-1631	34951-1641
						-	-	11	12	13	-	-	16						
MX150 ASSY BLD 2X8 BK A/13	334821846	A-BLACK	GCP	PLR	M-R	1	-	-	-	-	-	-	8	OBSOLETE	SEE PN 334828846	34950-1611	34950-1621	34951-1631	34951-1641
						-	-	11	-	-	-	-	-						
MX150 ASSY BLD 2X8 BK A/6	334821847	A-BLACK	GCP	PLR	M-R	1	2	-	-	-	6	7	8	OBSOLETE	SEE PN 334828847	34950-1611	34950-1621	34951-1631	34951-1641
						9	10	-	-	-	14	15	16						
MX150 ASSY BLD 2X8 BK A/8	334821848	A-BLACK	GCP	PLR	M-R	1	2	-	-	-	-	7	8	OBSOLETE	SEE PN 334828848	34950-1611	34950-1621	34951-1631	34951-1641
						9	10	-	-	-	-	15	16						
MX150 ASSY BLD 2X8 BK A/4	334821849	A-BLACK	GCP	PLR	M-R	-	-	3	4	5	6	7	8	OBSOLETE	SEE PN 334828849	34950-1611	34950-1621	34951-1631	34951-1641
						-	-	11	12	13	14	15	16						
MX150 ASSY BLD 2X8 BK A/10	334821850	A-BLACK	GCP	PLR	M-R	-	-	-	-	-	6	7	8	OBSOLETE	SEE PN 334828850	34950-1611	34950-1621	34951-1631	34951-1641
						-	-	-	-	-	14	15	16						
MX150 ASSY BLD 2X8 BK A/12	334821851	A-BLACK	GCP	PLR	M-R	-	-	-	-	-	-	7	8	OBSOLETE	SEE PN 334828851	34950-1611	34950-1621	34951-1631	34951-1641
						-	-	-	-	-	-	15	16						
MX150 ASSY BLD 2X8 BK A/9	334821852	A-BLACK	GCP	PLR	M-R	-	-	3	4	5	6	7	-	OBSOLETE	SEE PN 334828852	34950-1611	34950-1621	34951-1631	34951-1641
						9	-	-	-	-	-	-	16						
MX150 ASSY BLD 2X8 BK A/13	334821853	A-BLACK	GCP	PLR	M-R	-	-	-	4	-	-	-	-	OBSOLETE	SEE PN 334828853	34950-1611	34950-1621	34951-1631	34951-1641
						9	-	-	12	-	-	-	-						
MX150 ASSY BLD 2X8 BK A/12	334821854	A-BLACK	GCP	PLR	M-R	-	-	-	4	-	-	-	-	OBSOLETE	SEE PN 334828854	34950-1611	34950-1621	34951-1631	34951-1641
						9	10	-	12	-	-	-	-						
MX150 ASSY BLD 2X8 BK A/10	334821855	A-BLACK	GCP	PLR	M-R	-	-	3	4	-	-	-	-	OBSOLETE	SEE PN 334828855	34950-1611	34950-1621	34951-1631	34951-1641
						9	10	-	-	13	14	-	-						
MX150 ASSY BLD 2X8 BK A/8	334821856	A-BLACK	GCP	PLR	M-R	1	2	-	4	-	6	7	8	OBSOLETE	SEE PN 334828856	34950-1611	34950-1621	34951-1631	34951-1641
						9	-	-	12	-	-	-	-						
MX150 ASSY BLD 2X8 BK A/7	334821857	A-BLACK	GCP	PLR	M-R	1	2	-	4	-	6	7	8	OBSOLETE	SEE PN 334828857	34950-1611	34950-1621	34951-1631	34951-1641
						9	10	-	12	-	-	-	-						
MX150 ASSY BLD 2X8 BK A/4	334821858	A-BLACK	GCP	PLR	M-R	1	2	3	4	-	6	7	8	OBSOLETE	SEE PN 334828858	34950-1611	34950-1621	34951-1631	34951-1641
						9	10	-	-	13	14	-	16						
MX150 ASSY BLD 2X8 BK A/6	334821859	A-BLACK	GCP	PLR	M-R	-	2	-	-	5	-	7	-	OBSOLETE	SEE PN 334828859	34950-1611	34950-1621	34951-1631	34951-1641
						9	10	11	12	13	14	-	16						
MX150 ASSY BLD 2X8 BK A/11	334821860	A-BLACK	GCP	PLR	M-R	-	-	-	-	-	-	-	-	OBSOLETE	SEE PN 334828860	34950-1611	34950-1621	34951-1631	34951-1641
						-	10	11	12	13	-	-	16						
MX150 ASSY BLD 2X8 BK A/3	334821861	A-BLACK	GCP	PLR	M-R	1	2	3	-	5	6	7	8	OBSOLETE	SEE PN 334828861	34950-1611	34950-1621	34951-1631	34951-1641
						-	10	11	-	13	14	15	16						
MX150 ASSY BLD 2X8 BK A/4	334821862	A-BLACK	GCP	PLR	M-R	1	2	3	-	5	6	7	8	OBSOLETE	SEE PN 334828862	34950-1611	34950-1621	34951-1631	34951-1641
						-	-	11	-	13	14	15	16						
MX150 ASSY BLD 2X8 BK A/12	334821863	A-BLACK	GCP	PLR	M-R	-	-	-	-	-	-	7	8	OBSOLETE	SEE PN 334828863	34950-1611	34950-1621	34951-1631	34951-1641
						-	-	-	-	13	-	-	16						
MX150 ASSY BLD 2X8 BK A/11	334821864	A-BLACK	GCP	PLR	M-R	-	-	-	-	-	-	7	8	OBSOLETE	SEE PN 334828864	34950-1611	34950-1621	34951-1631	34951-1641
						9	-	-	-	13	-	-	16						
MX150 ASSY BLD 2X8 BK A/8	334821865	A-BLACK	GCP	PLR	M-R	-	-	-	-	-	-	7	8	OBSOLETE	SEE PN 334828865	34950-1611	34950-1621	34951-1631	34951-1641
						9	10	11	12	13	14	-	-						
MX150 ASSY BLD 2X8 BK A/11	334821866	A-BLACK	GCP	PLR	M-R	-	-	-	-	-	6	-	-	OBSOLETE	SEE PN 334828866	34950-1611	34950-1621	34951-1631	34951-1641
						-	-	11	12	13	14	-	-						
MX150 ASSY BLD 2X8 BK A/2	334821867	A-BLACK	GCP	PLR	M-R	1	2	3	4	5	6	7	8	OBSOLETE	SEE PN 334828867	34950-1611	34950-1621	34951-1631	34951-1641
						-	10	11	12	13	14	15	-						
MX150 ASSY BLD 2X8 BK A/3	334821868	A-BLACK	GCP	PLR	M-R	1	2	3	4	5	6	7	8	OBSOLETE	SEE PN 334828868	34950-1611	34950-1621	34951-1631	34951-1641
						9	10	11	-	-	-	15	16						
MX150 ASSY BLD 2X8 BK A/14	334821869	A-BLACK	GCP	PLR	M-R	-	-	3	-	-	6	-	-	OBSOLETE	SEE PN 334828869	34950-1611	34950-1621	34951-1631	34951-1641
						-	-	-	-	-	-	-	-						
MX150 ASSY BLD 2X8 LG B/11	334821870	B-LIGHT GRAY	GCP	PLR	M-R	-	-	-	-	-	6	-	-	OBSOLETE	SEE PN 334828870	34950-1611	34950-1621	34951-1631	34951-1641
						-	-	-	-	13	14	15	16						

molex

MX150 2X8 BLADE SEALED ASSEMBLY MAT SEAL
BOM AND PIN OUT SHEET

ASSEMBLY DESCRIPTION	ASSEMBLY PART NUMBER	COMPONENT				BLOCKED TERMINALS								STATUS	COMMENT	OPTIONAL ATTACHMENTS SOLD SEPARATELY			
		THE PRESENCE OF AN ABBREVIATION INDICATES THE PRESENCE OF THAT COMPONENT				CAVITY WITH A NUMBER INDICATES BLOCKED TERMINAL POSITION CAVITY WITHOUT A NUMBER INDICATES OPEN TERMINAL POSITION													
		HOUSING KEY/COLOR	GROMMET CAP	PLR	MAT SEAL											BACKSHELL WITH RIBS	BACKSHELL WITHOUT RIBS	90° ADAPTOR WITH RIBS	90° ADAPTOR WITHOUT RIBS
MX150 ASSY BLD 2X8 LG B/11	334821871	B-LIGHT GRAY	GCP	PLR	M-R	-	-	-	-	5	-	-	-	OBSOLETE	SEE PN 334828871	34950-1611	34950-1621	34951-1631	34951-1641
						-	-	-	-	13	14	15	16						
MX150 ASSY BLD 2X8 BK A/12	334821872	A-BLACK	GCP	PLR	M-R	-	-	3	4	-	-	-	-	OBSOLETE	SEE PN 334828872	34950-1611	34950-1621	34951-1631	34951-1641
						-	-	-	-	-	-	15	16						
MX150 ASSY BLD 2X8 BK A/12	334821873	A-BLACK	GCP	PLR	M-R	-	-	-	-	-	-	-	-	OBSOLETE	SEE PN 334828873	34950-1611	34950-1621	34951-1631	34951-1641
						-	10	11	-	13	-	-	16						
MX150 ASSY BLD 2X8 BK A/9	334821874	A-BLACK	GCP	PLR	M-R	-	2	-	-	-	-	7	8	OBSOLETE	SEE PN 334828874	34950-1611	34950-1621	34951-1631	34951-1641
						-	-	-	-	13	14	15	16						
MX150 ASSY BLD 2X8 BK A/12	334821875	A-BLACK	GCP	PLR	M-R	-	-	-	-	-	6	-	-	OBSOLETE	SEE PN 334828875	34950-1611	34950-1621	34951-1631	34951-1641
						-	10	11	12	-	-	-	-						
MX150 ASSY BLD 2X8 BK A/10	334821876	A-BLACK	GCP	PLR	M-R	1	2	3	4	5	6	-	-	OBSOLETE	SEE PN 334828876	34950-1611	34950-1621	34951-1631	34951-1641
						-	-	-	-	-	-	-	-						
MX150 ASSY BLD 2X8 BK A/11	334821877	A-BLACK	GCP	PLR	M-R	-	2	-	-	5	-	-	-	OBSOLETE	SEE PN 334828877	34950-1611	34950-1621	34951-1631	34951-1641
						9	-	-	12	13	-	-	-						
MX150 ASSY BLD 2X8 BK A/7	334821878	A-BLACK	GCP	PLR	M-R	-	2	-	-	-	-	7	-	OBSOLETE	SEE PN 334828878	34950-1611	34950-1621	34951-1631	34951-1641
						9	10	11	12	13	14	-	16						
MX150 ASSY BLD 2X8 BK A/9	334821879	A-BLACK	GCP	PLR	M-R	1	2	3	4	5	-	7	8	OBSOLETE	SEE PN 334828879	34950-1611	34950-1621	34951-1631	34951-1641
						-	-	-	-	-	-	-	-						
MX150 ASSY BLD 2X8 BK A/8	334821880	A-BLACK	GCP	PLR	M-R	-	-	-	-	-	-	7	8	OBSOLETE	SEE PN 334828880	34950-1611	34950-1621	34951-1631	34951-1641
						9	-	11	12	-	14	15	16						
MX150 ASSY BLD 2X8 BK A/14	334821881	A-BLACK	GCP	PLR	M-R	1	2	-	-	-	-	-	-	OBSOLETE	SEE PN 334828881	34950-1611	34950-1621	34951-1631	34951-1641
						-	-	-	-	-	-	-	-						
MX150 ASSY BLD 2X8 BK A/6	334821882	A-BLACK	GCP	PLR	M-R	-	-	3	-	-	6	-	-	OBSOLETE	SEE PN 334828882	34950-1611	34950-1621	34951-1631	34951-1641
						9	10	11	12	13	14	15	16						
MX150 ASSY BLD 2X8 BK A/12	334821883	A-BLACK	GCP	PLR	M-R	-	-	-	-	-	6	-	8	OBSOLETE	SEE PN 334828883	34950-1611	34950-1621	34951-1631	34951-1641
						-	-	-	-	-	-	15	16						
MX150 ASSY BLD 2X8 BK A/8	334821884	A-BLACK	GCP	PLR	M-R	-	-	-	-	-	6	-	8	OBSOLETE	SEE PN 334828884	34950-1611	34950-1621	34951-1631	34951-1641
						9	10	11	12	-	-	15	16						
MX150 ASSY BLD 2X8 BK A/6	334821885	A-BLACK	GCP	PLR	M-R	-	-	3	4	-	6	-	8	OBSOLETE	SEE PN 334828885	34950-1611	34950-1621	34951-1631	34951-1641
						9	10	11	12	-	-	15	16						
MX150 ASSY BLD 2X8 BK A/10	334821886	A-BLACK	GCP	PLR	M-R	-	-	3	4	-	6	-	8	OBSOLETE	SEE PN 334828886	34950-1611	34950-1621	34951-1631	34951-1641
						-	-	-	-	-	-	15	16						
MX150 ASSY BLD 2X8 BK A/10	334821887	A-BLACK	GCP	PLR	M-R	-	-	-	4	-	-	-	8	OBSOLETE	SEE PN 334828887	34950-1611	34950-1621	34951-1631	34951-1641
						9	10	-	-	-	-	15	16						
MX150 ASSY BLD 2X8 BK A/12	334821888	A-BLACK	GCP	PLR	M-R	-	-	-	-	-	-	-	8	OBSOLETE	SEE PN 334828888	34950-1611	34950-1621	34951-1631	34951-1641
						9	-	-	-	-	-	15	16						
MX150 ASSY BLD 2X8 BK A/8	334821889	A-BLACK	GCP	PLR	M-R	-	-	-	4	-	-	-	8	OBSOLETE	SEE PN 334828889	34950-1611	34950-1621	34951-1631	34951-1641
						9	10	-	-	13	14	15	16						
MX150 ASSY BLD 2X8 BK A/10	334821890	A-BLACK	GCP	PLR	M-R	-	-	-	-	-	-	-	-	OBSOLETE	SEE PN 334828890	34950-1611	34950-1621	34951-1631	34951-1641
						9	10	11	-	13	-	15	16						
MX150 ASSY BLD 2X8 BK A/8	334821891	A-BLACK	GCP	PLR	M-R	1	-	-	-	-	-	-	8	OBSOLETE	SEE PN 334828891	34950-1611	34950-1621	34951-1631	34951-1641
						9	10	11	-	13	-	15	16						
MX150 ASSY BLD 2X8 BK A/2	334821892	A-BLACK	GCP	PLR	M-R	1	2	3	4	5	6	7	8	OBSOLETE	SEE PN 334828892	34950-1611	34950-1621	34951-1631	34951-1641
						9	10	11	-	13	-	15	16						
MX150 ASSY BLD 2X8 BK A/8	334821893	A-BLACK	GCP	PLR	M-R	1	2	3	-	-	-	7	-	OBSOLETE	SEE PN 334828893	34950-1611	34950-1621	34951-1631	34951-1641
						9	-	-	12	13	-	-	16						
MX150 ASSY BLD 2X8 BK A/10	334821894	A-BLACK	GCP	PLR	M-R	-	-	3	-	-	6	-	-	OBSOLETE	SEE PN 334828894	34950-1611	34950-1621	34951-1631	34951-1641
						9	-	11	-	13	14	-	-						
MX150 ASSY BLD 2X8 BK A/14	334821895	A-BLACK	GCP	PLR	M-R	-	-	-	-	-	-	-	8	OBSOLETE	SEE PN 334828895	34950-1611	34950-1621	34951-1631	34951-1641
						-	-	-	-	-	-	-	16						
MX150 ASSY BLD 2X8 BK A/11	334821896	A-BLACK	GCP	PLR	M-R	-	-	3	-	-	6	-	-	OBSOLETE	SEE PN 334828896	34950-1611	34950-1621	34951-1631	34951-1641
						9	-	11	-	-	14	-	-						
MX150 ASSY BLD 2X8 BK A/1	334821897	A-BLACK	GCP	PLR	M-R	1	2	3	4	5	6	7	8	OBSOLETE	SEE PN 334828897	34950-1611	34950-1621	34951-1631	34951-1641
						9	10	11	12	13	14	15	-						

molex

MX150 2X8 BLADE SEALED ASSEMBLY MAT SEAL
BOM AND PIN OUT SHEET

ASSEMBLY DESCRIPTION	ASSEMBLY PART NUMBER	COMPONENT: THE PRESENCE OF AN ABBREVIATION INDICATES THE PRESENCE OF THAT COMPONENT				BLOCKED TERMINALS: CAVITY WITH A NUMBER INDICATES BLOCKED TERMINAL POSITION, CAVITY WITHOUT A NUMBER INDICATES OPEN TERMINAL POSITION								STATUS	COMMENT	OPTIONAL ATTACHMENTS SOLD SEPARATELY			
		HOUSING KEY/COLOR	GROMMET CAP	PLR	MAT SEAL											BACKSHELL WITH RIBS	BACKSHELL WITHOUT RIBS	90° ADAPTOR WITH RIBS	90° ADAPTOR WITHOUT RIBS
MX150 ASSY BLD 2X8 BK A/2	334821898	A-BLACK	GCP	PLR	M-R	1	2	3	4	5	-	7	8	OBSOLETE	SEE PN 334828898	34950-1611	34950-1621	34951-1631	34951-1641
						9	10	11	12	13	14	15	-						
MX150 ASSY BLD 2X8 BK A/8	334821899	A-BLACK	GCP	PLR	M-R	1	2	3	-	-	-	7	8	OBSOLETE	SEE PN 334828899	34950-1611	34950-1621	34951-1631	34951-1641
						-	10	11	-	-	14	-	-						
MX150 ASSY BLD 2X8 BK A/10	334821900	A-BLACK	GCP	PLR	M-R	1	2	-	-	-	-	7	8	OBSOLETE	SEE PN 334828900	34950-1611	34950-1621	34951-1631	34951-1641
						-	10	-	-	-	14	-	-						
MX150 ASSY BLD 2X8 BK A/4	334821901	A-BLACK	GCP	PLR	M-R	-	2	3	4	5	-	7	-	OBSOLETE	SEE PN 334828901	34950-1611	34950-1621	34951-1631	34951-1641
						9	10	11	12	13	14	15	-						
MX150 ASSY BLD 2X8 BK A/10	334821902	A-BLACK	GCP	PLR	M-R	-	2	3	-	-	-	7	-	OBSOLETE	SEE PN 334828902	34950-1611	34950-1621	34951-1631	34951-1641
						-	10	11	-	-	14	-	-						
MX150 ASSY BLD 2X8 BK A/12	334821903	A-BLACK	GCP	PLR	M-R	-	2	-	-	-	-	7	-	OBSOLETE	SEE PN 334828903	34950-1611	34950-1621	34951-1631	34951-1641
						-	10	-	-	-	14	-	-						
MX150 ASSY BLD 2X8 BK A/4	334821904	A-BLACK	GCP	PLR	M-R	1	2	-	-	5	6	-	8	OBSOLETE	SEE PN 334828904	34950-1611	34950-1621	34951-1631	34951-1641
						-	10	11	12	13	14	15	16						
MX150 ASSY BLD 2X8 BK A/8	334821905	A-BLACK	GCP	PLR	M-R	1	2	-	-	-	-	-	-	OBSOLETE	SEE PN 334828905	34950-1611	34950-1621	34951-1631	34951-1641
						-	-	11	12	13	14	15	16						
MX150 ASSY BLD 2X8 BK A/8	334821906	A-BLACK	GCP	PLR	M-R	1	2	3	-	-	-	-	8	OBSOLETE	SEE PN 334828906	34950-1611	34950-1621	34951-1631	34951-1641
						-	10	11	-	-	14	-	16						
MX150 ASSY BLD 2X8 BK A/11	334821907	A-BLACK	GCP	PLR	M-R	-	2	3	-	-	-	-	-	OBSOLETE	SEE PN 334828907	34950-1611	34950-1621	34951-1631	34951-1641
						-	10	11	-	-	14	-	-						
MX150 ASSY BLD 2X8 BK A/13	334821908	A-BLACK	GCP	PLR	M-R	-	2	-	-	-	-	-	-	OBSOLETE	SEE PN 334828908	34950-1611	34950-1621	34951-1631	34951-1641
						-	10	-	-	-	14	-	-						
MX150 ASSY BLD 2X8 BK A/6	334821909	A-BLACK	GCP	PLR	M-R	1	2	3	4	5	6	7	8	OBSOLETE	SEE PN 334828909	34950-1611	34950-1621	34951-1631	34951-1641
						-	-	-	-	-	14	15	-						
MX150 ASSY BLD 2X8 BK A/8	334827000	A-BLACK	GCP	PLR	M-B	-	2	-	-	-	6	7	8	SALEABLE		34950-1611	34950-1621	34951-1631	34951-1641
						-	10	-	-	13	-	15	16						
MX150 ASSY BLD 2X8 BK A/10	334827001	A-BLACK	GCP	PLR	M-B	-	-	-	-	-	-	7	-	SALEABLE		34950-1611	34950-1621	34951-1631	34951-1641
						-	-	-	12	13	14	15	16						
MX150 ASSY BLD 2X8 BK A/10	334827002	A-BLACK	GCP	PLR	M-B	-	-	-	4	5	-	-	-	SALEABLE		34950-1611	34950-1621	34951-1631	34951-1641
						9	-	-	12	13	-	15	-						
MX150 ASSY BLD 2X8 BK A/10	334827003	A-BLACK	GCP	PLR	M-B	-	-	-	-	-	6	-	-	SALEABLE		34950-1611	34950-1621	34951-1631	34951-1641
						-	10	-	-	13	14	15	16						
MX150 ASSY BLD 2X8 DG C/12	334827004	C-DARK GRAY	GCP	PLR	M-B	-	-	3	-	-	6	-	-	SALEABLE		34950-1611	34950-1621	34951-1631	34951-1641
						-	-	11	-	-	14	-	-						
MX150 ASSY BLD 2X8 BK A/9	334827005	A-BLACK	GCP	PLR	M-B	1	2	-	4	5	6	-	-	SALEABLE		34950-1611	34950-1621	34951-1631	34951-1641
						-	10	-	-	-	14	-	-						
MX150 ASSY BLD 2X8 BK A/9	334827006	A-BLACK	GCP	PLR	M-B	-	-	-	-	-	-	7	8	SALEABLE		34950-1611	34950-1621	34951-1631	34951-1641
						-	-	11	12	13	14	15	-						
MX150 ASSY BLD 2X8 BK A/8	334827007	A-BLACK	GCP	PLR	M-B	-	-	-	-	-	6	7	8	SALEABLE		34950-1611	34950-1621	34951-1631	34951-1641
						-	-	11	12	13	14	15	-						
MX150 ASSY BLD 2X8 SG D/15	334827008	D-STONE GRAY	GCP	PLR	M-B	1	-	-	-	-	-	-	-	SALEABLE		34950-1611	34950-1621	34951-1631	34951-1641
						-	-	-	-	-	-	-	-						
MX150 ASSY BLD 2X8 YW A/15	334827009	A-YELLOW	GCP	PLR	M-B	1	-	-	-	-	-	-	-	SALEABLE		34950-1611	34950-1621	34951-1631	34951-1641
						-	-	-	-	-	-	-	-						
MX150 ASSY BLD 2X8 BK A/8	334827010	A-BLACK	GCP	PLR	M-B	-	-	3	4	-	-	-	-	SALEABLE		34950-1611	34950-1621	34951-1631	34951-1641
						9	10	11	12	-	-	15	16						
MX150 ASSY BLD 2X8 BK A/7	334827011	A-BLACK	GCP	PLR	M-B	-	2	-	-	5	6	7	-	SALEABLE		34950-1611	34950-1621	34951-1631	34951-1641
						9	10	-	12	13	-	-	16						
MX150 ASSY BLD 2X8 BK A/14	334827012	A-BLACK	GCP	PLR	M-B	-	-	-	-	-	-	-	-	SALEABLE		34950-1611	34950-1621	34951-1631	34951-1641
						-	-	-	-	-	-	15	16						
MX150 ASSY BLD 2X8 BK A/6	334827013	A-BLACK	GCP	PLR	M-B	1	2	3	4	5	6	-	-	SALEABLE		34950-1611	34950-1621	34951-1631	34951-1641
						-	-	-	12	-	14	15	16						
MX150 ASSY BLD 2X8 BK A/10	334827014	A-BLACK	GCP	PLR	M-B	1	-	-	-	-	-	-	-	SALEABLE		34950-1611	34950-1621	34951-1631	34951-1641
						-	-	11	12	13	-	15	16						

molex

MX150 2X8 BLADE SEALED ASSEMBLY MAT SEAL
BOM AND PIN OUT SHEET

ASSEMBLY DESCRIPTION	ASSEMBLY PART NUMBER	COMPONENT THE PRESENCE OF AN ABBREVIATION INDICATES THE PRESENCE OF THAT COMPONENT				BLOCKED TERMINALS CAVITY WITH A NUMBER INDICATES BLOCKED TERMINAL POSITION CAVITY WITHOUT A NUMBER INDICATES OPEN TERMINAL POSITION								STATUS	COMMENT	OPTIONAL ATTACHMENTS SOLD SEPARATELY			
		HOUSING KEY/COLOR	GROMMET CAP	PLR	MAT SEAL											BACKSHELL WITH RIBS	BACKSHELL WITHOUT RIBS	90^0 ADAPTOR WITH RIBS	90^0 ADAPTOR WITHOUT RIBS
MX150 ASSY BLD 2X8 LG B/14	334827015	B-LIGHT GRAY	GCP	PLR	M-B	-	-	-	-	-	-	-	-	SALEABLE		34950-1611	34950-1621	34951-1631	34951-1641
						-	-	11	-	13	-	-	-						
MX150 ASSY BLD 2X8 BK A/13	334827016	A-BLACK	GCP	PLR	M-B	-	-	-	-	-	6	-	-	SALEABLE		34950-1611	34950-1621	34951-1631	34951-1641
						-	10	-	-	-	-	15	-						
MX150 ASSY BLD 2X8 BK A/4	334827017	A-BLACK	GCP	PLR	M-B	1	2	3	4	-	-	-	-	SALEABLE		34950-1611	34950-1621	34951-1631	34951-1641
						9	10	11	12	13	14	15	16						
MX150 ASSY BLD 2X8 BK A/2	334827018	A-BLACK	GCP	PLR	M-B	1	2	3	4	-	-	7	8	SALEABLE		34950-1611	34950-1621	34951-1631	34951-1641
						9	10	11	12	13	14	15	16						
MX150 ASSY BLD 2X8 BK A/14	334827019	A-BLACK	GCP	PLR	M-B	-	-	-	-	-	-	-	-	SALEABLE		34950-1611	34950-1621	34951-1631	34951-1641
						9	10	-	-	-	-	-	-						
MX150 ASSY BLD 2X8 BK A/13	334827020	A-BLACK	GCP	PLR	M-B	-	-	-	-	-	-	-	8	SALEABLE		34950-1611	34950-1621	34951-1631	34951-1641
						-	-	-	-	13	14	-	-						
MX150 ASSY BLD 2X8 LG B/7	334827021	B-LIGHT GRAY	GCP	PLR	M-B	1	2	3	4	5	6	7	8	SALEABLE		34950-1611	34950-1621	34951-1631	34951-1641
						-	-	-	-	-	-	-	16						
MX150 ASSY BLD 2X8 LG B/2	334827022	B-LIGHT GRAY	GCP	PLR	M-B	1	2	3	4	5	6	7	8	SALEABLE		34950-1611	34950-1621	34951-1631	34951-1641
						9	10	11	-	-	14	15	16						
MX150 ASSY BLD 2X8 LG B/6	334827023	B-LIGHT GRAY	GCP	PLR	M-B	1	-	-	4	5	-	-	8	SALEABLE		34950-1611	34950-1621	34951-1631	34951-1641
						9	10	11	-	-	14	15	16						
MX150 ASSY BLD 2X8 LG B/4	334827024	B-LIGHT GRAY	GCP	PLR	M-B	1	-	-	4	5	-	-	8	SALEABLE		34950-1611	34950-1621	34951-1631	34951-1641
						9	10	11	12	13	14	15	16						
MX150 ASSY BLD 2X8 LG B/7	334827025	B-LIGHT GRAY	GCP	PLR	M-B	1	-	-	4	5	-	-	8	SALEABLE		34950-1611	34950-1621	34951-1631	34951-1641
						9	10	11	12	13	-	-	-						
MX150 ASSY BLD 2X8 LG B/2	334827026	B-LIGHT GRAY	GCP	PLR	M-B	1	2	3	4	5	-	-	8	SALEABLE		34950-1611	34950-1621	34951-1631	34951-1641
						9	10	11	12	13	14	15	16						
MX150 ASSY BLD 2X8 LG B/5	334827027	B-LIGHT GRAY	GCP	PLR	M-B	1	2	3	4	5	-	-	8	SALEABLE		34950-1611	34950-1621	34951-1631	34951-1641
						9	10	11	12	13	-	-	-						
MX150 ASSY BLD 2X8 LG B/3	334827028	B-LIGHT GRAY	GCP	PLR	M-B	1	2	3	4	5	6	7	8	SALEABLE		34950-1611	34950-1621	34951-1631	34951-1641
						9	10	11	12	13	-	-	-						
MX150 ASSY BLD 2X8 BK A/11	334827029	A-BLACK	GCP	PLR	M-B	-	-	3	-	-	-	-	-	SALEABLE		34950-1611	34950-1621	34951-1631	34951-1641
						-	-	-	-	13	14	15	16						
MX150 ASSY BLD 2X8 LG B/3	334827030	B-LIGHT GRAY	GCP	PLR	M-B	1	2	3	4	5	6	7	8	SALEABLE		34950-1611	34950-1621	34951-1631	34951-1641
						-	-	11	-	13	14	15	16						
MX150 ASSY BLD 2X8 BK A/10	334827031	A-BLACK	GCP	PLR	M-B	1	-	-	-	-	-	-	8	SALEABLE		34950-1611	34950-1621	34951-1631	34951-1641
						9	-	-	-	13	-	15	16						
MX150 ASSY BLD 2X8 BK A/10	334827032	A-BLACK	GCP	PLR	M-B	-	-	-	-	-	-	-	8	SALEABLE		34950-1611	34950-1621	34951-1631	34951-1641
						-	-	11	12	13	-	15	16						
MX150 ASSY BLD 2X8 BK A/7	334827033	A-BLACK	GCP	PLR	M-B	1	-	-	-	-	-	-	8	SALEABLE		34950-1611	34950-1621	34951-1631	34951-1641
						9	10	11	12	13	-	15	16						
MX150 ASSY BLD 2X8 BK A/11	334827034	A-BLACK	GCP	PLR	M-B	-	-	3	4	5	-	-	-	SALEABLE		34950-1611	34950-1621	34951-1631	34951-1641
						9	-	-	-	-	14	-	-						
MX150 ASSY BLD 2X8 BK A/9	334827035	A-BLACK	GCP	PLR	M-B	-	-	-	-	-	-	-	-	SALEABLE		34950-1611	34950-1621	34951-1631	34951-1641
						-	10	11	12	13	14	15	16						
MX150 ASSY BLD 2X8 LG B/16	334827036	B-LIGHT GRAY	GCP	PLR	M-B	-	-	-	-	-	-	-	-	SALEABLE		34950-1611	34950-1621	34951-1631	34951-1641
						-	-	-	-	-	-	-	-						
MX150 ASSY BLD 2X8 BK A/16	334828601	A-BLACK	GCP	PLR	M-B	-	-	-	-	-	-	-	-	SALEABLE		34950-1611	34950-1621	34951-1631	34951-1641
						-	-	-	-	-	-	-	-						
MX150 ASSY BLD 2X8 LG B/16	334828602	B-LIGHT GRAY	GCP	PLR	M-B	-	-	-	-	-	-	-	-	SALEABLE		34950-1611	34950-1621	34951-1631	34951-1641
						-	-	-	-	-	-	-	-						
MX150 ASSY BLD 2X8 BR C/16	334828603	C-BROWN	GCP	PLR	M-B	-	-	-	-	-	-	-	-	NOT RECOMMENDED	SEE PN 334828725	34950-1611	34950-1621	34951-1631	34951-1641
						-	-	-	-	-	-	-	-						
MX150 ASSY BLD 2X8 GR D/16	334828604	D-GREEN	GCP	PLR	M-B	-	-	-	-	-	-	-	-	NOT RECOMMENDED	SEE PN 334828726	34950-1611	34950-1621	34951-1631	34951-1641
						-	-	-	-	-	-	-	-						
MX150 ASSY BLD 2X8 BK A/15	334828606	A-BLACK	GCP	PLR	M-B	-	-	-	-	-	-	-	8	SALEABLE		34950-1611	34950-1621	34951-1631	34951-1641
						-	-	-	-	-	-	-	-						

molex

MX150 2X8 BLADE SEALED ASSEMBLY MAT SEAL
BOM AND PIN OUT SHEET

ASSEMBLY DESCRIPTION	ASSEMBLY PART NUMBER	COMPONENT THE PRESENCE OF AN ABBREVIATION INDICATES THE PRESENCE OF THAT COMPONENT				BLOCKED TERMINALS CAVITY WITH A NUMBER INDICATES BLOCKED TERMINAL POSITION CAVITY WITHOUT A NUMBER INDICATES OPEN TERMINAL POSITION								STATUS	COMMENT	OPTIONAL ATTACHMENTS SOLD SEPARATELY			
		HOUSING KEY/COLOR	GROMMET CAP	PLR	MAT SEAL											BACKSHELL WITH RIBS	BACKSHELL WITHOUT RIBS	90° ADAPTOR WITH RIBS	90° ADAPTOR WITHOUT RIBS
MX150 ASSY BLD 2X8 LG B/15	334828607	B-LIGHT GRAY	GCP	PLR	M-B	-	-	-	-	-	-	-	8	SALEABLE		34950-1611	34950-1621	34951-1631	34951-1641
						-	-	-	-	-	-	-	-						
MX150 ASSY BLD 2X8 BR C/15	334828608	C-BROWN	GCP	PLR	M-B	-	-	-	-	-	-	-	8	NOT RECOMMENDED	SEE PN 334828751	34950-1611	34950-1621	34951-1631	34951-1641
						-	-	-	-	-	-	-	-						
MX150 ASSY BLD 2X8 GR D/15	334828609	D-GREEN	GCP	PLR	M-B	-	-	-	-	-	-	-	8	NOT RECOMMENDED	SEE PN 334828752	34950-1611	34950-1621	34951-1631	34951-1641
						-	-	-	-	-	-	-	-						
MX150 ASSY BLD 2X8 BK A/14	334828611	A-BLACK	GCP	PLR	M-B	-	-	-	-	-	-	-	8	SALEABLE		34950-1611	34950-1621	34951-1631	34951-1641
						9	-	-	-	-	-	-	-						
MX150 ASSY BLD 2X8 LG B/14	334828612	B-LIGHT GRAY	GCP	PLR	M-B	-	-	-	-	-	-	-	8	SALEABLE		34950-1611	34950-1621	34951-1631	34951-1641
						9	-	-	-	-	-	-	-						
MX150 ASSY BLD 2X8 BR C/14	334828613	C-BROWN	GCP	PLR	M-B	-	-	-	-	-	-	-	8	NOT RECOMMENDED	SEE PN 334828753	34950-1611	34950-1621	34951-1631	34951-1641
						9	-	-	-	-	-	-	-						
MX150 ASSY BLD 2X8 GR D/14	334828614	D-GREEN	GCP	PLR	M-B	-	-	-	-	-	-	-	8	NOT RECOMMENDED	SEE PN 334828754	34950-1611	34950-1621	34951-1631	34951-1641
						9	-	-	-	-	-	-	-						
MX150 ASSY BLD 2X8 BK A/13	334828616	A-BLACK	GCP	PLR	M-B	1	-	-	-	-	-	-	8	SALEABLE		34950-1611	34950-1621	34951-1631	34951-1641
						9	-	-	-	-	-	-	-						
MX150 ASSY BLD 2X8 LG B/13	334828617	B-LIGHT GRAY	GCP	PLR	M-B	1	-	-	-	-	-	-	8	SALEABLE		34950-1611	34950-1621	34951-1631	34951-1641
						9	-	-	-	-	-	-	-						
MX150 ASSY BLD 2X8 BR C/13	334828618	C-BROWN	GCP	PLR	M-B	1	-	-	-	-	-	-	8	NOT RECOMMENDED	SEE PN 334828755	34950-1611	34950-1621	34951-1631	34951-1641
						9	-	-	-	-	-	-	-						
MX150 ASSY BLD 2X8 GR D/13	334828619	D-GREEN	GCP	PLR	M-B	1	-	-	-	-	-	-	8	NOT RECOMMENDED	SEE PN 334828756	34950-1611	34950-1621	34951-1631	34951-1641
						9	-	-	-	-	-	-	-						
MX150 ASSY BLD 2X8 BK A/0	334828621	A-BLACK	GCP	PLR	M-B	1	2	3	4	5	6	7	8	SALEABLE		34950-1611	34950-1621	34951-1631	34951-1641
						9	10	11	12	13	14	15	16						
MX150 ASSY BLD 2X8 LG B/0	334828622	B-LIGHT GRAY	GCP	PLR	M-B	1	2	3	4	5	6	7	8	SALEABLE		34950-1611	34950-1621	34951-1631	34951-1641
						9	10	11	12	13	14	15	16						
MX150 ASSY BLD 2X8 BR C/0	334828623	C-BROWN	GCP	PLR	M-B	1	2	3	4	5	6	7	8	NOT RECOMMENDED	SEE PN 334828727	34950-1611	34950-1621	34951-1631	34951-1641
						9	10	11	12	13	14	15	16						
MX150 ASSY BLD 2X8 GR D/0	334828624	D-GREEN	GCP	PLR	M-B	1	2	3	4	5	6	7	8	NOT RECOMMENDED	SEE PN 334828728	34950-1611	34950-1621	34951-1631	34951-1641
						9	10	11	12	13	14	15	16						
MX150 ASSY BLD 2X8 BK A/15	334828626	A-BLACK	GCP	PLR	M-B	-	-	-	-	-	-	-	-	SALEABLE		34950-1611	34950-1621	34951-1631	34951-1641
						-	-	-	-	-	-	15	-						
MX150 ASSY BLD 2X8 BK A/12	334828627	A-BLACK	GCP	PLR	M-B	1	-	-	-	-	-	-	8	SALEABLE		34950-1611	34950-1621	34951-1631	34951-1641
						9	-	-	-	-	-	-	16						
MX150 ASSY BLD 2X8 LG B/12	334828628	B-LIGHT GRAY	GCP	PLR	M-B	1	-	-	-	-	-	-	8	SALEABLE		34950-1611	34950-1621	34951-1631	34951-1641
						9	-	-	-	-	-	-	16						
MX150 ASSY BLD 2X8 BR C/12	334828629	C-BROWN	GCP	PLR	M-B	1	-	-	-	-	-	-	8	NOT RECOMMENDED	SEE PN 334828757	34950-1611	34950-1621	34951-1631	34951-1641
						9	-	-	-	-	-	-	16						
MX150 ASSY BLD 2X8 GR D/12	334828630	D-GREEN	GCP	PLR	M-B	1	-	-	-	-	-	-	8	NOT RECOMMENDED	SEE PN 334828758	34950-1611	34950-1621	34951-1631	34951-1641
						9	-	-	-	-	-	-	16						
MX150 ASSY BLD 2X8 BK A/10	334828632	A-BLACK	GCP	PLR	M-B	-	-	-	4	-	-	7	8	SALEABLE		34950-1611	34950-1621	34951-1631	34951-1641
						-	-	-	12	13	14	-	-						
MX150 ASSY BLD 2X8 BK A/6	334828633	A-BLACK	GCP	PLR	M-B	-	-	3	4	5	-	-	-	SALEABLE		34950-1611	34950-1621	34951-1631	34951-1641
						-	10	11	12	13	14	15	16						
MX150 ASSY BLD 2X8 BK A/11	334828634	A-BLACK	GCP	PLR	M-B	-	-	-	-	-	-	7	8	SALEABLE		34950-1611	34950-1621	34951-1631	34951-1641
						-	-	-	12	13	14	-	-						
MX150 ASSY BLD 2X8 LG B/11	334828635	B-LIGHT GRAY	GCP	PLR	M-B	-	-	-	-	-	-	-	8	SALEABLE		34950-1611	34950-1621	34951-1631	34951-1641
						-	-	-	-	13	14	15	16						
MX150 ASSY BLD 2X8 BK A/10	334828636	A-BLACK	GCP	PLR	M-B	-	-	-	-	-	-	-	-	SALEABLE		34950-1611	34950-1621	34951-1631	34951-1641
						-	10	11	-	13	14	15	16						
MX150 ASSY BLD 2X8 BK A/12	334828637	A-BLACK	GCP	PLR	M-B	-	-	-	-	-	-	-	-	SALEABLE		34950-1611	34950-1621	34951-1631	34951-1641
						-	10	11	-	-	-	15	16						
MX150 ASSY BLD 2X8 BK A/9	334828638	A-BLACK	GCP	PLR	M-B	-	-	-	-	-	-	-	8	SALEABLE		34950-1611	34950-1621	34951-1631	34951-1641
						9	10	11	12	-	-	15	16						

molex

MX150 2X8 BLADE SEALED ASSEMBLY MAT SEAL
BOM AND PIN OUT SHEET

ASSEMBLY DESCRIPTION	ASSEMBLY PART NUMBER	COMPONENT				BLOCKED TERMINALS								STATUS	COMMENT	OPTIONAL ATTACHMENTS SOLD SEPARATELY			
		THE PRESENCE OF AN ABBREVIATION INDICATES THE PRESENCE OF THAT COMPONENT				CAVITY WITH A NUMBER INDICATES BLOCKED TERMINAL POSITION CAVITY WITHOUT A NUMBER INDICATES OPEN TERMINAL POSITION													
		HOUSING KEY/COLOR	GROMMET CAP	PLR	MAT SEAL											BACKSHELL WITH RIBS	BACKSHELL WITHOUT RIBS	90° ADAPTOR WITH RIBS	90° ADAPTOR WITHOUT RIBS
MX150 ASSY BLD 2X8 BK A/15	334828639	A-BLACK	GCP	PLR	M-B	-	-	-	-	-	-	-	-	SALEABLE		34950-1611	34950-1621	34951-1631	34951-1641
						-	-	-	-	-	-	15	-						
MX150 ASSY BLD 2X8 BK A/14	334828640	A-BLACK	GCP	PLR	M-B	-	-	-	-	5	-	-	-	SALEABLE		34950-1611	34950-1621	34951-1631	34951-1641
						-	-	-	-	-	-	-	16						
MX150 ASSY BLD 2X8 BK A/15	334828641	A-BLACK	GCP	PLR	M-B	-	-	-	-	5	-	-	-	SALEABLE		34950-1611	34950-1621	34951-1631	34951-1641
						-	-	-	-	-	-	-	-						
MX150 ASSY BLD 2X8 LG B/10	334828642	B-LIGHT GRAY	GCP	PLR	M-B	-	-	-	4	-	6	7	8	SALEABLE		34950-1611	34950-1621	34951-1631	34951-1641
						-	-	-	12	-	14	-	-						
MX150 ASSY BLD 2X8 BK A/14	334828643	A-BLACK	GCP	PLR	M-B	-	-	-	-	-	-	-	-	SALEABLE		34950-1611	34950-1621	34951-1631	34951-1641
						-	-	-	-	-	-	15	16						
MX150 ASSY BLD 2X8 LG B/15	334828644	B-LIGHT GRAY	GCP	PLR	M-B	-	-	-	4	-	-	-	-	SALEABLE		34950-1611	34950-1621	34951-1631	34951-1641
						-	-	-	-	-	-	-	-						
MX150 ASSY BLD 2X8 LG B/12	334828645	B-LIGHT GRAY	GCP	PLR	M-B	-	-	-	4	-	6	7	8	SALEABLE		34950-1611	34950-1621	34951-1631	34951-1641
						-	-	-	-	-	-	-	-						
MX150 ASSY BLD 2X8 BK A/11	334828646	A-BLACK	GCP	PLR	M-B	-	-	-	4	-	6	7	8	SALEABLE		34950-1611	34950-1621	34951-1631	34951-1641
						-	-	-	12	-	-	-	-						
MX150 ASSY BLD 2X8 BK A/15	334828647	A-BLACK	GCP	PLR	M-B	-	-	-	-	-	-	-	-	SALEABLE		34950-1611	34950-1621	34951-1631	34951-1641
						-	-	-	-	-	-	-	16						
MX150 ASSY BLD 2X8 BK A/14	334828648	A-BLACK	GCP	PLR	M-B	-	-	-	4	-	-	-	-	SALEABLE		34950-1611	34950-1621	34951-1631	34951-1641
						-	-	-	12	-	-	-	-						
MX150 ASSY BLD 2X8 LG B/15	334828649	B-LIGHT GRAY	GCP	PLR	M-B	-	-	-	-	-	-	-	-	SALEABLE		34950-1611	34950-1621	34951-1631	34951-1641
						-	-	-	-	-	-	-	16						
MX150 ASSY BLD 2X8 LG B/13	334828650	B-LIGHT GRAY	GCP	PLR	M-B	-	-	-	4	-	-	-	-	SALEABLE		34950-1611	34950-1621	34951-1631	34951-1641
						-	-	-	12	-	14	-	-						
MX150 ASSY BLD 2X8 LG B/15	334828651	B-LIGHT GRAY	GCP	PLR	M-B	-	-	-	-	-	-	-	-	SALEABLE		34950-1611	34950-1621	34951-1631	34951-1641
						-	-	-	-	-	14	-	-						
MX150 ASSY BLD 2X8 LG B/12	334828652	B-LIGHT GRAY	GCP	PLR	M-B	-	-	-	-	-	6	7	8	SALEABLE		34950-1611	34950-1621	34951-1631	34951-1641
						-	-	-	-	-	14	-	-						
MX150 ASSY BLD 2X8 BK A/14	334828653	A-BLACK	GCP	PLR	M-B	-	-	-	-	-	-	-	-	SALEABLE		34950-1611	34950-1621	34951-1631	34951-1641
						9	-	-	-	-	-	15	-						
MX150 ASSY BLD 2X8 BK A/13	334828654	A-BLACK	GCP	PLR	M-B	-	-	-	4	-	-	-	8	SALEABLE		34950-1611	34950-1621	34951-1631	34951-1641
						-	-	-	12	-	-	-	-						
MX150 ASSY BLD 2X8 LG B/12	334828655	B-LIGHT GRAY	GCP	PLR	M-B	-	-	-	4	-	-	-	8	SALEABLE		34950-1611	34950-1621	34951-1631	34951-1641
						-	-	-	12	-	14	-	-						
MX150 ASSY BLD 2X8 LG B/14	334828656	B-LIGHT GRAY	GCP	PLR	M-B	-	-	-	-	-	-	-	8	SALEABLE		34950-1611	34950-1621	34951-1631	34951-1641
						-	-	-	-	-	14	-	-						
MX150 ASSY BLD 2X8 BK A/14	334828657	A-BLACK	GCP	PLR	M-B	1	-	-	-	-	-	7	-	SALEABLE		34950-1611	34950-1621	34951-1631	34951-1641
						-	-	-	-	-	-	-	-						
MX150 ASSY BLD 2X8 LG B/9	334828658	B-LIGHT GRAY	GCP	PLR	M-B	-	2	-	4	-	6	7	8	SALEABLE		34950-1611	34950-1621	34951-1631	34951-1641
						-	-	-	12	-	14	-	-						
MX150 ASSY BLD 2X8 LG B/11	334828659	B-LIGHT GRAY	GCP	PLR	M-B	-	2	-	-	-	6	7	8	SALEABLE		34950-1611	34950-1621	34951-1631	34951-1641
						-	-	-	-	-	14	-	-						
MX150 ASSY BLD 2X8 LG B/13	334828660	B-LIGHT GRAY	GCP	PLR	M-B	-	2	-	-	-	-	-	8	SALEABLE		34950-1611	34950-1621	34951-1631	34951-1641
						-	-	-	-	-	14	-	-						
MX150 ASSY BLD 2X8 BK A/12	334828661	A-BLACK	GCP	PLR	M-B	-	2	-	4	-	-	-	8	SALEABLE		34950-1611	34950-1621	34951-1631	34951-1641
						-	-	-	12	-	-	-	-						
MX150 ASSY BLD 2X8 LG B/11	334828662	B-LIGHT GRAY	GCP	PLR	M-B	-	2	-	4	-	-	-	8	SALEABLE		34950-1611	34950-1621	34951-1631	34951-1641
						-	-	-	12	-	14	-	-						
MX150 ASSY BLD 2X8 BK A/14	334828663	A-BLACK	GCP	PLR	M-B	-	2	-	-	-	-	-	8	SALEABLE		34950-1611	34950-1621	34951-1631	34951-1641
						-	-	-	-	-	-	-	-						
MX150 ASSY BLD 2X8 BK A/10	334828664	A-BLACK	GCP	PLR	M-B	-	-	3	-	-	-	-	8	SALEABLE		34950-1611	34950-1621	34951-1631	34951-1641
						-	10	11	-	-	-	15	16						
MX150 ASSY BLD 2X8 BK A/6	334828665	A-BLACK	GCP	PLR	M-B	-	-	3	4	5	6	7	8	SALEABLE		34950-1611	34950-1621	34951-1631	34951-1641
						-	10	11	-	-	-	15	16						

molex

MX150 2X8 BLADE SEALED ASSEMBLY MAT SEAL
BOM AND PIN OUT SHEET

ASSEMBLY DESCRIPTION	ASSEMBLY PART NUMBER	COMPONENT				BLOCKED TERMINALS								STATUS	COMMENT	OPTIONAL ATTACHMENTS SOLD SEPARATELY			
		THE PRESENCE OF AN ABBREVIATION INDICATES THE PRESENCE OF THAT COMPONENT				CAVITY WITH A NUMBER INDICATES BLOCKED TERMINAL POSITION CAVITY WITHOUT A NUMBER INDICATES OPEN TERMINAL POSITION													
		HOUSING KEY/COLOR	GROMMET CAP	PLR	MAT SEAL											BACKSHELL WITH RIBS	BACKSHELL WITHOUT RIBS	90° ADAPTOR WITH RIBS	90° ADAPTOR WITHOUT RIBS
MX150 ASSY BLD 2X8 BK A/7	334828666	A-BLACK	GCP	PLR	M-B	-	2	-	-	-	6	7	8	SALEABLE		34950-1611	34950-1621	34951-1631	34951-1641
						-	10	-	-	13	14	15	16						
MX150 ASSY BLD 2X8 BK A/8	334828667	A-BLACK	GCP	PLR	M-B	-	2	-	-	5	6	-	-	SALEABLE		34950-1611	34950-1621	34951-1631	34951-1641
						-	10	-	-	13	14	15	16						
MX150 ASSY BLD 2X8 BK A/7	334828668	A-BLACK	GCP	PLR	M-B	-	2	-	-	5	6	-	-	SALEABLE		34950-1611	34950-1621	34951-1631	34951-1641
						-	10	11	-	13	14	15	16						
MX150 ASSY BLD 2X8 BK A/11	334828669	A-BLACK	GCP	PLR	M-B	-	2	-	-	-	6	-	-	SALEABLE		34950-1611	34950-1621	34951-1631	34951-1641
						-	10	-	-	13	14	-	-						
MX150 ASSY BLD 2X8 BK A/5	334828670	A-BLACK	GCP	PLR	M-B	-	2	-	4	5	6	7	8	SALEABLE		34950-1611	34950-1621	34951-1631	34951-1641
						-	10	11	12	13	14	-	-						
MX150 ASSY BLD 2X8 BK A/8	334828671	A-BLACK	GCP	PLR	M-B	-	2	-	4	5	6	-	-	SALEABLE		34950-1611	34950-1621	34951-1631	34951-1641
						-	10	-	12	13	14	-	-						
MX150 ASSY BLD 2X8 BK A/14	334828672	A-BLACK	GCP	PLR	M-B	-	-	-	4	-	-	-	8	SALEABLE		34950-1611	34950-1621	34951-1631	34951-1641
						-	-	-	-	-	-	-	-						
MX150 ASSY BLD 2X8 BK A/12	334828673	A-BLACK	GCP	PLR	M-B	-	2	-	-	-	6	7	8	SALEABLE		34950-1611	34950-1621	34951-1631	34951-1641
						-	-	-	-	-	-	-	-						
MX150 ASSY BLD 2X8 BK A/13	334828674	A-BLACK	GCP	PLR	M-B	-	2	-	-	5	6	-	-	SALEABLE		34950-1611	34950-1621	34951-1631	34951-1641
						-	-	-	-	-	-	-	-						
MX150 ASSY BLD 2X8 BK A/12	334828675	A-BLACK	GCP	PLR	M-B	-	2	-	-	5	6	-	-	SALEABLE		34950-1611	34950-1621	34951-1631	34951-1641
						-	-	11	-	-	-	-	-						
MX150 ASSY BLD 2X8 BK A/11	334828676	A-BLACK	GCP	PLR	M-B	-	-	-	-	5	6	7	8	SALEABLE		34950-1611	34950-1621	34951-1631	34951-1641
						-	-	-	-	13	-	-	-						
MX150 ASSY BLD 2X8 BK A/10	334828677	A-BLACK	GCP	PLR	M-B	-	-	-	-	5	6	7	8	SALEABLE		34950-1611	34950-1621	34951-1631	34951-1641
						-	-	11	-	13	-	-	-						
MX150 ASSY BLD 2X8 BK A/9	334828678	A-BLACK	GCP	PLR	M-B	-	-	-	-	5	6	7	8	SALEABLE		34950-1611	34950-1621	34951-1631	34951-1641
						-	-	-	12	13	14	-	-						
MX150 ASSY BLD 2X8 BK A/8	334828679	A-BLACK	GCP	PLR	M-B	-	-	-	-	5	6	7	8	SALEABLE		34950-1611	34950-1621	34951-1631	34951-1641
						-	-	11	12	13	14	-	-						
MX150 ASSY BLD 2X8 BK A/7	334828680	A-BLACK	GCP	PLR	M-B	-	-	-	-	5	6	7	8	SALEABLE		34950-1611	34950-1621	34951-1631	34951-1641
						-	-	11	12	13	14	15	-						
MX150 ASSY BLD 2X8 BK A/14	334828681	A-BLACK	GCP	PLR	M-B	-	-	-	-	-	-	7	-	SALEABLE		34950-1611	34950-1621	34951-1631	34951-1641
						-	-	-	-	-	-	15	-						
MX150 ASSY BLD 2X8 BK A/11	334828682	A-BLACK	GCP	PLR	M-B	-	-	-	4	5	6	-	-	SALEABLE		34950-1611	34950-1621	34951-1631	34951-1641
						-	-	-	-	-	-	15	16						
MX150 ASSY BLD 2X8 BK A/10	334828683	A-BLACK	GCP	PLR	M-B	-	-	3	4	5	6	-	-	SALEABLE		34950-1611	34950-1621	34951-1631	34951-1641
						-	-	-	-	-	-	15	16						
MX150 ASSY BLD 2X8 BK A/6	334828684	A-BLACK	GCP	PLR	M-B	1	2	3	4	5	6	-	8	SALEABLE		34950-1611	34950-1621	34951-1631	34951-1641
						-	-	-	-	13	-	15	16						
MX150 ASSY BLD 2X8 BK A/12	334828685	A-BLACK	GCP	PLR	M-B	-	-	-	-	-	-	-	-	SALEABLE		34950-1611	34950-1621	34951-1631	34951-1641
						-	-	-	-	13	14	15	16						
MX150 ASSY BLD 2X8 BK A/11	334828686	A-BLACK	GCP	PLR	M-B	-	-	-	-	-	-	-	8	SALEABLE		34950-1611	34950-1621	34951-1631	34951-1641
						-	-	-	-	13	14	15	16						
MX150 ASSY BLD 2X8 BK A/9	334828687	A-BLACK	GCP	PLR	M-B	-	-	-	-	-	-	7	8	SALEABLE		34950-1611	34950-1621	34951-1631	34951-1641
						-	-	11	12	13	14	15	-						
MX150 ASSY BLD 2X8 BK A/10	334828688	A-BLACK	GCP	PLR	M-B	-	-	-	-	-	-	7	8	SALEABLE		34950-1611	34950-1621	34951-1631	34951-1641
						-	-	-	12	13	14	15	-						
MX150 ASSY BLD 2X8 BK A/12	334828689	A-BLACK	GCP	PLR	M-B	-	-	-	-	-	-	7	8	SALEABLE		34950-1611	34950-1621	34951-1631	34951-1641
						-	-	11	-	13	-	-	-						
MX150 ASSY BLD 2X8 BK A/13	334828690	A-BLACK	GCP	PLR	M-B	-	-	-	-	-	-	7	8	SALEABLE		34950-1611	34950-1621	34951-1631	34951-1641
						-	-	-	-	13	-	-	-						
MX150 ASSY BLD 2X8 BK A/14	334828691	A-BLACK	GCP	PLR	M-B	-	-	-	-	5	-	-	-	SALEABLE		34950-1611	34950-1621	34951-1631	34951-1641
						-	-	-	-	13	-	-	-						
MX150 ASSY BLD 2X8 BK A/11	334828692	A-BLACK	GCP	PLR	M-B	-	2	-	-	-	-	-	-	SALEABLE		34950-1611	34950-1621	34951-1631	34951-1641
						9	10	-	-	-	-	15	16						

molex

MX150 2X8 BLADE SEALED ASSEMBLY MAT SEAL
BOM AND PIN OUT SHEET

ASSEMBLY DESCRIPTION	ASSEMBLY PART NUMBER	COMPONENT				BLOCKED TERMINALS								STATUS	COMMENT	OPTIONAL ATTACHMENTS SOLD SEPARATELY			
		THE PRESENCE OF AN ABBREVIATION INDICATES THE PRESENCE OF THAT COMPONENT				CAVITY WITH A NUMBER INDICATES BLOCKED TERMINAL POSITION CAVITY WITHOUT A NUMBER INDICATES OPEN TERMINAL POSITION													
		HOUSING KEY/COLOR	GROMMET CAP	PLR	MAT SEAL											BACKSHELL WITH RIBS	BACKSHELL WITHOUT RIBS	90° ADAPTOR WITH RIBS	90° ADAPTOR WITHOUT RIBS
MX150 ASSY BLD 2X8 BK A/13	334828693	A-BLACK	GCP	PLR	M-B	-	2	-	-	-	-	-	-	SALEABLE		34950-1611	34950-1621	34951-1631	34951-1641
						-	10	-	-	-	-	15	-						
MX150 ASSY BLD 2X8 BK A/5	334828694	A-BLACK	GCP	PLR	M-B	-	2	-	-	5	6	7	8	SALEABLE		34950-1611	34950-1621	34951-1631	34951-1641
						9	10	-	12	-	14	15	16						
MX150 ASSY BLD 2X8 BK A/7	334828695	A-BLACK	GCP	PLR	M-B	-	2	-	-	5	6	7	8	SALEABLE		34950-1611	34950-1621	34951-1631	34951-1641
						-	10	-	12	-	14	15	-						
MX150 ASSY BLD 2X8 BK A/3	334828700	A-BLACK	GCP	PLR	M-B	1	2	3	4	5	6	-	-	SALEABLE		34950-1611	34950-1621	34951-1631	34951-1641
						-	10	11	12	13	14	15	16						
MX150 ASSY BLD 2X8 BK A/4	334828701	A-BLACK	GCP	PLR	M-B	1	2	3	4	5	6	-	-	SALEABLE		34950-1611	34950-1621	34951-1631	34951-1641
						-	-	11	12	13	14	15	16						
MX150 ASSY BLD 2X8 BK A/6	334828702	A-BLACK	GCP	PLR	M-B	-	-	-	-	-	-	7	8	SALEABLE		34950-1611	34950-1621	34951-1631	34951-1641
						9	10	11	12	13	14	15	16						
MX150 ASSY BLD 2X8 BK A/7	334828703	A-BLACK	GCP	PLR	M-B	-	-	-	-	-	-	-	8	SALEABLE		34950-1611	34950-1621	34951-1631	34951-1641
						9	10	11	12	13	14	15	16						
MX150 ASSY BLD 2X8 BK A/7	334828704	A-BLACK	GCP	PLR	M-B	1	2	3	4	5	6	-	-	SALEABLE		34950-1611	34950-1621	34951-1631	34951-1641
						-	-	-	-	-	14	15	16						
MX150 ASSY BLD 2X8 BK A/9	334828705	A-BLACK	GCP	PLR	M-B	-	-	-	-	-	-	-	-	SALEABLE		34950-1611	34950-1621	34951-1631	34951-1641
						-	10	11	12	13	14	15	16						
MX150 ASSY BLD 2X8 BK A/10	334828706	A-BLACK	GCP	PLR	M-B	-	-	-	-	-	-	-	-	SALEABLE		34950-1611	34950-1621	34951-1631	34951-1641
						-	-	11	12	13	14	15	16						
MX150 ASSY BLD 2X8 BK A/12	334828707	A-BLACK	GCP	PLR	M-B	-	-	-	-	-	-	7	8	SALEABLE		34950-1611	34950-1621	34951-1631	34951-1641
						9	10	-	-	-	-	-	-						
MX150 ASSY BLD 2X8 BK A/13	334828708	A-BLACK	GCP	PLR	M-B	-	-	-	-	-	-	-	-	SALEABLE		34950-1611	34950-1621	34951-1631	34951-1641
						-	-	-	-	-	14	15	16						
MX150 ASSY BLD 2X8 BK A/11	334828709	A-BLACK	GCP	PLR	M-B	-	-	-	-	-	-	-	-	SALEABLE		34950-1611	34950-1621	34951-1631	34951-1641
						-	-	-	12	13	14	15	16						
MX150 ASSY BLD 2X8 BK A/6	334828710	A-BLACK	GCP	PLR	M-B	1	2	3	4	5	6	7	8	SALEABLE		34950-1611	34950-1621	34951-1631	34951-1641
						9	10	-	-	-	-	-	-						
MX150 ASSY BLD 2X8 LG B/2	334828711	B-LIGHT GRAY	GCP	PLR	M-B	1	2	3	4	5	6	7	8	SALEABLE		34950-1611	34950-1621	34951-1631	34951-1641
						9	10	-	12	-	14	15	16						
MX150 ASSY BLD 2X8 LG B/4	334828712	B-LIGHT GRAY	GCP	PLR	M-B	1	2	3	4	-	6	7	8	SALEABLE		34950-1611	34950-1621	34951-1631	34951-1641
						9	10	-	12	-	14	15	-						
MX150 ASSY BLD 2X8 BK A/9	334828713	A-BLACK	GCP	PLR	M-B	-	2	3	4	-	-	-	-	SALEABLE		34950-1611	34950-1621	34951-1631	34951-1641
						9	10	-	-	-	-	15	16						
MX150 ASSY BLD 2X8 BK A/3	334828714	A-BLACK	GCP	PLR	M-B	-	2	3	4	5	6	7	8	SALEABLE		34950-1611	34950-1621	34951-1631	34951-1641
						9	10	-	12	-	14	15	16						
MX150 ASSY BLD 2X8 BK A/4	334828715	A-BLACK	GCP	PLR	M-B	1	2	3	4	-	-	7	8	SALEABLE		34950-1611	34950-1621	34951-1631	34951-1641
						9	10	11	12	-	-	15	16						
MX150 ASSY BLD 2X8 BK A/6	334828716	A-BLACK	GCP	PLR	M-B	1	2	3	4	-	-	-	8	SALEABLE		34950-1611	34950-1621	34951-1631	34951-1641
						9	10	11	12	-	-	-	16						
MX150 ASSY BLD 2X8 BK A/4	334828717	A-BLACK	GCP	PLR	M-B	1	2	3	4	5	6	7	8	SALEABLE		34950-1611	34950-1621	34951-1631	34951-1641
						-	-	-	-	13	14	15	16						
MX150 ASSY BLD 2X8 BK A/12	334828718	A-BLACK	GCP	PLR	M-B	-	-	-	-	-	-	-	-	SALEABLE		34950-1611	34950-1621	34951-1631	34951-1641
						-	-	-	-	13	14	15	16						
MX150 ASSY BLD 2X8 BK A/8	334828719	A-BLACK	GCP	PLR	M-B	1	-	-	-	5	-	7	8	SALEABLE		34950-1611	34950-1621	34951-1631	34951-1641
						-	10	11	-	-	14	15	-						
MX150 ASSY BLD 2X8 BK A/14	334828720	A-BLACK	GCP	PLR	M-B	-	-	-	-	-	-	-	-	SALEABLE		34950-1611	34950-1621	34951-1631	34951-1641
						-	-	-	12	-	14	-	-						
MX150 ASSY BLD 2X8 LG B/8	334828721	B-LIGHT GRAY	GCP	PLR	M-B	-	-	-	4	-	6	7	8	SALEABLE		34950-1611	34950-1621	34951-1631	34951-1641
						-	-	11	12	13	14	-	-						
MX150 ASSY BLD 2X8 LG B/2	334828722	B-LIGHT GRAY	GCP	PLR	M-B	1	2	3	4	-	6	7	8	SALEABLE		34950-1611	34950-1621	34951-1631	34951-1641
						9	10	11	12	13	14	15	-						
MX150 ASSY BLD 2X8 BK A/5	334828723	A-BLACK	GCP	PLR	M-B	1	2	3	4	5	6	-	-	SALEABLE		34950-1611	34950-1621	34951-1631	34951-1641
						9	-	-	-	13	14	15	16						

molex

MX150 2X8 BLADE SEALED ASSEMBLY MAT SEAL
BOM AND PIN OUT SHEET

ASSEMBLY DESCRIPTION	ASSEMBLY PART NUMBER	COMPONENT				BLOCKED TERMINALS								STATUS	COMMENT	OPTIONAL ATTACHMENTS SOLD SEPARATELY			
		THE PRESENCE OF AN ABBREVIATION INDICATES THE PRESENCE OF THAT COMPONENT				CAVITY WITH A NUMBER INDICATES BLOCKED TERMINAL POSITION CAVITY WITHOUT A NUMBER INDICATES OPEN TERMINAL POSITION													
		HOUSING KEY/COLOR	GROMMET CAP	PLR	MAT SEAL											BACKSHELL WITH RIBS	BACKSHELL WITHOUT RIBS	90° ADAPTOR WITH RIBS	90° ADAPTOR WITHOUT RIBS
MX150 ASSY BLD 2X8 BK A/14	334828724	A-BLACK	GCP	PLR	M-B	-	-	-	-	-	-	-	-	SALEABLE		34950-1611	34950-1621	34951-1631	34951-1641
						-	-	-	-	-	14	15	-						
MX150 ASSY BLD 2X8 DG C/16	334828725	C-DARK GRAY	GCP	PLR	M-B	-	-	-	-	-	-	-	-	SALEABLE		34950-1611	34950-1621	34951-1631	34951-1641
						-	-	-	-	-	-	-	-						
MX150 ASSY BLD 2X8 SG D/16	334828726	D-STONE GRAY	GCP	PLR	M-B	-	-	-	-	-	-	-	-	SALEABLE		34950-1611	34950-1621	34951-1631	34951-1641
						-	-	-	-	-	-	-	-						
MX150 ASSY BLD 2X8 DG C/0	334828727	C-DARK GRAY	GCP	PLR	M-B	1	2	3	4	5	6	7	8	SALEABLE		34950-1611	34950-1621	34951-1631	34951-1641
						9	10	11	12	13	14	15	16						
MX150 ASSY BLD 2X8 SG D/0	334828728	D-STONE GRAY	GCP	PLR	M-B	1	2	3	4	5	6	7	8	SALEABLE		34950-1611	34950-1621	34951-1631	34951-1641
						9	10	11	12	13	14	15	16						
MX150 ASSY BLD 2X8 BK A/9	334828729	A-BLACK	GCP	PLR	M-B	-	-	-	-	-	-	-	8	SALEABLE		34950-1611	34950-1621	34951-1631	34951-1641
						9	-	-	12	13	14	15	16						
MX150 ASSY BLD 2X8 BK A/3	334828730	A-BLACK	GCP	PLR	M-B	-	-	-	4	5	6	7	8	SALEABLE		34950-1611	34950-1621	34951-1631	34951-1641
						9	10	11	12	13	14	15	16						
MX150 ASSY BLD 2X8 BK A/8	334828731	A-BLACK	GCP	PLR	M-B	-	-	-	-	-	-	-	-	SALEABLE		34950-1611	34950-1621	34951-1631	34951-1641
						9	10	11	12	13	14	15	16						
MX150 ASSY BLD 2X8 LG B/12	334828732	B-LIGHT GRAY	GCP	PLR	M-B	-	-	-	-	-	6	7	8	SALEABLE		34950-1611	34950-1621	34951-1631	34951-1641
						-	-	11	-	-	-	-	-						
MX150 ASSY BLD 2X8 LG B/2	334828733	B-LIGHT GRAY	GCP	PLR	M-B	1	2	3	4	5	6	-	-	SALEABLE		34950-1611	34950-1621	34951-1631	34951-1641
						9	10	11	12	13	14	15	16						
MX150 ASSY BLD 2X8 LG B/9	334828734	B-LIGHT GRAY	GCP	PLR	M-B	-	-	-	-	-	6	-	-	SALEABLE		34950-1611	34950-1621	34951-1631	34951-1641
						9	-	11	12	13	-	15	16						
MX150 ASSY BLD 2X8 BK A/10	334828735	A-BLACK	GCP	PLR	M-B	-	-	-	-	-	6	-	-	SALEABLE		34950-1611	34950-1621	34951-1631	34951-1641
						-	10	11	12	13	14	-	-						
MX150 ASSY BLD 2X8 BK A/8	334828736	A-BLACK	GCP	PLR	M-B	1	2	3	4	5	6	-	-	SALEABLE		34950-1611	34950-1621	34951-1631	34951-1641
						-	-	-	-	13	14	-	-						
MX150 ASSY BLD 2X8 BK A/5	334828737	A-BLACK	GCP	PLR	M-B	1	2	3	4	5	6	-	-	SALEABLE		34950-1611	34950-1621	34951-1631	34951-1641
						-	10	11	12	13	14	-	-						
MX150 ASSY BLD 2X8 BK A/10	334828738	A-BLACK	GCP	PLR	M-B	1	2	-	-	5	6	7	8	SALEABLE		34950-1611	34950-1621	34951-1631	34951-1641
						-	-	-	-	-	-	-	-						
MX150 ASSY BLD 2X8 BK A/12	334828739	A-BLACK	GCP	PLR	M-B	-	-	3	4	-	-	-	-	SALEABLE		34950-1611	34950-1621	34951-1631	34951-1641
						-	-	11	12	-	-	-	-						
MX150 ASSY BLD 2X8 BK A/11	334828740	A-BLACK	GCP	PLR	M-B	-	-	-	-	-	-	-	-	SALEABLE		34950-1611	34950-1621	34951-1631	34951-1641
						9	-	-	-	13	14	15	16						
MX150 ASSY BLD 2X8 BK A/6	334828741	A-BLACK	GCP	PLR	M-B	-	-	3	4	-	-	-	-	SALEABLE		34950-1611	34950-1621	34951-1631	34951-1641
						9	10	11	12	13	14	15	16						
MX150 ASSY BLD 2X8 BK A/12	334828742	A-BLACK	GCP	PLR	M-B	-	-	-	-	-	-	-	-	SALEABLE		34950-1611	34950-1621	34951-1631	34951-1641
						-	-	11	12	13	14	-	-						
MX150 ASSY BLD 2X8 BK A/14	334828743	A-BLACK	GCP	PLR	M-B	-	-	-	-	-	-	-	-	SALEABLE		34950-1611	34950-1621	34951-1631	34951-1641
						-	-	11	-	-	14	-	-						
MX150 ASSY BLD 2X8 BK A/8	334828744	A-BLACK	GCP	PLR	M-B	-	2	-	-	-	-	7	-	SALEABLE		34950-1611	34950-1621	34951-1631	34951-1641
						9	-	11	12	13	14	-	16						
MX150 ASSY BLD 2X8 BK A/11	334828745	A-BLACK	GCP	PLR	M-B	-	2	-	-	-	-	-	-	SALEABLE		34950-1611	34950-1621	34951-1631	34951-1641
						9	-	-	12	13	14	-	-						
MX150 ASSY BLD 2X8 BK A/14	334828746	A-BLACK	GCP	PLR	M-B	-	2	-	-	-	-	-	-	SALEABLE		34950-1611	34950-1621	34951-1631	34951-1641
						9	-	-	-	-	-	-	-						
MX150 ASSY BLD 2X8 BK A/12	334828747	A-BLACK	GCP	PLR	M-B	-	-	-	-	-	-	-	-	SALEABLE		34950-1611	34950-1621	34951-1631	34951-1641
						-	-	-	12	13	14	-	16						
MX150 ASSY BLD 2X8 BK A/10	334828748	A-BLACK	GCP	PLR	M-B	-	2	-	-	-	-	-	-	SALEABLE		34950-1611	34950-1621	34951-1631	34951-1641
						9	-	-	12	13	14	-	16						
MX150 ASSY BLD 2X8 BK A/9	334828749	A-BLACK	GCP	PLR	M-B	1	-	-	-	-	-	-	-	SALEABLE		34950-1611	34950-1621	34951-1631	34951-1641
						-	10	11	12	13	14	-	16						
MX150 ASSY BLD 2X8 BK A/7	334828750	A-BLACK	GCP	PLR	M-B	1	2	-	-	-	-	-	-	SALEABLE		34950-1611	34950-1621	34951-1631	34951-1641
						9	10	11	12	13	14	-	16						

molex

MX150 2X8 BLADE SEALED ASSEMBLY MAT SEAL
BOM AND PIN OUT SHEET

ASSEMBLY DESCRIPTION	ASSEMBLY PART NUMBER	COMPONENT: THE PRESENCE OF AN ABBREVIATION INDICATES THE PRESENCE OF THAT COMPONENT				BLOCKED TERMINALS: CAVITY WITH A NUMBER INDICATES BLOCKED TERMINAL POSITION, CAVITY WITHOUT A NUMBER INDICATES OPEN TERMINAL POSITION								STATUS	COMMENT	OPTIONAL ATTACHMENTS SOLD SEPARATELY			
		HOUSING KEY/COLOR	GROMMET CAP	PLR	MAT SEAL											BACKSHELL WITH RIBS	BACKSHELL WITHOUT RIBS	90^0 ADAPTOR WITH RIBS	90^0 ADAPTOR WITHOUT RIBS
MX150 ASSY BLD 2X8 DG C/15	334828751	C-DARK GRAY	GCP	PLR	M-B	-	-	-	-	-	-	-	8	SALEABLE		34950-1611	34950-1621	34951-1631	34951-1641
						-	-	-	-	-	-	-	-						
MX150 ASSY BLD 2X8 SG D/15	334828752	D-STONE GRAY	GCP	PLR	M-B	-	-	-	-	-	-	-	8	SALEABLE		34950-1611	34950-1621	34951-1631	34951-1641
						-	-	-	-	-	-	-	-						
MX150 ASSY BLD 2X8 DG C/14	334828753	C-DARK GRAY	GCP	PLR	M-B	-	-	-	-	-	-	-	8	SALEABLE		34950-1611	34950-1621	34951-1631	34951-1641
						9	-	-	-	-	-	-	-						
MX150 ASSY BLD 2X8 SG D/14	334828754	D-STONE GRAY	GCP	PLR	M-B	-	-	-	-	-	-	-	8	SALEABLE		34950-1611	34950-1621	34951-1631	34951-1641
						9	-	-	-	-	-	-	-						
MX150 ASSY BLD 2X8 DG C/13	334828755	C-DARK GRAY	GCP	PLR	M-B	1	-	-	-	-	-	-	8	SALEABLE		34950-1611	34950-1621	34951-1631	34951-1641
						9	-	-	-	-	-	-	-						
MX150 ASSY BLD 2X8 SG D/13	334828756	D-STONE GRAY	GCP	PLR	M-B	1	-	-	-	-	-	-	8	SALEABLE		34950-1611	34950-1621	34951-1631	34951-1641
						9	-	-	-	-	-	-	-						
MX150 ASSY BLD 2X8 DG C/12	334828757	C-DARK GRAY	GCP	PLR	M-B	1	-	-	-	-	-	-	8	SALEABLE		34950-1611	34950-1621	34951-1631	34951-1641
						9	-	-	-	-	-	-	16						
MX150 ASSY BLD 2X8 SG D/12	334828758	D-STONE GRAY	GCP	PLR	M-B	1	-	-	-	-	-	-	8	SALEABLE		34950-1611	34950-1621	34951-1631	34951-1641
						9	-	-	-	-	-	-	16						
MX150 ASSY BLD 2X8 BK A/3	334828759	A-BLACK	GCP	PLR	M-B	1	2	3	4	5	-	-	8	SALEABLE		34950-1611	34950-1621	34951-1631	34951-1641
						9	10	11	12	13	14	-	16						
MX150 ASSY BLD 2X8 BK A/12	334828760	A-BLACK	GCP	PLR	M-B	-	2	-	-	-	-	7	-	SALEABLE		34950-1611	34950-1621	34951-1631	34951-1641
						9	-	-	-	-	-	-	16						
MX150 ASSY BLD 2X8 BK A/13	334828761	A-BLACK	GCP	PLR	M-B	-	2	-	-	5	-	-	-	SALEABLE		34950-1611	34950-1621	34951-1631	34951-1641
						9	-	-	-	-	-	-	-						
MX150 ASSY BLD 2X8 BK A/5	334828762	A-BLACK	GCP	PLR	M-B	1	2	-	-	5	-	7	-	SALEABLE		34950-1611	34950-1621	34951-1631	34951-1641
						9	10	11	12	13	14	-	16						
MX150 ASSY BLD 2X8 BK A/14	334828763	A-BLACK	GCP	PLR	M-B	-	-	-	-	-	-	7	-	SALEABLE		34950-1611	34950-1621	34951-1631	34951-1641
						-	-	-	-	-	-	-	16						
MX150 ASSY BLD 2X8 BK A/7	334828764	A-BLACK	GCP	PLR	M-B	-	-	-	-	5	6	7	-	SALEABLE		34950-1611	34950-1621	34951-1631	34951-1641
						9	-	11	12	13	14	-	16						
MX150 ASSY BLD 2X8 BK A/8	334828765	A-BLACK	GCP	PLR	M-B	-	2	-	-	5	-	7	-	SALEABLE		34950-1611	34950-1621	34951-1631	34951-1641
						9	-	-	12	13	14	-	16						
MX150 ASSY BLD 2X8 BK A/6	334828766	A-BLACK	GCP	PLR	M-B	-	-	-	-	5	6	7	-	SALEABLE		34950-1611	34950-1621	34951-1631	34951-1641
						9	10	11	12	13	14	-	16						
MX150 ASSY BLD 2X8 BK A/11	334828767	A-BLACK	GCP	PLR	M-B	-	-	-	-	5	6	7	-	SALEABLE		34950-1611	34950-1621	34951-1631	34951-1641
						9	-	-	-	-	-	-	16						
MX150 ASSY BLD 2X8 BK A/10	334828768	A-BLACK	GCP	PLR	M-B	-	-	-	-	5	6	7	-	SALEABLE		34950-1611	34950-1621	34951-1631	34951-1641
						9	10	-	-	-	-	-	16						
MX150 ASSY BLD 2X8 BK A/7	334828769	A-BLACK	GCP	PLR	M-B	1	-	-	4	5	6	-	8	SALEABLE		34950-1611	34950-1621	34951-1631	34951-1641
						-	-	-	12	13	14	-	16						
MX150 ASSY BLD 2X8 BK A/3	334828770	A-BLACK	GCP	PLR	M-B	1	2	-	4	5	6	-	8	SALEABLE		34950-1611	34950-1621	34951-1631	34951-1641
						9	10	-	12	13	14	15	16						
MX150 ASSY BLD 2X8 BK A/7	334828771	A-BLACK	GCP	PLR	M-B	1	-	-	4	-	6	7	8	SALEABLE		34950-1611	34950-1621	34951-1631	34951-1641
						-	10	-	-	13	14	15	-						
MX150 ASSY BLD 2X8 BK A/11	334828772	A-BLACK	GCP	PLR	M-B	-	-	-	-	-	-	-	-	SALEABLE		34950-1611	34950-1621	34951-1631	34951-1641
						-	10	-	-	13	14	15	16						
MX150 ASSY BLD 2X8 BK A/8	334828773	A-BLACK	GCP	PLR	M-B	1	2	3	4	5	6	-	-	SALEABLE		34950-1611	34950-1621	34951-1631	34951-1641
						-	-	11	12	-	-	-	-						
MX150 ASSY BLD 2X8 BK A/14	334828774	A-BLACK	GCP	PLR	M-B	-	-	-	-	-	-	-	-	SALEABLE		34950-1611	34950-1621	34951-1631	34951-1641
						-	10	-	-	-	-	15	-						
MX150 ASSY BLD 2X8 BK A/12	334828775	A-BLACK	GCP	PLR	M-B	-	-	-	-	-	-	-	-	SALEABLE		34950-1611	34950-1621	34951-1631	34951-1641
						9	10	-	-	-	-	15	16						
MX150 ASSY BLD 2X8 BK A/10	334828776	A-BLACK	GCP	PLR	M-B	-	-	3	4	-	-	-	-	SALEABLE		34950-1611	34950-1621	34951-1631	34951-1641
						9	10	-	-	-	-	15	16						
MX150 ASSY BLD 2X8 YW A/16	334828777	A-YELLOW	GCP	PLR	M-B	-	-	-	-	-	-	-	-	SALEABLE		34950-1611	34950-1621	34951-1631	34951-1641
						-	-	-	-	-	-	-	-						

molex

MX150 2X8 BLADE SEALED ASSEMBLY MAT SEAL
BOM AND PIN OUT SHEET

ASSEMBLY DESCRIPTION	ASSEMBLY PART NUMBER	COMPONENT				BLOCKED TERMINALS								STATUS	COMMENT	OPTIONAL ATTACHMENTS SOLD SEPARATELY			
		THE PRESENCE OF AN ABBREVIATION INDICATES THE PRESENCE OF THAT COMPONENT				CAVITY WITH A NUMBER INDICATES BLOCKED TERMINAL POSITION CAVITY WITHOUT A NUMBER INDICATES OPEN TERMINAL POSITION													
		HOUSING KEY/COLOR	GROMMET CAP	PLR	MAT SEAL											BACKSHELL WITH RIBS	BACKSHELL WITHOUT RIBS	90° ADAPTOR WITH RIBS	90° ADAPTOR WITHOUT RIBS
MX150 ASSY BLD 2X8 BK A/14	334828778	A-BLACK	GCP	PLR	M-B	-	-	-	-	5	-	-	8	SALEABLE		34950-1611	34950-1621	34951-1631	34951-1641
						-	-	-	-	-	-	-	-						
MX150 ASSY BLD 2X8 BK A/8	334828779	A-BLACK	GCP	PLR	M-B	-	-	-	-	5	6	7	8	SALEABLE		34950-1611	34950-1621	34951-1631	34951-1641
						9	10	11	12	-	-	-	-						
MX150 ASSY BLD 2X8 BK A/10	334828780	A-BLACK	GCP	PLR	M-B	-	-	3	4	5	6	-	-	SALEABLE		34950-1611	34950-1621	34951-1631	34951-1641
						-	-	-	-	13	14	-	-						
MX150 ASSY BLD 2X8 BK A/5	334828781	A-BLACK	GCP	PLR	M-B	1	-	-	4	5	6	7	8	SALEABLE		34950-1611	34950-1621	34951-1631	34951-1641
						9	10	-	-	13	14	15	-						
MX150 ASSY BLD 2X8 BK A/5	334828782	A-BLACK	GCP	PLR	M-B	1	-	-	4	-	6	7	8	SALEABLE		34950-1611	34950-1621	34951-1631	34951-1641
						-	10	11	12	13	14	15	-						
MX150 ASSY BLD 2X8 BK A/13	334828783	A-BLACK	GCP	PLR	M-B	-	-	-	-	-	-	-	-	SALEABLE		34950-1611	34950-1621	34951-1631	34951-1641
						-	-	11	12	-	-	15	-						
MX150 ASSY BLD 2X8 BK A/15	334828784	A-BLACK	GCP	PLR	M-B	-	-	3	-	-	-	-	-	SALEABLE		34950-1611	34950-1621	34951-1631	34951-1641
						-	-	-	-	-	-	-	-						
MX150 ASSY BLD 2X8 BK A/7	334828785	A-BLACK	GCP	PLR	M-B	1	-	-	-	5	-	7	-	SALEABLE		34950-1611	34950-1621	34951-1631	34951-1641
						-	-	11	12	13	14	15	16						
MX150 ASSY BLD 2X8 BK A/6	334828786	A-BLACK	GCP	PLR	M-B	-	2	-	-	5	-	7	-	SALEABLE		34950-1611	34950-1621	34951-1631	34951-1641
						9	-	11	12	13	14	15	16						
MX150 ASSY BLD 2X8 BK A/12	334828787	A-BLACK	GCP	PLR	M-B	1	2	-	-	5	-	-	-	SALEABLE		34950-1611	34950-1621	34951-1631	34951-1641
						9	-	-	-	-	-	-	-						
MX150 ASSY BLD 2X8 BK A/6	334828788	A-BLACK	GCP	PLR	M-B	1	2	-	-	-	-	7	-	SALEABLE		34950-1611	34950-1621	34951-1631	34951-1641
						9	-	11	12	13	14	15	16						
MX150 ASSY BLD 2X8 BK A/11	334828789	A-BLACK	GCP	PLR	M-B	1	2	-	-	5	-	-	-	SALEABLE		34950-1611	34950-1621	34951-1631	34951-1641
						9	-	-	-	-	-	15	-						
MX150 ASSY BLD 2X8 BK A/5	334828790	A-BLACK	GCP	PLR	M-B	1	2	-	-	5	-	7	-	SALEABLE		34950-1611	34950-1621	34951-1631	34951-1641
						9	-	11	12	13	14	15	16						
MX150 ASSY BLD 2X8 BK A/13	334828791	A-BLACK	GCP	PLR	M-B	1	2	3	-	-	-	-	-	SALEABLE		34950-1611	34950-1621	34951-1631	34951-1641
						-	-	-	-	-	-	-	-						
MX150 ASSY BLD 2X8 BK A/13	334828792	A-BLACK	GCP	PLR	M-B	-	-	-	-	5	-	7	-	SALEABLE		34950-1611	34950-1621	34951-1631	34951-1641
						-	-	-	-	-	-	-	16						
MX150 ASSY BLD 2X8 BK A/12	334828793	A-BLACK	GCP	PLR	M-B	-	2	3	-	-	-	-	-	SALEABLE		34950-1611	34950-1621	34951-1631	34951-1641
						-	10	11	-	-	-	-	-						
MX150 ASSY BLD 2X8 BK A/9	334828794	A-BLACK	GCP	PLR	M-B	1	2	3	-	5	6	-	-	SALEABLE		34950-1611	34950-1621	34951-1631	34951-1641
						-	-	-	12	13	-	-	-						
MX150 ASSY BLD 2X8 BK A/11	334828795	A-BLACK	GCP	PLR	M-B	-	-	3	-	-	-	-	-	SALEABLE		34950-1611	34950-1621	34951-1631	34951-1641
						-	10	-	-	13	14	15	-						
MX150 ASSY BLD 2X8 BK A/11	334828796	A-BLACK	GCP	PLR	M-B	-	-	-	-	-	-	7	-	SALEABLE		34950-1611	34950-1621	34951-1631	34951-1641
						9	-	-	-	-	14	15	16						
MX150 ASSY BLD 2X8 BK A/13	334828797	A-BLACK	GCP	PLR	M-B	-	-	-	-	-	-	7	8	SALEABLE		34950-1611	34950-1621	34951-1631	34951-1641
						-	-	-	12	-	-	-	-						
MX150 ASSY BLD 2X8 BK A/8	334828798	A-BLACK	GCP	PLR	M-B	-	-	3	-	-	-	-	-	SALEABLE		34950-1611	34950-1621	34951-1631	34951-1641
						-	10	11	12	13	14	15	16						
MX150 ASSY BLD 2X8 BK A/8	334828799	A-BLACK	GCP	PLR	M-B	-	-	3	4	5	6	7	-	SALEABLE		34950-1611	34950-1621	34951-1631	34951-1641
						-	10	-	-	-	-	15	16						
MX150 ASSY BLD 2X8 BK A/11	334828800	A-BLACK	GCP	PLR	M-B	1	2	-	-	5	-	-	-	SALEABLE		34950-1611	34950-1621	34951-1631	34951-1641
						-	-	-	-	13	14	-	-						
MX150 ASSY BLD 2X8 BK A/7	334828801	A-BLACK	GCP	PLR	M-B	-	-	-	-	5	-	7	8	SALEABLE		34950-1611	34950-1621	34951-1631	34951-1641
						9	10	11	12	13	14	-	-						
MX150 ASSY BLD 2X8 BK A/13	334828802	A-BLACK	GCP	PLR	M-B	-	-	-	-	5	-	-	-	SALEABLE		34950-1611	34950-1621	34951-1631	34951-1641
						-	-	-	-	13	14	-	-						
MX150 ASSY BLD 2X8 BK A/13	334828803	A-BLACK	GCP	PLR	M-B	1	2	-	-	5	-	-	-	SALEABLE		34950-1611	34950-1621	34951-1631	34951-1641
						-	-	-	-	-	-	-	-						
MX150 ASSY BLD 2X8 BK A/5	334828804	A-BLACK	GCP	PLR	M-B	1	2	-	-	5	-	7	8	SALEABLE		34950-1611	34950-1621	34951-1631	34951-1641
						9	10	11	12	13	14	-	-						

molex

MX150 2X8 BLADE SEALED ASSEMBLY MAT SEAL
BOM AND PIN OUT SHEET

ASSEMBLY DESCRIPTION	ASSEMBLY PART NUMBER	COMPONENT				BLOCKED TERMINALS								STATUS	COMMENT	OPTIONAL ATTACHMENTS SOLD SEPARATELY			
		THE PRESENCE OF AN ABBREVIATION INDICATES THE PRESENCE OF THAT COMPONENT				CAVITY WITH A NUMBER INDICATES BLOCKED TERMINAL POSITION CAVITY WITHOUT A NUMBER INDICATES OPEN TERMINAL POSITION													
		HOUSING KEY/COLOR	GROMMET CAP	PLR	MAT SEAL											BACKSHELL WITH RIBS	BACKSHELL WITHOUT RIBS	90° ADAPTOR WITH RIBS	90° ADAPTOR WITHOUT RIBS
MX150 ASSY BLD 2X8 BK A/8	334828805	A-BLACK	GCP	PLR	M-B	-	-	-	-	-	6	-	-	SALEABLE		34950-1611	34950-1621	34951-1631	34951-1641
						-	10	11	12	13	14	15	16						
MX150 ASSY BLD 2X8 BK A/11	334828806	A-BLACK	GCP	PLR	M-B	-	-	-	-	-	6	-	-	SALEABLE		34950-1611	34950-1621	34951-1631	34951-1641
						-	-	-	-	13	14	15	16						
MX150 ASSY BLD 2X8 BK A/13	334828807	A-BLACK	GCP	PLR	M-B	-	-	-	-	-	6	-	-	SALEABLE		34950-1611	34950-1621	34951-1631	34951-1641
						-	-	-	-	13	14	-	-						
MX150 ASSY BLD 2X8 BK A/6	334828808	A-BLACK	GCP	PLR	M-B	1	2	3	4	5	6	-	-	SALEABLE		34950-1611	34950-1621	34951-1631	34951-1641
						-	-	-	-	13	14	15	16						
MX150 ASSY BLD 2X8 BK A/13	334828809	A-BLACK	GCP	PLR	M-B	1	-	-	-	-	-	-	8	SALEABLE		34950-1611	34950-1621	34951-1631	34951-1641
						-	-	-	-	-	-	15	-						
MX150 ASSY BLD 2X8 BK A/14	334828810	A-BLACK	GCP	PLR	M-B	1	-	-	-	-	-	-	-	SALEABLE		34950-1611	34950-1621	34951-1631	34951-1641
						-	-	-	-	-	-	15	-						
MX150 ASSY BLD 2X8 BK A/13	334828811	A-BLACK	GCP	PLR	M-B	-	-	-	-	-	-	-	8	SALEABLE		34950-1611	34950-1621	34951-1631	34951-1641
						-	-	-	-	13	-	-	16						
MX150 ASSY BLD 2X8 BK A/11	334828812	A-BLACK	GCP	PLR	M-B	-	-	-	-	-	-	-	8	SALEABLE		34950-1611	34950-1621	34951-1631	34951-1641
						-	-	11	12	13	-	-	16						
MX150 ASSY BLD 2X8 BK A/8	334828813	A-BLACK	GCP	PLR	M-B	-	-	-	4	5	6	7	-	SALEABLE		34950-1611	34950-1621	34951-1631	34951-1641
						-	10	-	-	-	14	15	16						
MX150 ASSY BLD 2X8 BK A/14	334828814	A-BLACK	GCP	PLR	M-B	-	-	-	-	-	-	7	-	SALEABLE		34950-1611	34950-1621	34951-1631	34951-1641
						-	10	-	-	-	-	-	-						
MX150 ASSY BLD 2X8 BK A/10	334828815	A-BLACK	GCP	PLR	M-B	1	-	3	-	5	6	-	-	SALEABLE		34950-1611	34950-1621	34951-1631	34951-1641
						-	-	-	12	13	-	-	-						
MX150 ASSY BLD 2X8 BK A/7	334828816	A-BLACK	GCP	PLR	M-B	-	-	3	-	5	6	7	-	SALEABLE		34950-1611	34950-1621	34951-1631	34951-1641
						-	10	-	-	13	14	15	16						
MX150 ASSY BLD 2X8 BK A/11	334828817	A-BLACK	GCP	PLR	M-B	-	-	-	-	-	-	-	-	SALEABLE		34950-1611	34950-1621	34951-1631	34951-1641
						-	-	11	12	-	14	15	16						
MX150 ASSY BLD 2X8 BK A/7	334828818	A-BLACK	GCP	PLR	M-B	-	-	-	-	-	6	7	8	SALEABLE		34950-1611	34950-1621	34951-1631	34951-1641
						-	10	11	12	13	14	15	-						
MX150 ASSY BLD 2X8 BK A/6	334828819	A-BLACK	GCP	PLR	M-B	1	2	-	-	-	-	7	-	SALEABLE		34950-1611	34950-1621	34951-1631	34951-1641
						9	10	11	12	13	14	-	16						
MX150 ASSY BLD 2X8 BK A/9	334828820	A-BLACK	GCP	PLR	M-B	-	2	-	-	-	-	7	-	SALEABLE		34950-1611	34950-1621	34951-1631	34951-1641
						9	-	-	12	13	14	-	16						
MX150 ASSY BLD 2X8 BK A/8	334828821	A-BLACK	GCP	PLR	M-B	-	2	3	-	-	-	7	-	SALEABLE		34950-1611	34950-1621	34951-1631	34951-1641
						9	10	11	-	-	-	15	16						
MX150 ASSY BLD 2X8 BK A/8	334828822	A-BLACK	GCP	PLR	M-B	1	-	-	4	5	6	-	8	SALEABLE		34950-1611	34950-1621	34951-1631	34951-1641
						-	-	-	12	13	14	-	-						
MX150 ASSY BLD 2X8 LG B/9	334828823	B-LIGHT GRAY	GCP	PLR	M-B	-	-	-	-	5	6	-	-	SALEABLE		34950-1611	34950-1621	34951-1631	34951-1641
						9	-	-	12	13	14	15	-						
MX150 ASSY BLD 2X8 BK A/14	334828824	A-BLACK	GCP	PLR	M-B	-	-	-	-	-	-	7	8	SALEABLE		34950-1611	34950-1621	34951-1631	34951-1641
						-	-	-	-	-	-	-	-						
MX150 ASSY BLD 2X8 BK A/11	334828825	A-BLACK	GCP	PLR	M-B	-	-	-	-	-	-	-	-	SALEABLE		34950-1611	34950-1621	34951-1631	34951-1641
						-	10	-	-	13	14	15	16						
MX150 ASSY BLD 2X8 BK A/8	334828826	A-BLACK	GCP	PLR	M-B	1	2	3	4	5	6	-	-	SALEABLE		34950-1611	34950-1621	34951-1631	34951-1641
						-	-	11	12	-	-	-	-						
MX150 ASSY BLD 2X8 BK A/10	334828827	A-BLACK	GCP	PLR	M-B	-	-	3	4	-	6	7	-	SALEABLE		34950-1611	34950-1621	34951-1631	34951-1641
						9	-	-	-	-	-	-	16						
MX150 ASSY BLD 2X8 BK A/12	334828828	A-BLACK	GCP	PLR	M-B	-	-	-	-	-	6	7	-	SALEABLE		34950-1611	34950-1621	34951-1631	34951-1641
						9	-	-	-	-	-	-	16						
MX150 ASSY BLD 2X8 BK A/7	334828829	A-BLACK	GCP	PLR	M-B	1	2	-	4	5	-	7	8	SALEABLE		34950-1611	34950-1621	34951-1631	34951-1641
						9	-	-	-	-	-	15	16						
MX150 ASSY BLD 2X8 BK A/11	334828830	A-BLACK	GCP	PLR	M-B	-	-	-	-	-	-	-	-	SALEABLE		34950-1611	34950-1621	34951-1631	34951-1641
						-	-	11	12	13	14	15	-						
MX150 ASSY BLD 2X8 BK A/13	334828831	A-BLACK	GCP	PLR	M-B	-	-	-	-	-	-	-	-	SALEABLE		34950-1611	34950-1621	34951-1631	34951-1641
						-	-	-	12	13	14	-	-						

molex

MX150 2X8 BLADE SEALED ASSEMBLY MAT SEAL
BOM AND PIN OUT SHEET

ASSEMBLY DESCRIPTION	ASSEMBLY PART NUMBER	COMPONENT				BLOCKED TERMINALS								STATUS	COMMENT	OPTIONAL ATTACHMENTS SOLD SEPARATELY			
		THE PRESENCE OF AN ABBREVIATION INDICATES THE PRESENCE OF THAT COMPONENT				CAVITY WITH A NUMBER INDICATES BLOCKED TERMINAL POSITION CAVITY WITHOUT A NUMBER INDICATES OPEN TERMINAL POSITION													
		HOUSING KEY/COLOR	GROMMET CAP	PLR	MAT SEAL											BACKSHELL WITH RIBS	BACKSHELL WITHOUT RIBS	90° ADAPTOR WITH RIBS	90° ADAPTOR WITHOUT RIBS
MX150 ASSY BLD 2X8 LG B/14	334828832	B-LIGHT GRAY	GCP	PLR	M-B	-	-	-	-	-	-	-	-	SALEABLE		34950-1611	34950-1621	34951-1631	34951-1641
						-	-	-	-	-	14	15	-						
MX150 ASSY BLD 2X8 BK A/10	334828833	A-BLACK	GCP	PLR	M-B	-	2	-	-	-	-	-	8	SALEABLE		34950-1611	34950-1621	34951-1631	34951-1641
						-	10	11	-	-	-	15	16						
MX150 ASSY BLD 2X8 BK A/13	334828834	A-BLACK	GCP	PLR	M-B	-	-	-	-	-	-	-	-	SALEABLE		34950-1611	34950-1621	34951-1631	34951-1641
						-	10	11	-	-	-	15	-						
MX150 ASSY BLD 2X8 BK A/11	334828835	A-BLACK	GCP	PLR	M-B	1	-	-	-	-	-	-	8	SALEABLE		34950-1611	34950-1621	34951-1631	34951-1641
						-	10	11	-	-	-	15	-						
MX150 ASSY BLD 2X8 BK A/5	334828836	A-BLACK	GCP	PLR	M-B	1	2	3	4	5	6	7	8	SALEABLE		34950-1611	34950-1621	34951-1631	34951-1641
						-	10	11	-	-	-	15	-						
MX150 ASSY BLD 2X8 BK A/9	334828837	A-BLACK	GCP	PLR	M-B	1	-	-	-	-	-	-	8	SALEABLE		34950-1611	34950-1621	34951-1631	34951-1641
						9	10	11	-	-	-	15	16						
MX150 ASSY BLD 2X8 BK A/11	334828838	A-BLACK	GCP	PLR	M-B	-	-	-	-	-	-	-	-	SALEABLE		34950-1611	34950-1621	34951-1631	34951-1641
						9	10	11	-	-	-	15	16						
MX150 ASSY BLD 2X8 BK A/8	334828839	A-BLACK	GCP	PLR	M-B	1	2	3	4	5	6	7	8	SALEABLE		34950-1611	34950-1621	34951-1631	34951-1641
						-	-	-	-	-	-	-	-						
MX150 ASSY BLD 2X8 BK A/15	334828840	A-BLACK	GCP	PLR	M-B	1	-	-	-	-	-	-	-	SALEABLE		34950-1611	34950-1621	34951-1631	34951-1641
						-	-	-	-	-	-	-	-						
MX150 ASSY BLD 2X8 BK A/6	334828841	A-BLACK	GCP	PLR	M-B	1	2	3	4	5	6	7	8	SALEABLE		34950-1611	34950-1621	34951-1631	34951-1641
						-	-	11	-	-	-	-	16						
MX150 ASSY BLD 2X8 BK A/11	334828842	A-BLACK	GCP	PLR	M-B	1	-	-	4	5	6	7	-	SALEABLE		34950-1611	34950-1621	34951-1631	34951-1641
						-	-	-	-	-	-	-	-						
MX150 ASSY BLD 2X8 BK A/9	334828843	A-BLACK	GCP	PLR	M-B	1	-	-	4	5	6	7	8	SALEABLE		34950-1611	34950-1621	34951-1631	34951-1641
						-	-	11	-	-	-	-	-						
MX150 ASSY BLD 2X8 BK A/14	334828844	A-BLACK	GCP	PLR	M-B	-	-	-	-	-	-	-	-	SALEABLE		34950-1611	34950-1621	34951-1631	34951-1641
						-	-	-	-	13	-	-	16						
MX150 ASSY BLD 2X8 BK A/12	334828845	A-BLACK	GCP	PLR	M-B	-	-	-	-	-	-	-	-	SALEABLE		34950-1611	34950-1621	34951-1631	34951-1641
						-	-	11	12	13	-	-	16						
MX150 ASSY BLD 2X8 BK A/13	334828846	A-BLACK	GCP	PLR	M-B	1	-	-	-	-	-	-	8	SALEABLE		34950-1611	34950-1621	34951-1631	34951-1641
						-	-	11	-	-	-	-	-						
MX150 ASSY BLD 2X8 BK A/6	334828847	A-BLACK	GCP	PLR	M-B	1	2	-	-	-	6	7	8	SALEABLE		34950-1611	34950-1621	34951-1631	34951-1641
						9	10	-	-	-	14	15	16						
MX150 ASSY BLD 2X8 BK A/8	334828848	A-BLACK	GCP	PLR	M-B	1	2	-	-	-	-	7	8	SALEABLE		34950-1611	34950-1621	34951-1631	34951-1641
						9	10	-	-	-	-	15	16						
MX150 ASSY BLD 2X8 BK A/4	334828849	A-BLACK	GCP	PLR	M-B	-	-	3	4	5	6	7	8	SALEABLE		34950-1611	34950-1621	34951-1631	34951-1641
						-	-	11	12	13	14	15	16						
MX150 ASSY BLD 2X8 BK A/10	334828850	A-BLACK	GCP	PLR	M-B	-	-	-	-	-	6	7	8	SALEABLE		34950-1611	34950-1621	34951-1631	34951-1641
						-	-	-	-	-	14	15	16						
MX150 ASSY BLD 2X8 BK A/12	334828851	A-BLACK	GCP	PLR	M-B	-	-	-	-	-	-	7	8	SALEABLE		34950-1611	34950-1621	34951-1631	34951-1641
						-	-	-	-	-	-	15	16						
MX150 ASSY BLD 2X8 BK A/9	334828852	A-BLACK	GCP	PLR	M-B	-	-	3	4	5	6	7	-	SALEABLE		34950-1611	34950-1621	34951-1631	34951-1641
						9	-	-	-	-	-	-	16						
MX150 ASSY BLD 2X8 BK A/13	334828853	A-BLACK	GCP	PLR	M-B	-	-	-	4	-	-	-	-	SALEABLE		34950-1611	34950-1621	34951-1631	34951-1641
						9	-	-	12	-	-	-	-						
MX150 ASSY BLD 2X8 BK A/12	334828854	A-BLACK	GCP	PLR	M-B	-	-	-	4	-	-	-	-	SALEABLE		34950-1611	34950-1621	34951-1631	34951-1641
						9	10	-	12	-	-	-	-						
MX150 ASSY BLD 2X8 BK A/10	334828855	A-BLACK	GCP	PLR	M-B	-	-	3	4	-	-	-	-	SALEABLE		34950-1611	34950-1621	34951-1631	34951-1641
						9	10	-	-	13	14	-	-						
MX150 ASSY BLD 2X8 BK A/8	334828856	A-BLACK	GCP	PLR	M-B	1	2	-	4	-	6	7	8	SALEABLE		34950-1611	34950-1621	34951-1631	34951-1641
						9	-	-	12	-	-	-	-						
MX150 ASSY BLD 2X8 BK A/7	334828857	A-BLACK	GCP	PLR	M-B	1	2	-	4	-	6	7	8	SALEABLE		34950-1611	34950-1621	34951-1631	34951-1641
						9	10	-	12	-	-	-	-						
MX150 ASSY BLD 2X8 BK A/4	334828858	A-BLACK	GCP	PLR	M-B	1	2	3	4	-	6	7	8	SALEABLE		34950-1611	34950-1621	34951-1631	34951-1641
						9	10	-	-	13	14	-	16						

molex

MX150 2X8 BLADE SEALED ASSEMBLY MAT SEAL
BOM AND PIN OUT SHEET

ASSEMBLY DESCRIPTION	ASSEMBLY PART NUMBER	COMPONENT				BLOCKED TERMINALS								STATUS	COMMENT	OPTIONAL ATTACHMENTS SOLD SEPARATELY			
		THE PRESENCE OF AN ABBREVIATION INDICATES THE PRESENCE OF THAT COMPONENT				CAVITY WITH A NUMBER INDICATES BLOCKED TERMINAL POSITION CAVITY WITHOUT A NUMBER INDICATES OPEN TERMINAL POSITION													
		HOUSING KEY/COLOR	GROMMET CAP	PLR	MAT SEAL											BACKSHELL WITH RIBS	BACKSHELL WITHOUT RIBS	90° ADAPTOR WITH RIBS	90° ADAPTOR WITHOUT RIBS
MX150 ASSY BLD 2X8 BK A/6	334828859	A-BLACK	GCP	PLR	M-B	-	2	-	-	5	-	7	-	SALEABLE		34950-1611	34950-1621	34951-1631	34951-1641
						9	10	11	12	13	14	-	16						
MX150 ASSY BLD 2X8 BK A/11	334828860	A-BLACK	GCP	PLR	M-B	-	-	-	-	-	-	-	-	SALEABLE		34950-1611	34950-1621	34951-1631	34951-1641
						-	10	11	12	13	-	-	16						
MX150 ASSY BLD 2X8 BK A/3	334828861	A-BLACK	GCP	PLR	M-B	1	2	3	-	5	6	7	8	SALEABLE		34950-1611	34950-1621	34951-1631	34951-1641
						-	10	11	-	13	14	15	16						
MX150 ASSY BLD 2X8 BK A/4	334828862	A-BLACK	GCP	PLR	M-B	1	2	3	-	5	6	7	8	SALEABLE		34950-1611	34950-1621	34951-1631	34951-1641
						-	-	11	-	13	14	15	16						
MX150 ASSY BLD 2X8 BK A/12	334828863	A-BLACK	GCP	PLR	M-B	-	-	-	-	-	-	7	8	SALEABLE		34950-1611	34950-1621	34951-1631	34951-1641
						-	-	-	-	13	-	-	16						
MX150 ASSY BLD 2X8 BK A/11	334828864	A-BLACK	GCP	PLR	M-B	-	-	-	-	-	-	7	8	SALEABLE		34950-1611	34950-1621	34951-1631	34951-1641
						9	-	-	-	13	-	-	16						
MX150 ASSY BLD 2X8 BK A/8	334828865	A-BLACK	GCP	PLR	M-B	-	-	-	-	-	-	7	8	SALEABLE		34950-1611	34950-1621	34951-1631	34951-1641
						9	10	11	12	13	14	-	-						
MX150 ASSY BLD 2X8 BK A/11	334828866	A-BLACK	GCP	PLR	M-B	-	-	-	-	-	6	-	-	SALEABLE		34950-1611	34950-1621	34951-1631	34951-1641
						-	-	11	12	13	14	-	-						
MX150 ASSY BLD 2X8 BK A/2	334828867	A-BLACK	GCP	PLR	M-B	1	2	3	4	5	6	7	8	SALEABLE		34950-1611	34950-1621	34951-1631	34951-1641
						-	10	11	12	13	14	15	-						
MX150 ASSY BLD 2X8 BK A/3	334828868	A-BLACK	GCP	PLR	M-B	1	2	3	4	5	6	7	8	SALEABLE		34950-1611	34950-1621	34951-1631	34951-1641
						9	10	11	-	-	-	15	16						
MX150 ASSY BLD 2X8 BK A/14	334828869	A-BLACK	GCP	PLR	M-B	-	-	3	-	-	6	-	-	SALEABLE		34950-1611	34950-1621	34951-1631	34951-1641
						-	-	-	-	-	-	-	-						
MX150 ASSY BLD 2X8 LG B/11	334828870	B-LIGHT GRAY	GCP	PLR	M-B	-	-	-	-	-	6	-	-	SALEABLE		34950-1611	34950-1621	34951-1631	34951-1641
						-	-	-	-	13	14	15	16						
MX150 ASSY BLD 2X8 LG B/11	334828871	B-LIGHT GRAY	GCP	PLR	M-B	-	-	-	-	5	-	-	-	SALEABLE		34950-1611	34950-1621	34951-1631	34951-1641
						-	-	-	-	13	14	15	16						
MX150 ASSY BLD 2X8 BK A/12	334828872	A-BLACK	GCP	PLR	M-B	-	-	3	4	-	-	-	-	SALEABLE		34950-1611	34950-1621	34951-1631	34951-1641
						-	-	-	-	-	-	15	16						
MX150 ASSY BLD 2X8 BK A/12	334828873	A-BLACK	GCP	PLR	M-B	-	-	-	-	-	-	-	-	SALEABLE		34950-1611	34950-1621	34951-1631	34951-1641
						-	10	11	-	13	-	-	16						
MX150 ASSY BLD 2X8 BK A/9	334828874	A-BLACK	GCP	PLR	M-B	-	2	-	-	-	-	7	8	SALEABLE		34950-1611	34950-1621	34951-1631	34951-1641
						-	-	-	-	13	14	15	16						
MX150 ASSY BLD 2X8 BK A/12	334828875	A-BLACK	GCP	PLR	M-B	-	-	-	-	-	6	-	-	SALEABLE		34950-1611	34950-1621	34951-1631	34951-1641
						-	10	11	12	-	-	-	-						
MX150 ASSY BLD 2X8 BK A/10	334828876	A-BLACK	GCP	PLR	M-B	1	2	3	4	5	6	-	-	SALEABLE		34950-1611	34950-1621	34951-1631	34951-1641
						-	-	-	-	-	-	-	-						
MX150 ASSY BLD 2X8 BK A/11	334828877	A-BLACK	GCP	PLR	M-B	-	2	-	-	5	-	-	-	SALEABLE		34950-1611	34950-1621	34951-1631	34951-1641
						9	-	-	12	13	-	-	-						
MX150 ASSY BLD 2X8 BK A/7	334828878	A-BLACK	GCP	PLR	M-B	-	2	-	-	-	-	7	-	SALEABLE		34950-1611	34950-1621	34951-1631	34951-1641
						9	10	11	12	13	14	-	16						
MX150 ASSY BLD 2X8 BK A/9	334828879	A-BLACK	GCP	PLR	M-B	1	2	3	4	5	-	7	8	SALEABLE		34950-1611	34950-1621	34951-1631	34951-1641
						-	-	-	-	-	-	-	-						
MX150 ASSY BLD 2X8 BK A/8	334828880	A-BLACK	GCP	PLR	M-B	-	-	-	-	-	-	7	8	SALEABLE		34950-1611	34950-1621	34951-1631	34951-1641
						9	-	11	12	-	14	15	16						
MX150 ASSY BLD 2X8 BK A/14	334828881	A-BLACK	GCP	PLR	M-B	1	2	-	-	-	-	-	-	SALEABLE		34950-1611	34950-1621	34951-1631	34951-1641
						-	-	-	-	-	-	-	-						
MX150 ASSY BLD 2X8 BK A/6	334828882	A-BLACK	GCP	PLR	M-B	-	-	3	-	-	6	-	-	SALEABLE		34950-1611	34950-1621	34951-1631	34951-1641
						9	10	11	12	13	14	15	16						
MX150 ASSY BLD 2X8 BK A/12	334828883	A-BLACK	GCP	PLR	M-B	-	-	-	-	-	6	-	8	SALEABLE		34950-1611	34950-1621	34951-1631	34951-1641
						-	-	-	-	-	-	15	16						
MX150 ASSY BLD 2X8 BK A/8	334828884	A-BLACK	GCP	PLR	M-B	-	-	-	-	-	6	-	8	SALEABLE		34950-1611	34950-1621	34951-1631	34951-1641
						9	10	11	12	-	-	15	16						
MX150 ASSY BLD 2X8 BK A/6	334828885	A-BLACK	GCP	PLR	M-B	-	-	3	4	-	6	-	8	SALEABLE		34950-1611	34950-1621	34951-1631	34951-1641
						9	10	11	12	-	-	15	16						

molex

MX150 2X8 BLADE SEALED ASSEMBLY MAT SEAL
BOM AND PIN OUT SHEET

ASSEMBLY DESCRIPTION	ASSEMBLY PART NUMBER	COMPONENT				BLOCKED TERMINALS								STATUS	COMMENT	OPTIONAL ATTACHMENTS SOLD SEPARATELY			
		THE PRESENCE OF AN ABBREVIATION INDICATES THE PRESENCE OF THAT COMPONENT				CAVITY WITH A NUMBER INDICATES BLOCKED TERMINAL POSITION CAVITY WITHOUT A NUMBER INDICATES OPEN TERMINAL POSITION													
		HOUSING KEY/COLOR	GROMMET CAP	PLR	MAT SEAL											BACKSHELL WITH RIBS	BACKSHELL WITHOUT RIBS	90° ADAPTOR WITH RIBS	90° ADAPTOR WITHOUT RIBS
MX150 ASSY BLD 2X8 BK A/10	334828886	A-BLACK	GCP	PLR	M-B	-	-	3	4	-	6	-	8	SALEABLE		34950-1611	34950-1621	34951-1631	34951-1641
						-	-	-	-	-	-	15	16						
MX150 ASSY BLD 2X8 BK A/10	334828887	A-BLACK	GCP	PLR	M-B	-	-	-	4	-	-	-	8	SALEABLE		34950-1611	34950-1621	34951-1631	34951-1641
						9	10	-	-	-	-	15	16						
MX150 ASSY BLD 2X8 BK A/12	334828888	A-BLACK	GCP	PLR	M-B	-	-	-	-	-	-	-	8	SALEABLE		34950-1611	34950-1621	34951-1631	34951-1641
						9	-	-	-	-	-	15	16						
MX150 ASSY BLD 2X8 BK A/8	334828889	A-BLACK	GCP	PLR	M-B	-	-	-	4	-	-	-	8	SALEABLE		34950-1611	34950-1621	34951-1631	34951-1641
						9	10	-	-	13	14	15	16						
MX150 ASSY BLD 2X8 BK A/10	334828890	A-BLACK	GCP	PLR	M-B	-	-	-	-	-	-	-	-	SALEABLE		34950-1611	34950-1621	34951-1631	34951-1641
						9	10	11	-	13	-	15	16						
MX150 ASSY BLD 2X8 BK A/8	334828891	A-BLACK	GCP	PLR	M-B	1	-	-	-	-	-	-	8	SALEABLE		34950-1611	34950-1621	34951-1631	34951-1641
						9	10	11	-	13	-	15	16						
MX150 ASSY BLD 2X8 BK A/2	334828892	A-BLACK	GCP	PLR	M-B	1	2	3	4	5	6	7	8	SALEABLE		34950-1611	34950-1621	34951-1631	34951-1641
						9	10	11	-	13	-	15	16						
MX150 ASSY BLD 2X8 BK A/8	334828893	A-BLACK	GCP	PLR	M-B	1	2	3	-	-	-	7	-	SALEABLE		34950-1611	34950-1621	34951-1631	34951-1641
						9	-	-	12	13	-	-	16						
MX150 ASSY BLD 2X8 BK A/10	334828894	A-BLACK	GCP	PLR	M-B	-	-	3	-	-	6	-	-	SALEABLE		34950-1611	34950-1621	34951-1631	34951-1641
						9	-	11	-	13	14	-	-						
MX150 ASSY BLD 2X8 BK A/14	334828895	A-BLACK	GCP	PLR	M-B	-	-	-	-	-	-	-	8	SALEABLE		34950-1611	34950-1621	34951-1631	34951-1641
						-	-	-	-	-	-	-	16						
MX150 ASSY BLD 2X8 BK A/11	334828896	A-BLACK	GCP	PLR	M-B	-	-	3	-	-	6	-	-	SALEABLE		34950-1611	34950-1621	34951-1631	34951-1641
						9	-	11	-	-	14	-	-						
MX150 ASSY BLD 2X8 BK A/1	334828897	A-BLACK	GCP	PLR	M-B	1	2	3	4	5	6	7	8	SALEABLE		34950-1611	34950-1621	34951-1631	34951-1641
						9	10	11	12	13	14	15	-						
MX150 ASSY BLD 2X8 BK A/2	334828898	A-BLACK	GCP	PLR	M-B	1	2	3	4	5	-	7	8	SALEABLE		34950-1611	34950-1621	34951-1631	34951-1641
						9	10	11	12	13	14	15	-						
MX150 ASSY BLD 2X8 BK A/8	334828899	A-BLACK	GCP	PLR	M-B	1	2	3	-	-	-	7	8	SALEABLE		34950-1611	34950-1621	34951-1631	34951-1641
						-	10	11	-	-	14	-	-						
MX150 ASSY BLD 2X8 BK A/10	334828900	A-BLACK	GCP	PLR	M-B	1	2	-	-	-	-	7	8	SALEABLE		34950-1611	34950-1621	34951-1631	34951-1641
						-	10	-	-	-	14	-	-						
MX150 ASSY BLD 2X8 BK A/4	334828901	A-BLACK	GCP	PLR	M-B	-	2	3	4	5	-	7	-	SALEABLE		34950-1611	34950-1621	34951-1631	34951-1641
						9	10	11	12	13	14	15	-						
MX150 ASSY BLD 2X8 BK A/10	334828902	A-BLACK	GCP	PLR	M-B	-	2	3	-	-	-	7	-	SALEABLE		34950-1611	34950-1621	34951-1631	34951-1641
						-	10	11	-	-	14	-	-						
MX150 ASSY BLD 2X8 BK A/12	334828903	A-BLACK	GCP	PLR	M-B	-	2	-	-	-	-	7	-	SALEABLE		34950-1611	34950-1621	34951-1631	34951-1641
						-	10	-	-	-	14	-	-						
MX150 ASSY BLD 2X8 BK A/4	334828904	A-BLACK	GCP	PLR	M-B	1	2	-	-	5	6	-	8	SALEABLE		34950-1611	34950-1621	34951-1631	34951-1641
						-	10	11	12	13	14	15	16						
MX150 ASSY BLD 2X8 BK A/8	334828905	A-BLACK	GCP	PLR	M-B	1	2	-	-	-	-	-	-	SALEABLE		34950-1611	34950-1621	34951-1631	34951-1641
						-	-	11	12	13	14	15	16						
MX150 ASSY BLD 2X8 BK A/8	334828906	A-BLACK	GCP	PLR	M-B	1	2	3	-	-	-	-	8	SALEABLE		34950-1611	34950-1621	34951-1631	34951-1641
						-	10	11	-	-	14	-	16						
MX150 ASSY BLD 2X8 BK A/11	334828907	A-BLACK	GCP	PLR	M-B	-	2	3	-	-	-	-	-	SALEABLE		34950-1611	34950-1621	34951-1631	34951-1641
						-	10	11	-	-	14	-	-						
MX150 ASSY BLD 2X8 BK A/13	334828908	A-BLACK	GCP	PLR	M-B	-	2	-	-	-	-	-	-	SALEABLE		34950-1611	34950-1621	34951-1631	34951-1641
						-	10	-	-	-	14	-	-						
MX150 ASSY BLD 2X8 BK A/6	334828909	A-BLACK	GCP	PLR	M-B	1	2	3	4	5	6	7	8	SALEABLE		34950-1611	34950-1621	34951-1631	34951-1641
						-	-	-	-	-	14	15	-						
MX150 ASSY BLD 2X8 BK A/14	334828910	A-BLACK	GCP	PLR	M-B	-	-	3	-	-	-	-	-	SALEABLE		34950-1611	34950-1621	34951-1631	34951-1641
						-	-	-	-	-	-	15	-						
MX150 ASSY BLD 2X8 BK A/10	334828911	A-BLACK	GCP	PLR	M-B	1	-	-	4	5	6	7	-	SALEABLE		34950-1611	34950-1621	34951-1631	34951-1641
						-	-	-	-	-	-	-	16						
MX150 ASSY BLD 2X8 BK A/8	334828912	A-BLACK	GCP	PLR	M-B	1	-	-	4	5	6	7	8	SALEABLE		34950-1611	34950-1621	34951-1631	34951-1641
						-	-	11	-	-	-	-	16						

molex

MX150 2X8 BLADE SEALED ASSEMBLY MAT SEAL
BOM AND PIN OUT SHEET

ASSEMBLY DESCRIPTION	ASSEMBLY PART NUMBER	COMPONENT: THE PRESENCE OF AN ABBREVIATION INDICATES THE PRESENCE OF THAT COMPONENT				BLOCKED TERMINALS: CAVITY WITH A NUMBER INDICATES BLOCKED TERMINAL POSITION, CAVITY WITHOUT A NUMBER INDICATES OPEN TERMINAL POSITION								STATUS	COMMENT	OPTIONAL ATTACHMENTS SOLD SEPARATELY			
		HOUSING KEY/COLOR	GROMMET CAP	PLR	MAT SEAL											BACKSHELL WITH RIBS	BACKSHELL WITHOUT RIBS	90° ADAPTOR WITH RIBS	90° ADAPTOR WITHOUT RIBS
MX150 ASSY BLD 2X8 BK A/14	334828913	A-BLACK	GCP	PLR	M-B	-	-	3	-	-	-	-	-	SALEABLE		34950-1611	34950-1621	34951-1631	34951-1641
						-	-	-	-	-	-	-	16						
MX150 ASSY BLD 2X8 LG B/3	334828914	B-LIGHT GRAY	GCP	PLR	M-B	-	-	-	4	5	6	7	8	SALEABLE		34950-1611	34950-1621	34951-1631	34951-1641
						9	10	11	12	13	14	15	16						
MX150 ASSY BLD 2X8 LG B/9	334828915	B-LIGHT GRAY	GCP	PLR	M-B	1	2	-	-	-	6	-	-	SALEABLE		34950-1611	34950-1621	34951-1631	34951-1641
						-	-	-	-	13	14	15	16						
MX150 ASSY BLD 2X8 BK A/9	334828916	A-BLACK	GCP	PLR	M-B	-	-	3	4	-	-	7	8	SALEABLE		34950-1611	34950-1621	34951-1631	34951-1641
						9	-	-	-	-	-	15	16						
MX150 ASSY BLD 2X8 BK A/11	334828917	A-BLACK	GCP	PLR	M-B	-	-	3	4	-	-	-	-	SALEABLE		34950-1611	34950-1621	34951-1631	34951-1641
						-	-	-	-	-	14	15	16						
MX150 ASSY BLD 2X8 BK A/13	334828918	A-BLACK	GCP	PLR	M-B	-	-	-	-	-	-	-	-	SALEABLE		34950-1611	34950-1621	34951-1631	34951-1641
						-	10	11	-	-	-	-	16						
MX150 ASSY BLD 2X8 BK A/6	334828919	A-BLACK	GCP	PLR	M-B	-	-	-	4	-	6	7	8	SALEABLE		34950-1611	34950-1621	34951-1631	34951-1641
						9	10	11	12	-	-	15	16						
MX150 ASSY BLD 2X8 BK A/9	334828920	A-BLACK	GCP	PLR	M-B	-	-	-	4	-	-	7	8	SALEABLE		34950-1611	34950-1621	34951-1631	34951-1641
						-	10	-	12	-	-	15	16						
MX150 ASSY BLD 2X8 BK A/11	334828921	A-BLACK	GCP	PLR	M-B	-	-	-	4	-	-	7	8	SALEABLE		34950-1611	34950-1621	34951-1631	34951-1641
						9	-	-	12	-	-	-	-						
MX150 ASSY BLD 2X8 BK A/8	334828922	A-BLACK	GCP	PLR	M-B	-	-	-	-	-	6	7	8	SALEABLE		34950-1611	34950-1621	34951-1631	34951-1641
						-	10	11	12	-	-	15	16						
MX150 ASSY BLD 2X8 BK A/10	334828923	A-BLACK	GCP	PLR	M-B	1	2	3	4	5	-	-	-	SALEABLE		34950-1611	34950-1621	34951-1631	34951-1641
						9	-	-	-	-	-	-	-						
MX150 ASSY BLD 2X8 BK A/11	334828924	A-BLACK	GCP	PLR	M-B	-	-	-	-	-	-	7	8	SALEABLE		34950-1611	34950-1621	34951-1631	34951-1641
						-	-	-	12	-	-	15	16						
MX150 ASSY BLD 2X8 BK A/11	334828925	A-BLACK	GCP	PLR	M-B	1	-	3	4	-	-	-	-	SALEABLE		34950-1611	34950-1621	34951-1631	34951-1641
						-	-	-	12	13	-	-	-						
MX150 ASSY BLD 2X8 BK A/11	334828926	A-BLACK	GCP	PLR	M-B	1	2	-	-	-	-	-	-	SALEABLE		34950-1611	34950-1621	34951-1631	34951-1641
						-	-	-	-	-	14	15	16						
MX150 ASSY BLD 2X8 BK A/8	334828927	A-BLACK	GCP	PLR	M-B	-	-	-	4	-	6	7	8	SALEABLE		34950-1611	34950-1621	34951-1631	34951-1641
						9	10	11	12	-	-	-	-						
MX150 ASSY BLD 2X8 BK A/3	334828928	A-BLACK	GCP	PLR	M-B	1	2	3	4	-	6	7	8	SALEABLE		34950-1611	34950-1621	34951-1631	34951-1641
						9	10	11	12	-	-	15	16						
MX150 ASSY BLD 2X8 BK A/6	334828929	A-BLACK	GCP	PLR	M-B	1	2	3	4	-	-	7	8	SALEABLE		34950-1611	34950-1621	34951-1631	34951-1641
						9	-	-	12	-	-	15	16						
MX150 ASSY BLD 2X8 BK A/10	334828930	A-BLACK	GCP	PLR	M-B	-	-	-	-	-	6	7	8	SALEABLE		34950-1611	34950-1621	34951-1631	34951-1641
						-	10	11	12	-	-	-	-						
MX150 ASSY BLD 2X8 BK A/5	334828931	A-BLACK	GCP	PLR	M-B	1	2	3	-	-	6	7	8	SALEABLE		34950-1611	34950-1621	34951-1631	34951-1641
						-	10	11	12	-	-	15	16						
MX150 ASSY BLD 2X8 BK A/11	334828932	A-BLACK	GCP	PLR	M-B	1	2	-	4	-	-	-	-	SALEABLE		34950-1611	34950-1621	34951-1631	34951-1641
						-	-	-	12	13	-	-	-						
MX150 ASSY BLD 2X8 BK A/12	334828933	A-BLACK	GCP	PLR	M-B	-	2	3	4	5	-	-	-	SALEABLE		34950-1611	34950-1621	34951-1631	34951-1641
						-	-	-	-	-	-	-	-						
MX150 ASSY BLD 2X8 BK A/6	334828934	A-BLACK	GCP	PLR	M-B	-	2	3	4	5	-	-	-	SALEABLE		34950-1611	34950-1621	34951-1631	34951-1641
						-	10	11	12	13	14	15	-						
MX150 ASSY BLD 2X8 BK A/13	334828935	A-BLACK	GCP	PLR	M-B	-	-	-	-	-	-	-	-	SALEABLE		34950-1611	34950-1621	34951-1631	34951-1641
						9	-	-	-	-	-	15	16						
MX150 ASSY BLD 2X8 BK A/9	334828936	A-BLACK	GCP	PLR	M-B	-	-	-	-	-	-	-	-	SALEABLE		34950-1611	34950-1621	34951-1631	34951-1641
						9	-	11	12	13	14	15	16						
MX150 ASSY BLD 2X8 BK A/6	334828937	A-BLACK	GCP	PLR	M-B	-	-	-	-	-	6	7	-	SALEABLE		34950-1611	34950-1621	34951-1631	34951-1641
						9	10	11	12	13	14	15	16						
MX150 ASSY BLD 2X8 BK A/10	334828938	A-BLACK	GCP	PLR	M-B	-	-	-	-	-	-	-	-	SALEABLE		34950-1611	34950-1621	34951-1631	34951-1641
						-	10	11	12	13	14	15	-						
MX150 ASSY BLD 2X8 BK A/9	334828939	A-BLACK	GCP	PLR	M-B	-	-	-	-	-	6	-	8	SALEABLE		34950-1611	34950-1621	34951-1631	34951-1641
						9	10	11	12	-	-	15	-						

molex

MX150 2X8 BLADE SEALED ASSEMBLY MAT SEAL
BOM AND PIN OUT SHEET

ASSEMBLY DESCRIPTION	ASSEMBLY PART NUMBER	COMPONENT: THE PRESENCE OF AN ABBREVIATION INDICATES THE PRESENCE OF THAT COMPONENT				BLOCKED TERMINALS: CAVITY WITH A NUMBER INDICATES BLOCKED TERMINAL POSITION, CAVITY WITHOUT A NUMBER INDICATES OPEN TERMINAL POSITION								STATUS	COMMENT	OPTIONAL ATTACHMENTS SOLD SEPARATELY			
		HOUSING KEY/COLOR	GROMMET CAP	PLR	MAT SEAL											BACKSHELL WITH RIBS	BACKSHELL WITHOUT RIBS	90° ADAPTOR WITH RIBS	90° ADAPTOR WITHOUT RIBS
MX150 ASSY BLD 2X8 BK A/13	334828940	A-BLACK	GCP	PLR	M-B	-	-	-	-	-	6	-	8	SALEABLE		34950-1611	34950-1621	34951-1631	34951-1641
						-	-	-	-	-	-	15	-						
MX150 ASSY BLD 2X8 BK A/6	334828941	A-BLACK	GCP	PLR	M-B	-	-	3	4	5	6	-	8	SALEABLE		34950-1611	34950-1621	34951-1631	34951-1641
						9	10	11	12	-	-	15	-						
MX150 ASSY BLD 2X8 BK A/10	334828942	A-BLACK	GCP	PLR	M-B	-	-	3	4	5	6	-	8	SALEABLE		34950-1611	34950-1621	34951-1631	34951-1641
						-	-	-	-	-	-	15	-						
MX150 ASSY BLD 2X8 BK A/9	334828943	A-BLACK	GCP	PLR	M-B	-	-	3	4	-	-	-	8	SALEABLE		34950-1611	34950-1621	34951-1631	34951-1641
						9	10	11	12	-	-	-	-						
MX150 ASSY BLD 2X8 BK A/13	334828944	A-BLACK	GCP	PLR	M-B	-	-	3	4	-	-	-	8	SALEABLE		34950-1611	34950-1621	34951-1631	34951-1641
						-	-	-	-	-	-	-	-						
MX150 ASSY BLD 2X8 BK A/11	334828945	A-BLACK	GCP	PLR	M-B	-	-	-	-	-	-	-	8	SALEABLE		34950-1611	34950-1621	34951-1631	34951-1641
						9	10	11	12	-	-	-	-						
MX150 ASSY BLD 2X8 BK A/6	334828946	A-BLACK	GCP	PLR	M-B	1	2	3	-	-	6	7	8	SALEABLE		34950-1611	34950-1621	34951-1631	34951-1641
						-	10	11	-	-	14	-	16						
MX150 ASSY BLD 2X8 BK A/9	334828947	A-BLACK	GCP	PLR	M-B	-	2	3	-	-	6	7	-	SALEABLE		34950-1611	34950-1621	34951-1631	34951-1641
						-	10	11	-	-	14	-	-						
MX150 ASSY BLD 2X8 BK A/11	334828948	A-BLACK	GCP	PLR	M-B	-	2	-	-	-	6	7	-	SALEABLE		34950-1611	34950-1621	34951-1631	34951-1641
						-	10	-	-	-	14	-	-						
MX150 ASSY BLD 2X8 BK A/10	334828949	A-BLACK	GCP	PLR	M-B	1	2	3	-	-	-	-	8	SALEABLE		34950-1611	34950-1621	34951-1631	34951-1641
						9	-	-	-	-	-	-	16						
MX150 ASSY BLD 2X8 BK A/3	334828950	A-BLACK	GCP	PLR	M-B	1	2	3	4	5	6	7	8	SALEABLE		34950-1611	34950-1621	34951-1631	34951-1641
						9	10	-	-	-	14	15	16						
MX150 ASSY BLD 2X8 BK A/12	334828951	A-BLACK	GCP	PLR	M-B	-	2	3	-	-	-	7	8	SALEABLE		34950-1611	34950-1621	34951-1631	34951-1641
						-	-	-	-	-	-	-	-						
MX150 ASSY BLD 2X8 BK A/10	334828952	A-BLACK	GCP	PLR	M-B	-	2	-	-	-	-	-	-	SALEABLE		34950-1611	34950-1621	34951-1631	34951-1641
						-	-	11	12	13	-	15	16						
MX150 ASSY BLD 2X8 BK A/13	334828953	A-BLACK	GCP	PLR	M-B	-	-	-	-	-	-	-	-	SALEABLE		34950-1611	34950-1621	34951-1631	34951-1641
						-	-	-	-	13	14	15	-						
MX150 ASSY BLD 2X8 BK A/12	334828954	A-BLACK	GCP	PLR	M-B	-	-	-	-	-	-	-	-	SALEABLE		34950-1611	34950-1621	34951-1631	34951-1641
						-	-	11	12	-	-	15	16						
MX150 ASSY BLD 2X8 BK A/11	334828955	A-BLACK	GCP	PLR	M-B	-	-	-	-	-	-	-	-	SALEABLE		34950-1611	34950-1621	34951-1631	34951-1641
						-	10	11	-	13	14	15	-						
MX150 ASSY BLD 2X8 BK A/11	334828956	A-BLACK	GCP	PLR	M-B	1	-	-	-	-	-	-	8	SALEABLE		34950-1611	34950-1621	34951-1631	34951-1641
						-	-	-	-	13	14	15	-						
MX150 ASSY BLD 2X8 BK A/9	334828957	A-BLACK	GCP	PLR	M-B	1	-	-	-	-	-	-	8	SALEABLE		34950-1611	34950-1621	34951-1631	34951-1641
						-	10	11	-	13	14	15	-						
MX150 ASSY BLD 2X8 BK A/9	334828958	A-BLACK	GCP	PLR	M-B	-	-	-	-	-	6	-	8	SALEABLE		34950-1611	34950-1621	34951-1631	34951-1641
						9	10	11	12	-	-	-	16						
MX150 ASSY BLD 2X8 BK A/9	334828959	A-BLACK	GCP	PLR	M-B	1	-	3	4	-	-	-	8	SALEABLE		34950-1611	34950-1621	34951-1631	34951-1641
						-	-	-	-	-	14	15	16						
MX150 ASSY BLD 2X8 BK A/8	334828960	A-BLACK	GCP	PLR	M-B	-	2	3	-	-	-	7	8	SALEABLE		34950-1611	34950-1621	34951-1631	34951-1641
						-	-	-	12	-	14	15	16						
MX150 ASSY BLD 2X8 BK A/6	334828961	A-BLACK	GCP	PLR	M-B	-	-	-	-	5	6	7	-	SALEABLE		34950-1611	34950-1621	34951-1631	34951-1641
						-	10	11	12	13	14	15	16						
MX150 ASSY BLD 2X8 LG B/7	334828962	B-LIGHT GRAY	GCP	PLR	M-B	-	-	-	-	-	-	7	-	SALEABLE		34950-1611	34950-1621	34951-1631	34951-1641
						9	10	11	12	13	14	15	16						
MX150 ASSY BLD 2X8 BK A/14	334828963	A-BLACK	GCP	PLR	M-B	-	-	-	-	-	-	-	-	SALEABLE		34950-1611	34950-1621	34951-1631	34951-1641
						9	-	-	-	-	-	-	16						
MX150 ASSY BLD 2X8 BK A/13	334828964	A-BLACK	GCP	PLR	M-B	1	-	-	-	5	-	-	-	SALEABLE		34950-1611	34950-1621	34951-1631	34951-1641
						-	-	-	-	-	-	-	16						
MX150 ASSY BLD 2X8 BK A/11	334828965	A-BLACK	GCP	PLR	M-B	-	-	-	-	-	6	-	-	SALEABLE		34950-1611	34950-1621	34951-1631	34951-1641
						9	10	11	12	-	-	-	-						
MX150 ASSY BLD 2X8 BK A/13	334828966	A-BLACK	GCP	PLR	M-B	-	-	-	-	-	-	7	-	SALEABLE		34950-1611	34950-1621	34951-1631	34951-1641
						-	-	-	-	13	-	15	-						

molex

MX150 2X8 BLADE SEALED ASSEMBLY MAT SEAL
BOM AND PIN OUT SHEET

ASSEMBLY DESCRIPTION	ASSEMBLY PART NUMBER	COMPONENT				BLOCKED TERMINALS								STATUS	COMMENT	OPTIONAL ATTACHMENTS SOLD SEPARATELY			
		THE PRESENCE OF AN ABBREVIATION INDICATES THE PRESENCE OF THAT COMPONENT				CAVITY WITH A NUMBER INDICATES BLOCKED TERMINAL POSITION CAVITY WITHOUT A NUMBER INDICATES OPEN TERMINAL POSITION													
		HOUSING KEY/COLOR	GROMMET CAP	PLR	MAT SEAL											BACKSHELL WITH RIBS	BACKSHELL WITHOUT RIBS	90^0 ADAPTOR WITH RIBS	90^0 ADAPTOR WITHOUT RIBS
MX150 ASSY BLD 2X8 BK A/12	334828967	A-BLACK	GCP	PLR	M-B	-	2	3	-	-	-	-	-	SALEABLE		34950-1611	34950-1621	34951-1631	34951-1641
						-	-	11	-	-	-	15	-						
MX150 ASSY BLD 2X8 BK A/15	334828968	A-BLACK	GCP	PLR	M-B	-	-	-	-	-	-	-	-	SALEABLE		34950-1611	34950-1621	34951-1631	34951-1641
						-	-	-	12	-	-	-	-						
MX150 ASSY BLD 2X8 BK A/13	334828969	A-BLACK	GCP	PLR	M-B	-	-	-	-	-	-	7	-	SALEABLE		34950-1611	34950-1621	34951-1631	34951-1641
						-	-	-	-	-	-	15	16						
MX150 ASSY BLD 2X8 BK A/10	334828970	A-BLACK	GCP	PLR	M-B	1	-	3	4	-	-	-	-	SALEABLE		34950-1611	34950-1621	34951-1631	34951-1641
						-	-	-	-	-	14	15	16						
MX150 ASSY BLD 2X8 BK A/7	334828971	A-BLACK	GCP	PLR	M-B	-	2	3	-	-	-	7	8	SALEABLE		34950-1611	34950-1621	34951-1631	34951-1641
						-	-	11	12	13	-	15	16						
MX150 ASSY BLD 2X8 BK A/5	334828972	A-BLACK	GCP	PLR	M-B	1	2	3	4	5	6	7	8	SALEABLE		34950-1611	34950-1621	34951-1631	34951-1641
						-	-	-	-	-	14	15	16						
MX150 ASSY BLD 2X8 BK A/7	334828973	A-BLACK	GCP	PLR	M-B	-	-	-	-	5	6	7	-	SALEABLE		34950-1611	34950-1621	34951-1631	34951-1641
						-	10	11	12	13	14	15	-						
MX150 ASSY BLD 2X8 BK A/12	334828974	A-BLACK	GCP	PLR	M-B	-	2	-	-	-	-	-	-	SALEABLE		34950-1611	34950-1621	34951-1631	34951-1641
						-	-	-	-	13	-	15	16						
MX150 ASSY BLD 2X8 BK A/15	334828975	A-BLACK	GCP	PLR	M-B	1	-	-	-	-	-	-	-	SALEABLE		34950-1611	34950-1621	34951-1631	34951-1641
						-	-	-	-	-	-	-	-						
MX150 ASSY BLD 2X8 BK A/7	334828976	A-BLACK	GCP	PLR	M-B	1	2	3	-	-	-	7	-	SALEABLE		34950-1611	34950-1621	34951-1631	34951-1641
						-	-	11	-	13	14	15	16						
MX150 ASSY BLD 2X8 BK A/2	334828977	A-BLACK	GCP	PLR	M-B	-	2	3	4	5	6	-	8	SALEABLE		34950-1611	34950-1621	34951-1631	34951-1641
						9	10	11	12	13	14	15	16						
MX150 ASSY BLD 2X8 BK A/6	334828978	A-BLACK	GCP	PLR	M-B	1	2	3	-	-	-	7	8	SALEABLE		34950-1611	34950-1621	34951-1631	34951-1641
						-	-	11	-	13	14	15	16						
MX150 ASSY BLD 2X8 BK A/8	334828979	A-BLACK	GCP	PLR	M-B	-	-	-	-	-	-	-	-	SALEABLE		34950-1611	34950-1621	34951-1631	34951-1641
						9	10	11	12	13	14	15	16						
MX150 ASSY BLD 2X8 BK A/6	334828980	A-BLACK	GCP	PLR	M-B	1	-	3	-	-	-	-	8	SALEABLE		34950-1611	34950-1621	34951-1631	34951-1641
						9	-	11	12	13	14	15	16						
MX150 ASSY BLD 2X8 BK A/8	334828981	A-BLACK	GCP	PLR	M-B	1	-	-	-	-	-	-	8	SALEABLE		34950-1611	34950-1621	34951-1631	34951-1641
						-	-	11	12	13	14	15	16						
MX150 ASSY BLD 2X8 BK A/10	334828982	A-BLACK	GCP	PLR	M-B	1	-	-	-	-	-	-	8	SALEABLE		34950-1611	34950-1621	34951-1631	34951-1641
						-	-	-	-	13	14	15	16						
MX150 ASSY BLD 2X8 BK A/6	334828983	A-BLACK	GCP	PLR	M-B	-	2	-	-	-	-	-	8	SALEABLE		34950-1611	34950-1621	34951-1631	34951-1641
						9	10	11	12	13	14	15	16						
MX150 ASSY BLD 2X8 BK A/12	334828984	A-BLACK	GCP	PLR	M-B	-	-	-	-	-	-	-	-	SALEABLE		34950-1611	34950-1621	34951-1631	34951-1641
						9	10	11	-	-	-	-	16						
MX150 ASSY BLD 2X8 BK A/10	334828985	A-BLACK	GCP	PLR	M-B	-	2	-	-	-	-	-	8	SALEABLE		34950-1611	34950-1621	34951-1631	34951-1641
						9	10	11	-	-	-	-	16						
MX150 ASSY BLD 2X8 BK A/12	334828986	A-BLACK	GCP	PLR	M-B	-	-	-	-	5	-	-	-	SALEABLE		34950-1611	34950-1621	34951-1631	34951-1641
						-	-	-	-	13	14	15	-						
MX150 ASSY BLD 2X8 BK A/10	334828987	A-BLACK	GCP	PLR	M-B	1	-	-	-	-	-	-	8	SALEABLE		34950-1611	34950-1621	34951-1631	34951-1641
						-	-	-	12	13	14	15	-						
MX150 ASSY BLD 2X8 BK A/12	334828988	A-BLACK	GCP	PLR	M-B	-	-	-	-	-	-	-	-	SALEABLE		34950-1611	34950-1621	34951-1631	34951-1641
						-	-	-	12	13	14	15	-						
MX150 ASSY BLD 2X8 BK A/8	334828989	A-BLACK	GCP	PLR	M-B	1	-	3	-	-	-	-	8	SALEABLE		34950-1611	34950-1621	34951-1631	34951-1641
						9	-	-	12	13	14	15	-						
MX150 ASSY BLD 2X8 BK A/4	334828990	A-BLACK	GCP	PLR	M-B	-	2	3	4	5	6	7	-	SALEABLE		34950-1611	34950-1621	34951-1631	34951-1641
						9	10	-	12	13	14	15	-						
MX150 ASSY BLD 2X8 BK A/10	334828991	A-BLACK	GCP	PLR	M-B	-	-	3	-	-	-	-	-	SALEABLE		34950-1611	34950-1621	34951-1631	34951-1641
						9	-	-	12	13	14	15	-						
MX150 ASSY BLD 2X8 BK A/2	334828992	A-BLACK	GCP	PLR	M-B	1	2	3	4	5	6	7	8	SALEABLE		34950-1611	34950-1621	34951-1631	34951-1641
						9	10	-	12	13	14	15	-						
MX150 ASSY BLD 2X8 BK A/12	334828993	A-BLACK	GCP	PLR	M-B	1	-	-	-	-	-	-	-	SALEABLE		34950-1611	34950-1621	34951-1631	34951-1641
						9	-	-	-	13	-	-	16						

molex

MX150 2X8 BLADE SEALED ASSEMBLY MAT SEAL
BOM AND PIN OUT SHEET

ASSEMBLY DESCRIPTION	ASSEMBLY PART NUMBER	COMPONENT: THE PRESENCE OF AN ABBREVIATION INDICATES THE PRESENCE OF THAT COMPONENT				BLOCKED TERMINALS: CAVITY WITH A NUMBER INDICATES BLOCKED TERMINAL POSITION, CAVITY WITHOUT A NUMBER INDICATES OPEN TERMINAL POSITION								STATUS	COMMENT	OPTIONAL ATTACHMENTS SOLD SEPARATELY			
		HOUSING KEY/COLOR	GROMMET CAP	PLR	MAT SEAL											BACKSHELL WITH RIBS	BACKSHELL WITHOUT RIBS	90^0 ADAPTOR WITH RIBS	90^0 ADAPTOR WITHOUT RIBS
MX150 ASSY BLD 2X8 LG B/11	334828994	B-LIGHT GRAY	GCP	PLR	M-B	-	-	-	-	-	6	7	8	SALEABLE		34950-1611	34950-1621	34951-1631	34951-1641
						-	-	11	-	13	-	-	-						
MX150 ASSY BLD 2X8 BK A/8	334828995	A-BLACK	GCP	PLR	M-B	1	2	3	-	-	-	7	-	SALEABLE		34950-1611	34950-1621	34951-1631	34951-1641
						-	-	11	-	13	14	15	-						
MX150 ASSY BLD 2X8 BK A/11	334828996	A-BLACK	GCP	PLR	M-B	-	-	3	-	-	-	-	-	SALEABLE		34950-1611	34950-1621	34951-1631	34951-1641
						9	-	-	-	13	14	15	-						
MX150 ASSY BLD 2X8 BK A/8	334828997	A-BLACK	GCP	PLR	M-B	1	-	3	-	-	-	-	8	SALEABLE		34950-1611	34950-1621	34951-1631	34951-1641
						9	-	-	-	13	14	15	16						
MX150 ASSY BLD 2X8 BK A/10	334828998	A-BLACK	GCP	PLR	M-B	-	-	-	-	-	-	-	-	SALEABLE		34950-1611	34950-1621	34951-1631	34951-1641
						9	-	11	12	13	14	15	-						
MX150 ASSY BLD 2X8 BK A/8	334828999	A-BLACK	GCP	PLR	M-B	-	-	-	-	-	-	-	8	SALEABLE		34950-1611	34950-1621	34951-1631	34951-1641
						-	10	11	12	13	14	15	16						
MX150 ASSY BLD 2X8 BK A/2	334829000	A-BLACK	GCP	PLR	M-B	1	2	3	4	5	6	-	-	SALEABLE		34950-1611	34950-1621	34951-1631	34951-1641
						9	10	11	12	13	14	15	16						
MX150 ASSY BLD 2X8 LG B/14	334829001	B-LIGHT GRAY	GCP	PLR	M-B	-	-	-	-	5	-	-	-	SALEABLE		34950-1611	34950-1621	34951-1631	34951-1641
						-	-	-	-	13	-	-	-						
MX150 ASSY BLD 2X8 LG B/8	334829002	B-LIGHT GRAY	GCP	PLR	M-B	-	-	-	-	5	6	7	8	SALEABLE		34950-1611	34950-1621	34951-1631	34951-1641
						-	-	-	-	13	14	15	16						
MX150 ASSY BLD 2X8 BK A/14	334829003	A-BLACK	GCP	PLR	M-B	-	-	-	-	-	-	-	-	SALEABLE		34950-1611	34950-1621	34951-1631	34951-1641
						-	-	-	12	13	-	-	-						
MX150 ASSY BLD 2X8 BK A/12	334829004	A-BLACK	GCP	PLR	M-B	-	-	-	-	-	-	7	-	SALEABLE		34950-1611	34950-1621	34951-1631	34951-1641
						-	-	-	-	-	14	15	16						
MX150 ASSY BLD 2X8 BK A/8	334829005	A-BLACK	GCP	PLR	M-B	-	-	-	-	5	6	-	-	SALEABLE		34950-1611	34950-1621	34951-1631	34951-1641
						-	-	11	12	13	14	15	16						
MX150 ASSY BLD 2X8 BK A/12	334829006	A-BLACK	GCP	PLR	M-B	-	-	3	4	5	-	7	-	SALEABLE		34950-1611	34950-1621	34951-1631	34951-1641
						-	-	-	-	-	-	-	-						
MX150 ASSY BLD 2X8 BK A/12	334829007	A-BLACK	GCP	PLR	M-B	1	-	-	-	-	-	-	-	SALEABLE		34950-1611	34950-1621	34951-1631	34951-1641
						9	10	-	-	13	-	-	-						
MX150 ASSY BLD 2X8 BK A/16	334829008	A-BLACK	GCP	PLR	M-B	-	-	-	-	-	-	-	-	SALEABLE		34950-1611	34950-1621	34951-1631	34951-1641
						-	-	-	-	-	-	-	-						
MX150 ASSY BLD 2X8 BK A/13	334829009	A-BLACK	GCP	PLR	M-B	-	-	-	-	-	-	-	8	SALEABLE		34950-1611	34950-1621	34951-1631	34951-1641
						-	-	-	-	-	-	15	16						
MX150 ASSY BLD 2X8 BK A/15	334829010	A-BLACK	GCP	PLR	M-B	-	-	-	-	-	-	-	-	SALEABLE		34950-1611	34950-1621	34951-1631	34951-1641
						-	10	-	-	-	-	-	-						
MX150 ASSY BLD 2X8 BK A/11	334829011	A-BLACK	GCP	PLR	M-B	-	-	3	4	5	-	7	-	SALEABLE		34950-1611	34950-1621	34951-1631	34951-1641
						-	-	-	-	13	-	-	-						
MX150 ASSY BLD 2X8 BK A/11	334829012	A-BLACK	GCP	PLR	M-B	-	-	-	-	5	6	-	-	SALEABLE		34950-1611	34950-1621	34951-1631	34951-1641
						-	10	11	-	-	14	-	-						
MX150 ASSY BLD 2X8 BK A/12	334829013	A-BLACK	GCP	PLR	M-B	-	-	-	4	-	-	7	-	SALEABLE		34950-1611	34950-1621	34951-1631	34951-1641
						-	-	-	-	-	14	-	16						
MX150 ASSY BLD 2X8 BK A/13	334829014	A-BLACK	GCP	PLR	M-B	1	-	-	4	-	-	-	-	SALEABLE		34950-1611	34950-1621	34951-1631	34951-1641
						-	10	-	-	-	-	-	-						
MX150 ASSY BLD 2X8 BK A/12	334829015	A-BLACK	GCP	PLR	M-B	-	-	-	-	-	-	-	-	SALEABLE		34950-1611	34950-1621	34951-1631	34951-1641
						-	-	-	-	13	14	15	16						
MX150 ASSY BLD 2X8 LG B/6	334829016	B-LIGHT GRAY	GCP	PLR	M-B	-	-	3	4	5	6	7	-	SALEABLE		34950-1611	34950-1621	34951-1631	34951-1641
						-	10	11	12	13	-	-	16						
MX150 ASSY BLD 2X8 LG B/10	334829017	B-LIGHT GRAY	GCP	PLR	M-B	1	-	-	4	5	-	-	8	SALEABLE		34950-1611	34950-1621	34951-1631	34951-1641
						-	-	-	-	13	14	-	-						
MX150 ASSY BLD 2X8 BK A/10	334829018	A-BLACK	GCP	PLR	M-B	-	-	-	4	-	6	7	8	SALEABLE		34950-1611	34950-1621	34951-1631	34951-1641
						9	10	-	-	-	-	-	-						
MX150 ASSY BLD 2X8 BK A/12	334829019	A-BLACK	GCP	PLR	M-B	-	-	-	-	-	6	7	8	SALEABLE		34950-1611	34950-1621	34951-1631	34951-1641
						-	10	-	-	-	-	-	-						
MX150 ASSY BLD 2X8 LG B/9	334829020	B-LIGHT GRAY	GCP	PLR	M-B	1	-	3	-	-	6	7	8	SALEABLE		34950-1611	34950-1621	34951-1631	34951-1641
						-	-	-	-	-	-	15	16						

TABLE OF CONTENTS

SHEET NO.	SHEET DESCRIPTION
1	NOTES AND BOM
2	CONFIGURATIONS
3-4	KEY CONFIGURATIONS
5	BLADE SEALED ASSEMBLY
6	SYSTEM PACKAGING
7	BACKSHELL NOTES
8	BACKSHELL
9	BACKSHELL CONFIGURATIONS

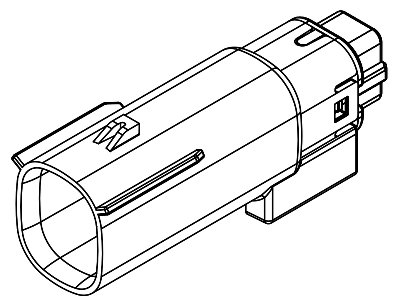

2X2

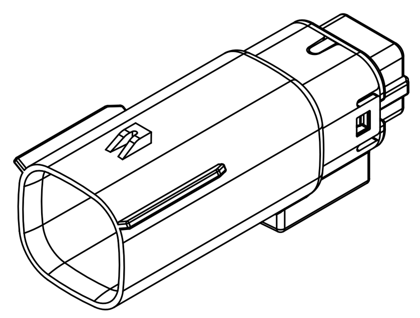

2X3

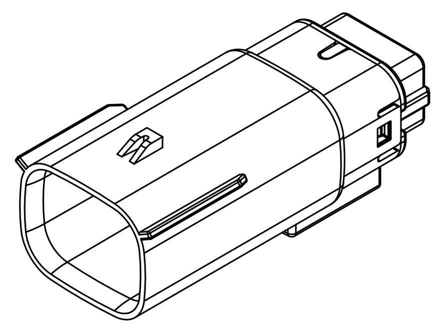

2X4

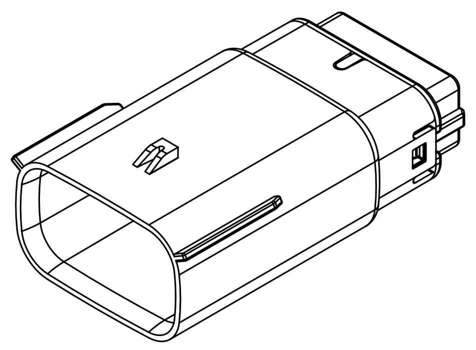

2X6

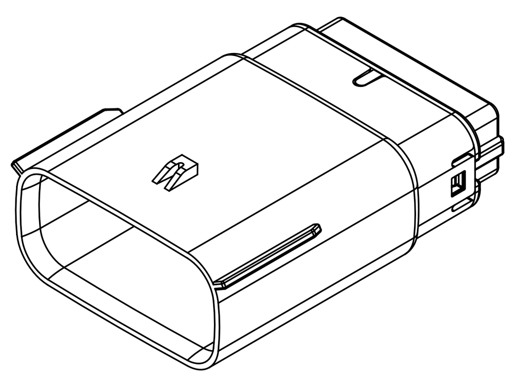

2X8

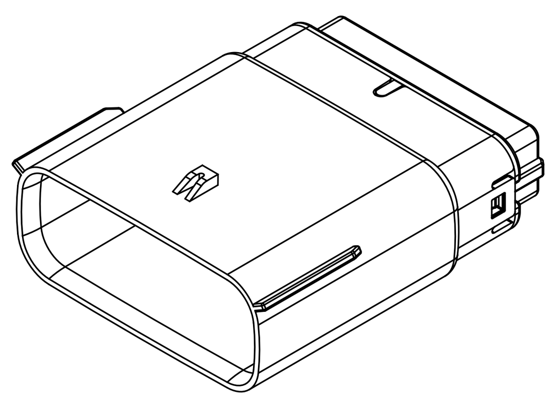

2X10

NOTES: VALID UNLESS OTHERWISE SPECIFIED

1. GENERAL:
a. APPLICATION SPECIFICATION SEE: AS-33472-100
-CONTAINS: PRODUCT INTRODUCTION, PRODUCT SUMMARY, CONNECTOR ASSEMBLY, PACKAGING INFORMATION, CONNECTOR MATING, SERVICE INSTRUCTIONS, ELECTRICAL CONTINUITY CHECKING, CRIMPING, AND TROUBLESHOOTING.
-DESIGNED TO MATE WITH RECEPTACLE SEALED ASSEMBLY AS SPECIFIED IN THE MATING CONNECTOR DRAWINGS CHART.
*DENOTES DRAWINGS THAT CAN BE ACCESSED AT <http://ewcap.uscarteams.org/>.
-ASSEMBLY SHIPPED WITH PLR IN PRE-LOCK POSITION (SEE PLR PRE-LOCK VIEW SHEET 5).

b. PRODUCT SPECIFICATION SEE:
-STANDARD CONFIGURATION: PS-33472-000
-UL V0 CONFIGURATION: TBD
CONTAINS: PRODUCT INTRODUCTION, PRODUCT SUMMARY, RATINGS (CURRENT, TEMPERATURE, SEALING, AND FLAMMABILITY), TERMINALS, WIRE DIAMETER RANGE, PRODUCT VALIDATION, AND PRODUCT DEVIATIONS.
E3 c. PACKAGING SPECIFICATION PER MOLEX DRAWING: PK-31300-903
d. PARTS MUST BE IN COMPLIANCE TO MOLEX CHEMICAL SUBSTANCES FOR PRODUCTS AND PACKAGING SPECIFICATION: QEHS-699000-300
e. DATA MUST BE SUBMITTED UNDER THE MOLEX PART NUMBER TO IMDS (COMPANY ID#13255)

2. DESIGN - MATERIALS:
a. FOR BILL OF MATERIALS: SEE BOM CHART

3. DESIGN - GEOMETRY:
a. THE 3-D CAD DATA IS BASIC (WITHOUT TOLERANCE) AND MASTER FOR THIS PART WITH THE EXCEPTION OF UNDERLINED DIMENSIONS. DIMENSIONAL INFORMATION NOT SHOWN ON THIS DRAWING IS DEFINED BY THE DATA FILE AT ITS LATEST REVISION.
b. GEOMETRIC DIMENSIONS AND TOLERANCES PER ASME Y14.5M-2009
c. EDGES AND UNDIMENSIONED DETAILS PER ISO13715
d. CORNERS SHOWN AS SHARP TO BE R 0.2 MAX.
e. LETTERING SHALL BE 0.15 MAX RAISED IN 0.25 MAX RECESS PAD. THIS INCLUDES RECYCLING CODE, CAVITY ID, VENDOR IDENTIFICATION, AND CUSTOMER MATERIAL NUMBER.
f. VISUAL DEFECTS SHALL MEET COSMETIC STANDARD PS-45499-002 (Class B).
g. LASER MARKING:
1. PART NUMBER
2. DAY OF THE YEAR
3. SHIFT
4. YEAR
FOR ADDITIONAL INFORMATION SEE SECTION 5 UNDER PROCEDURES IN ES-34735-008.

E3

BILL OF MATERIALS (BOM)

DESCRIPTION	DRAWING NO.
UL V0 VERSION	SD-160084-0002
STANDARD 2X2	334820402
STANDARD 2X3	334820602
STANDARD 2X4	334820802
STANDARD 2X6	334821202
STANDARD 2X8	334821602
STANDARD 2X10	334822002

MATING CONNECTOR DRAWINGS

DESCRIPTION	MOLEX INLINE
2X2	SD-33472-0001
2X3	SD-33472-0001
2X4	SD-33472-0001
2X6	SD-33472-0001
2X8	SD-33472-0001
2X10	SD-33472-0001

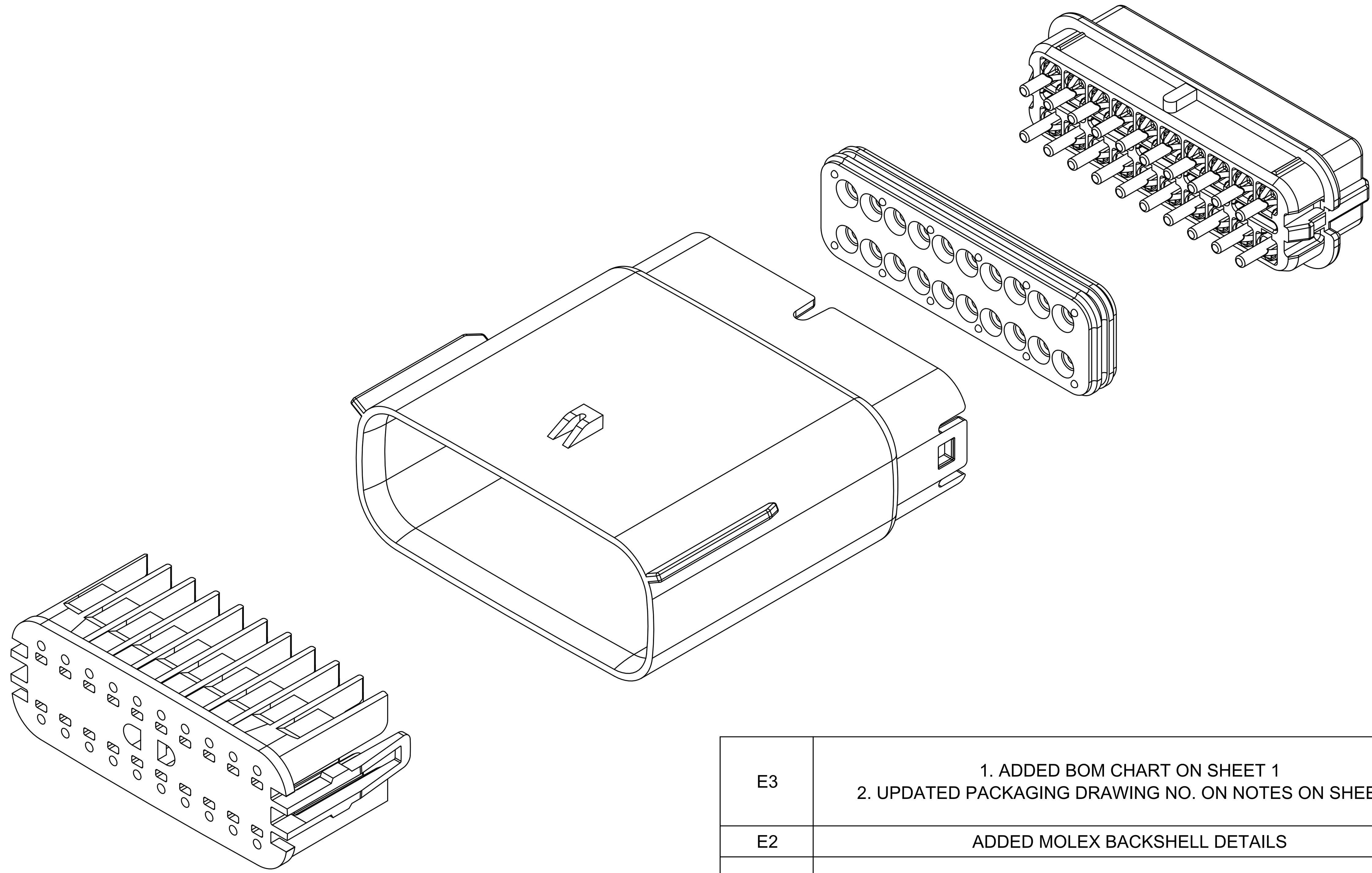

REV	REV DESCRIPTION
E3	1. ADDED BOM CHART ON SHEET 1 2. UPDATED PACKAGING DRAWING NO. ON NOTES ON SHEET 1
E2	ADDED MOLEX BACKSHELL DETAILS
E1	MIGRATED FROM COCREATE AND IMPORTED DXF FILES
E	ADDED CHARTED DIMENSIONS FOR 2X2, 2X4, 2X6 AND 2X8 WITH CLIPSLOT
D	MINOR GEOMETRY CHANGE FOR UL V0
C3	ADD 2X4
C2	ADD 2X3
C1	ADD UL V0 CONFIGURATIONS
C	ADD 2X8
B1	ADD 2X6 BACKSHELL INFO
B	ADD 2X6
A	INITIAL RELEASE

INSPECTION NUMBER LOG
LAST NUMBER: 9
ADDED:
REMOVED:

THIS DRAWING CONTAINS INFORMATION THAT IS PROPRIETARY TO MOLEX ELECTRONIC TECHNOLOGIES, LLC AND SHOULD NOT BE USED WITHOUT WRITTEN PERMISSION

FUNCTIONAL SYMBOLS
FA = 0
FC = 0
FP = 0
DIVISIONAL SYMBOLS

DIMENSION UNITS	SCALE
mm	1.5:1
GENERAL TOLERANCES (UNLESS SPECIFIED)	
ANGULAR TOL	± 1°
4 PLACES	±
3 PLACES	±
2 PLACES	± 0.100
1 PLACE	± 0.20
0 PLACES	±

DRAFT WHERE APPLICABLE MUST REMAIN WITHIN DIMENSIONS

CURRENT REV DESC:

STATUS: Production
DRWN: Yann Chen 2023-09-26
CHK'D: Yu Chao Fu 2023-09-26
APPR: Elvis Song 2023-09-27

THIRD ANGLE PROJECTION | DRAWING: A1-SIZE | SERIES: 33482

molex

MX150 BLADE
DUAL ROW SEALED ASSEMBLY

PRODUCT SALES DRAWING

DOCUMENT NUMBER	DOC TYPE	DOC PART	REVISION
SD-33482-0001	PSD	001	E3

MATERIAL NUMBER	CUSTOMER	SHEET NUMBER
	GENERAL MARKET	1 OF 11

SHEET DESCRIPTION
CONFIGURATIONS

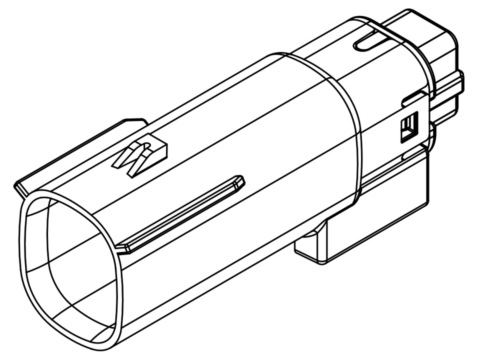

2X2 - STANDARD (STD)

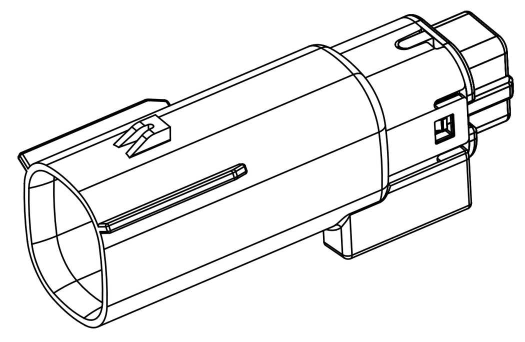

2X2 - UL V0*

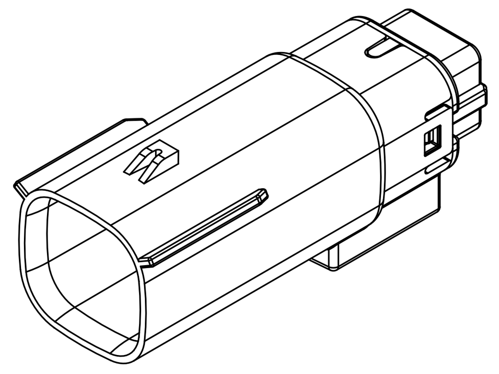

2X3 - STANDARD (STD)

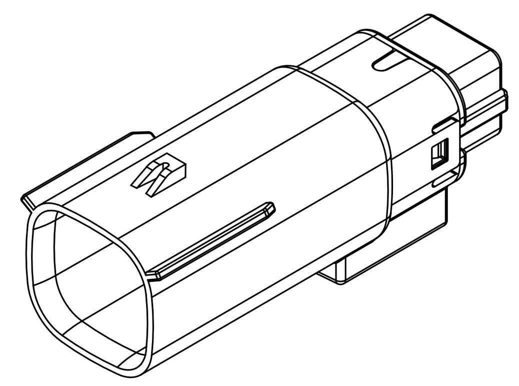

2X3 - LENGTHENED

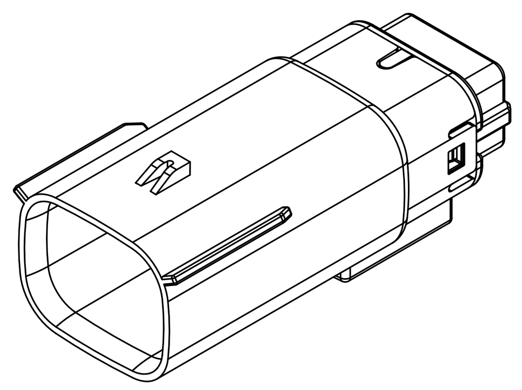

2X4 - STANDARD (STD)

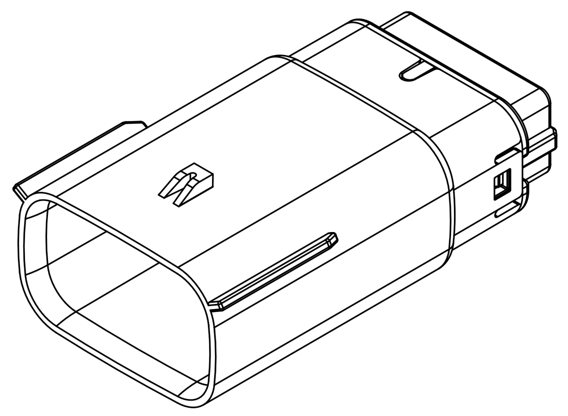

2X6 - STANDARD (STD)

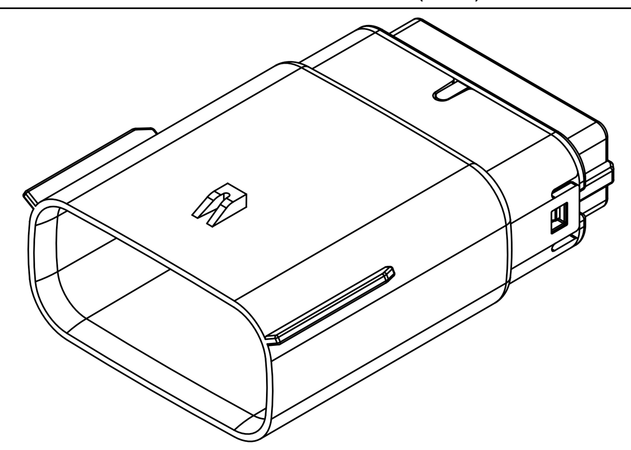

2X8 - STANDARD (STD)

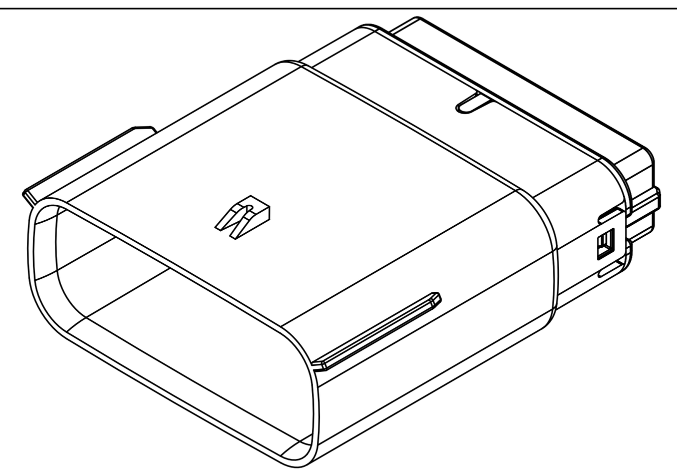

2X10 - STANDARD (STD)

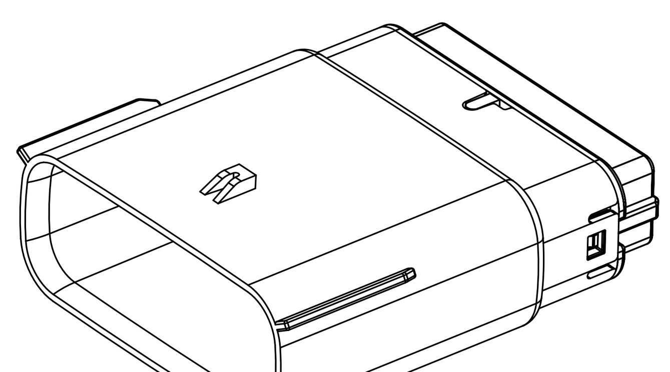

2X10 - UL V0*

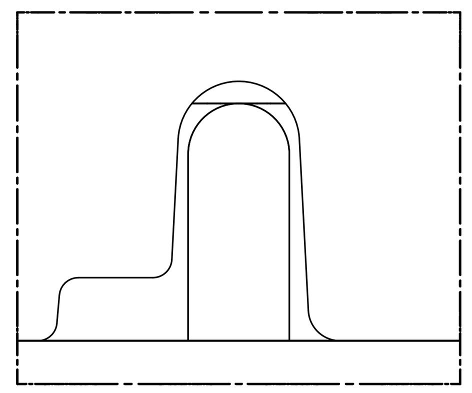

UL V0 UNIQUE FEATURE
Partial1
SCALE 10:1

* MINOR GEOMETRY CHANGE THAN STANDARD CONFIGURATION.
SEE NOTE 2a FOR MORE INFORMATION

THIS DRAWING CONTAINS INFORMATION THAT IS PROPRIETARY TO MOLEX ELECTRONIC TECHNOLOGIES, LLC AND SHOULD NOT BE USED WITHOUT WRITTEN PERMISSION

FUNCTIONAL SYMBOLS: FA = 0; FC = 0; FP = 0
DIVISIONAL SYMBOLS

DIMENSION UNITS	SCALE
mm	1.5:1

GENERAL TOLERANCES (UNLESS SPECIFIED)

ANGULAR TOL	± 1°
4 PLACES	±
3 PLACES	±
2 PLACES	± 0.100
1 PLACE	± 0.20
0 PLACES	±

DRAFT WHERE APPLICABLE MUST REMAIN WITHIN DIMENSIONS

CURRENT REV DESC:

STATUS: Production
DRWN: Yann Chen 2023-09-26
CHK'D: Yu Chao Fu 2023-09-26
APPR: Elvis Song 2023-09-27

THIRD ANGLE PROJECTION | DRAWING: A1-SIZE | SERIES: 33482

molex

MX150 BLADE
DUAL ROW SEALED ASSEMBLY

PRODUCT SALES DRAWING

DOCUMENT NUMBER	DOC TYPE	DOC PART	REVISION
SD-33482-0001	PSD	001	E3

MATERIAL NUMBER	CUSTOMER	SHEET NUMBER
	GENERAL MARKET	2 OF 11

SHEET DESCRIPTION
KEY CONFIGURATIONS

2X2

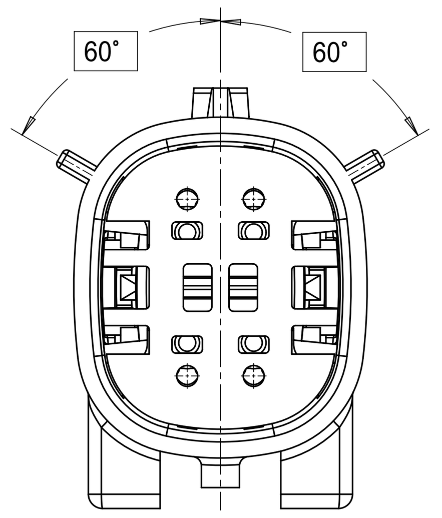

KEY A

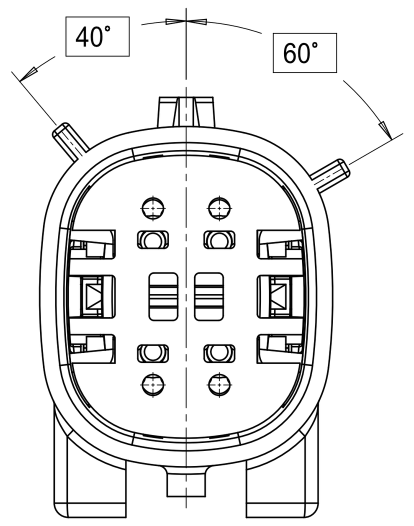

KEY B

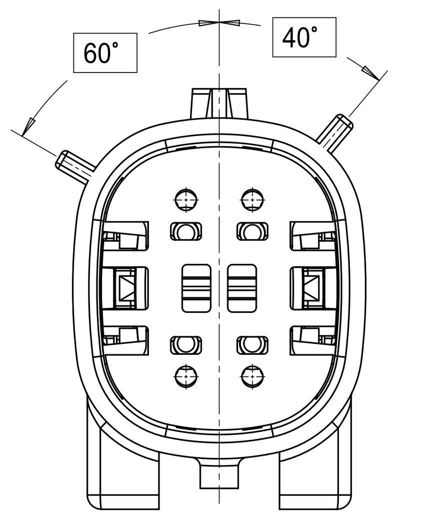

KEY C

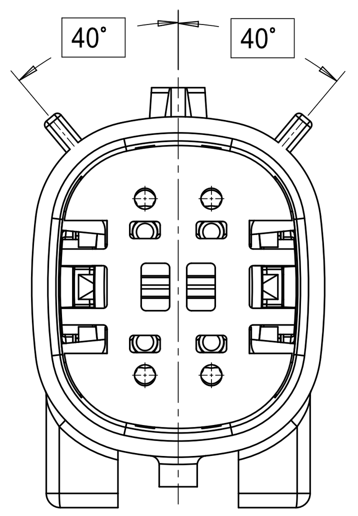

KEY D

2X3

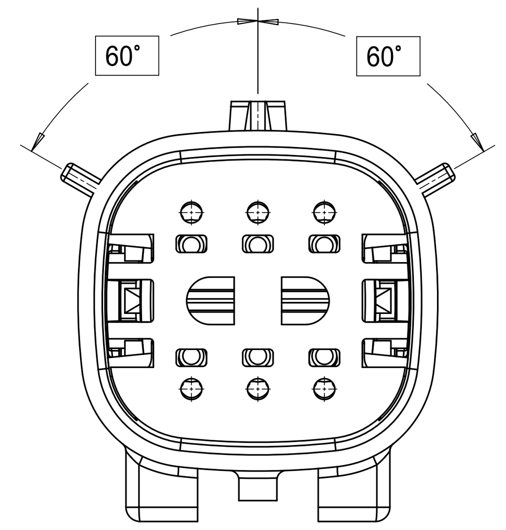

KEY A

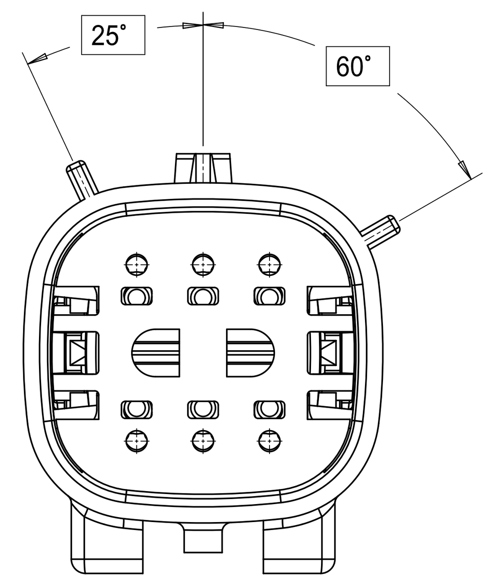

KEY B

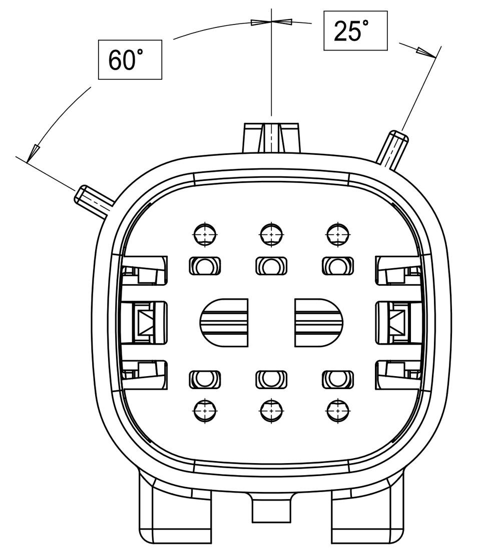

KEY C

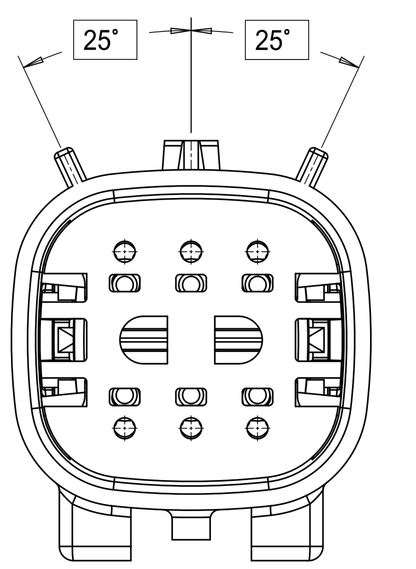

KEY D

2X4

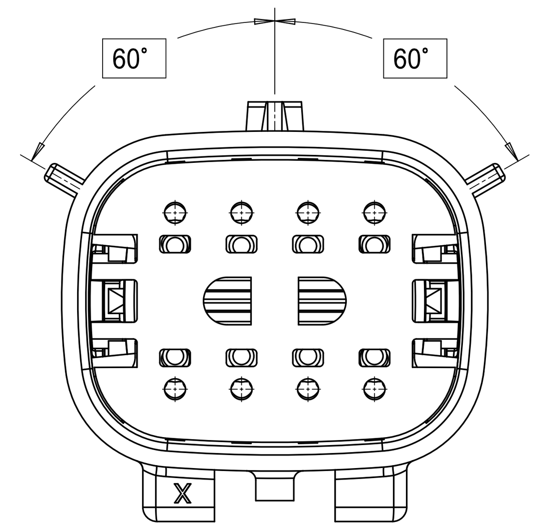

KEY A

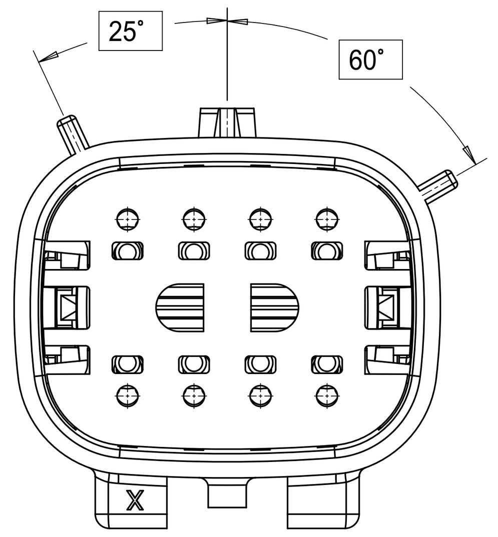

KEY B

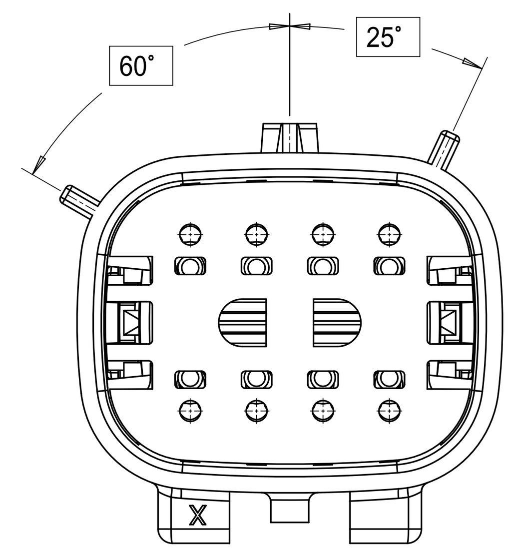

KEY C

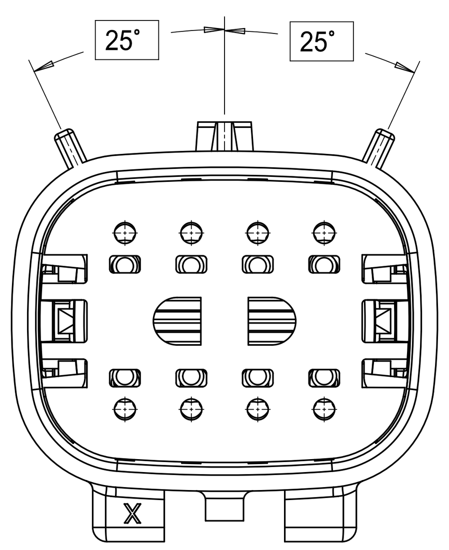

KEY D

THIS DRAWING CONTAINS INFORMATION THAT IS PROPRIETARY TO MOLEX ELECTRONIC TECHNOLOGIES, LLC AND SHOULD NOT BE USED WITHOUT WRITTEN PERMISSION

FUNCTIONAL SYMBOLS	FA = 0; FC = 0; FP = 0
DIVISIONAL SYMBOLS	
DIMENSION UNITS	mm
SCALE	3:1
GENERAL TOLERANCES (UNLESS SPECIFIED)	
ANGULAR TOL	± 1°
4 PLACES	±
3 PLACES	±
2 PLACES	± 0.100
1 PLACE	± 0.20
0 PLACES	±
DRAFT WHERE APPLICABLE MUST REMAIN WITHIN DIMENSIONS	
CURRENT REV DESC:	
STATUS:	Production
DRWN:	Yann Chen 2023-09-26
CHK'D:	Yu Chao Fu 2023-09-26
APPR:	Elvis Song 2023-09-27
THIRD ANGLE PROJECTION	
DRAWING	A1-SIZE
SERIES	33482
	molex
	MX150 BLADE DUAL ROW SEALED ASSEMBLY
	PRODUCT SALES DRAWING
DOCUMENT NUMBER	SD-33482-0001
DOC TYPE	PSD
DOC PART	001
REVISION	E3
MATERIAL NUMBER	
CUSTOMER	GENERAL MARKET
SHEET NUMBER	3 OF 11

SHEET DESCRIPTION
KEY CONFIGURATIONS CONT.

2X6

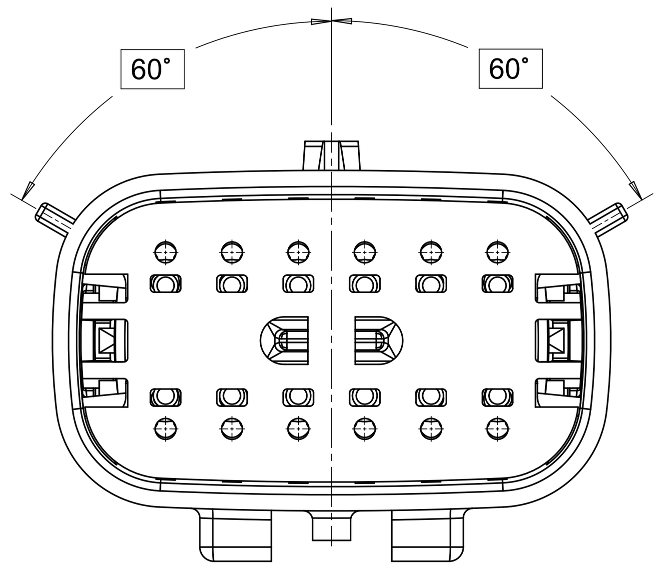

KEY A

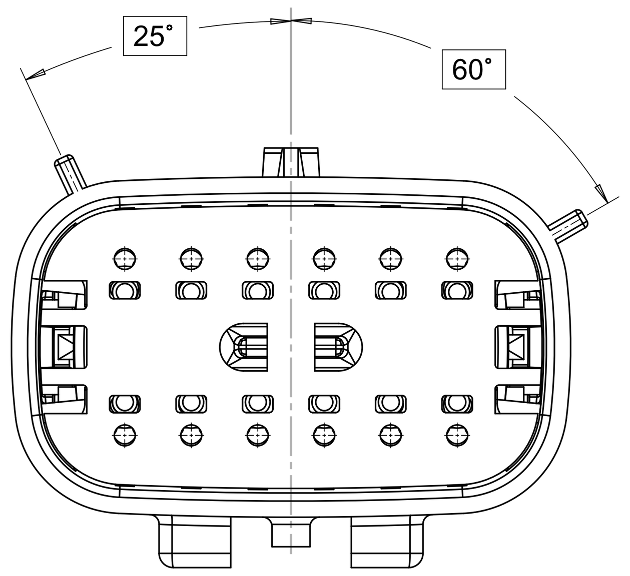

KEY B

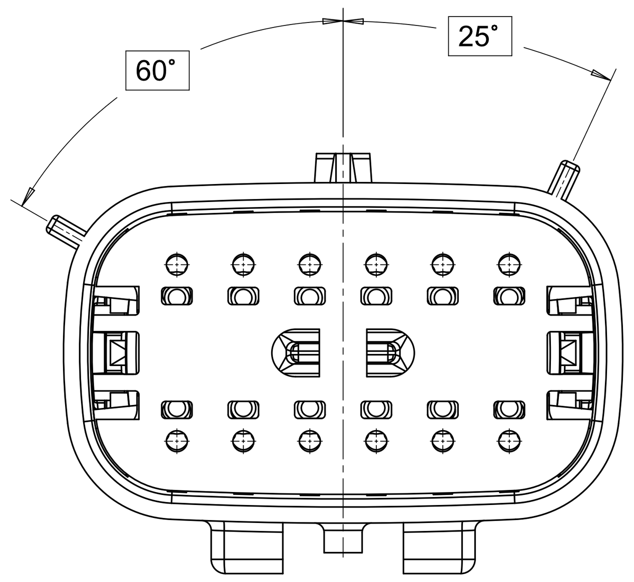

KEY C

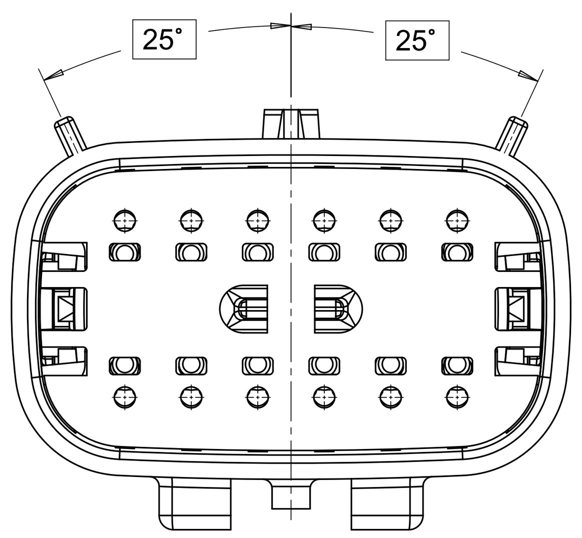

KEY D

2X8

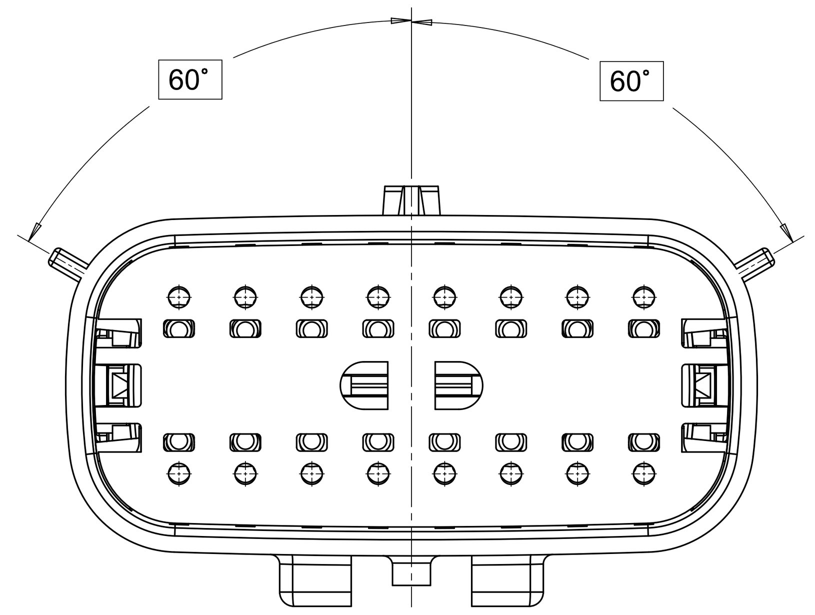

KEY A

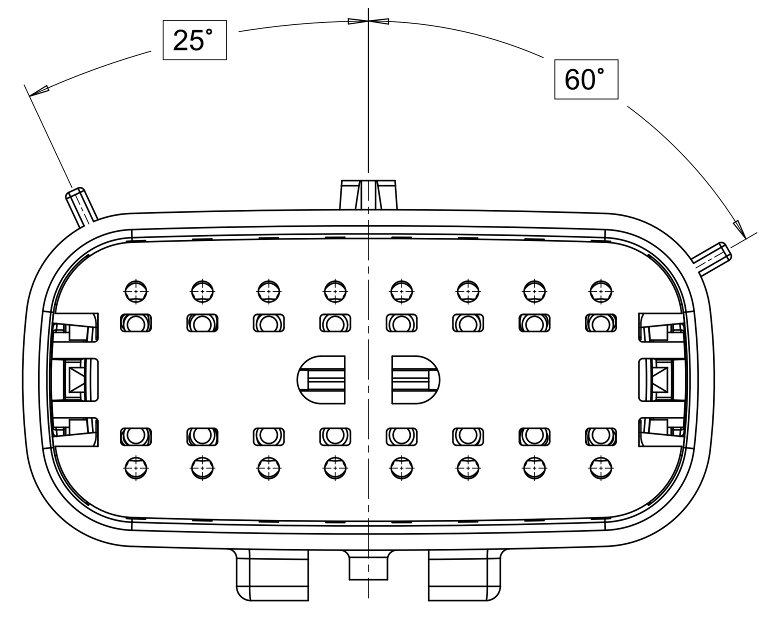

KEY B

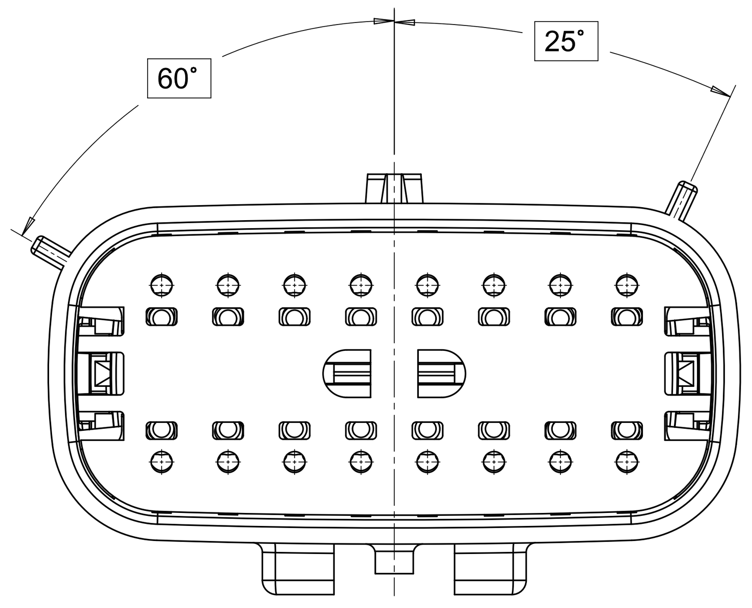

KEY C

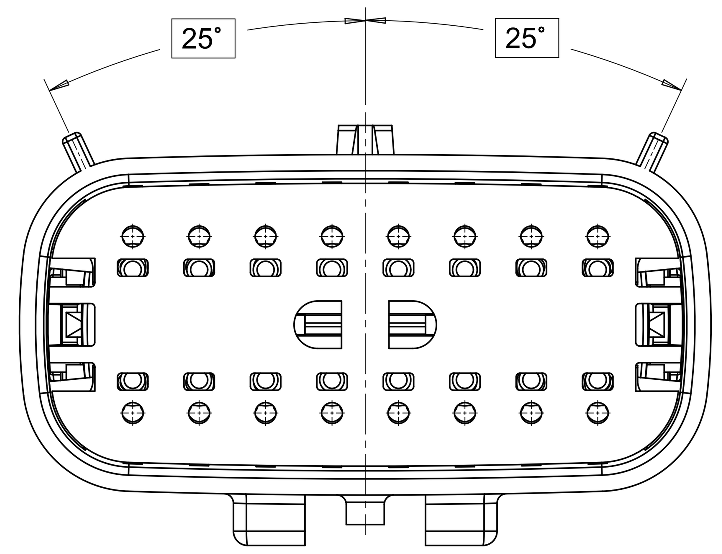

KEY D

2X10

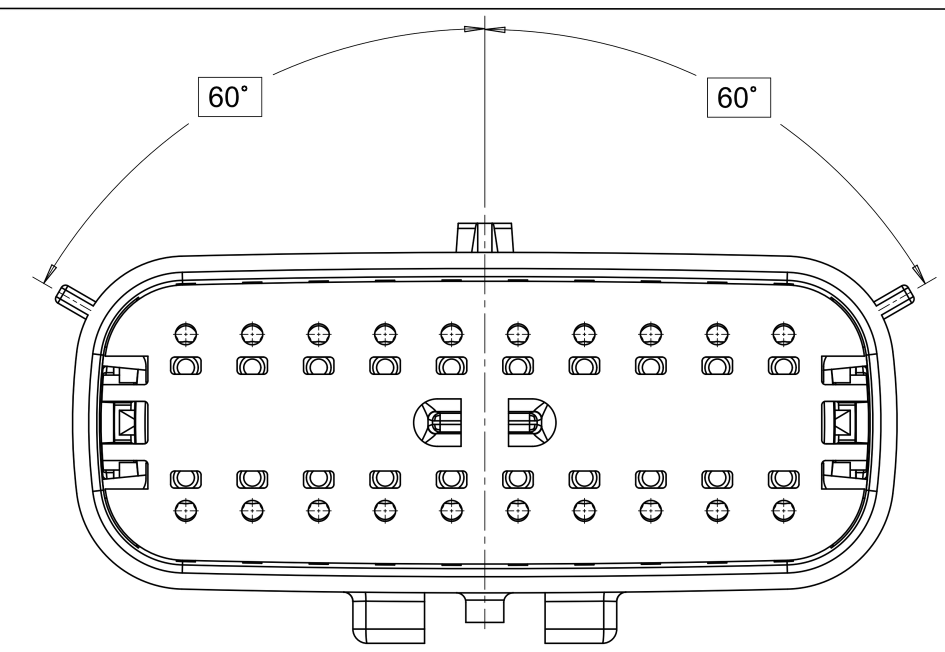

KEY A

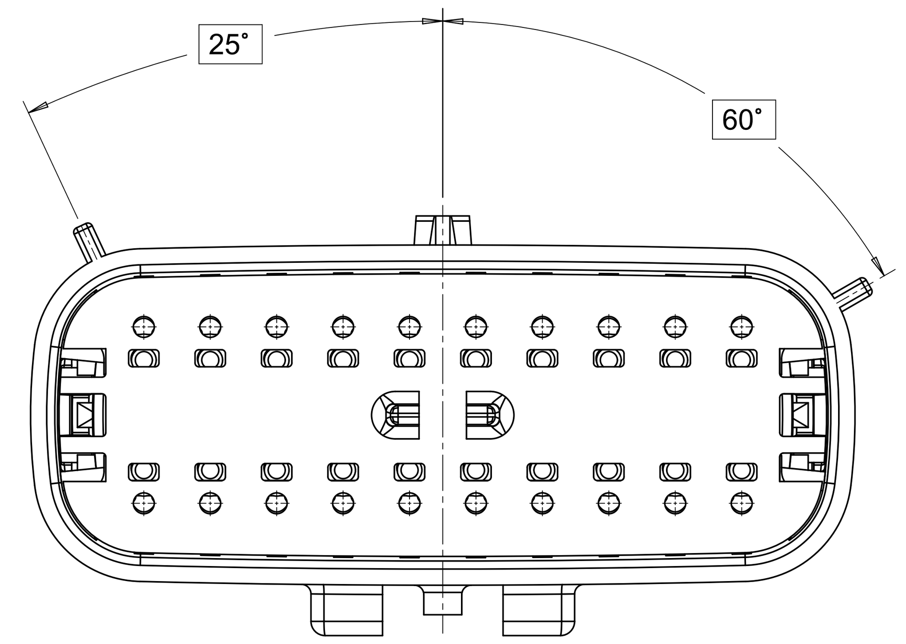

KEY B

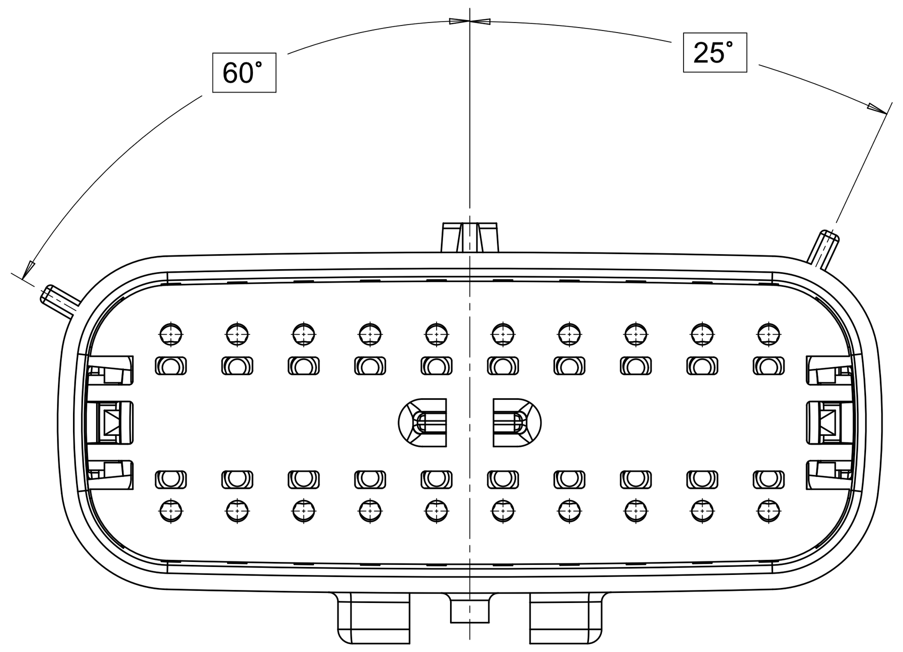

KEY C

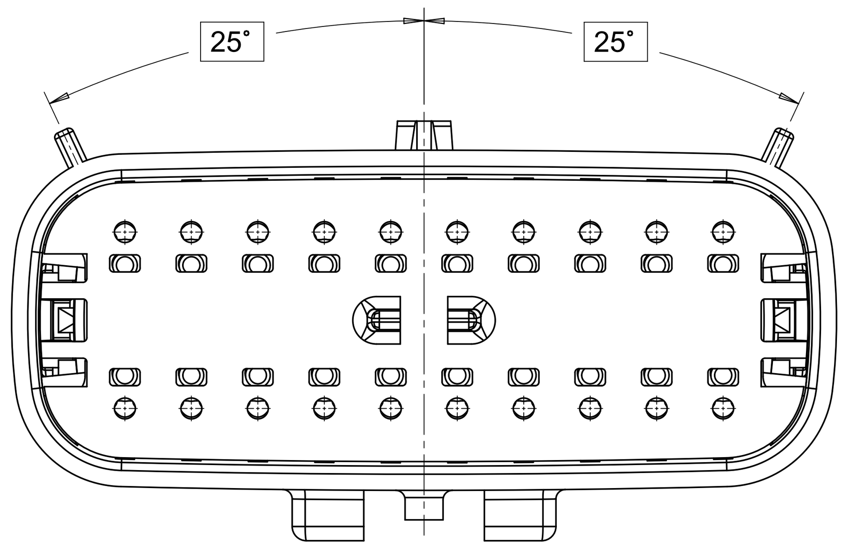

KEY D

THIS DRAWING CONTAINS INFORMATION THAT IS PROPRIETARY TO MOLEX ELECTRONIC TECHNOLOGIES, LLC AND SHOULD NOT BE USED WITHOUT WRITTEN PERMISSION

FUNCTIONAL SYMBOLS	FA = 0; FC = 0; FP = 0
DIVISIONAL SYMBOLS	
DIMENSION UNITS	mm
SCALE	3:1
GENERAL TOLERANCES (UNLESS SPECIFIED)	
ANGULAR TOL	± 1°
4 PLACES	±
3 PLACES	±
2 PLACES	± 0.100
1 PLACE	± 0.20
0 PLACES	±
DRAFT WHERE APPLICABLE MUST REMAIN WITHIN DIMENSIONS	
CURRENT REV DESC:	
STATUS:	Production
DRWN:	Yann Chen 2023-09-26
CHK'D:	Yu Chao Fu 2023-09-26
APPR:	Elvis Song 2023-09-27
THIRD ANGLE PROJECTION	
DRAWING	A1-SIZE
SERIES	33482
	molex
	MX150 BLADE DUAL ROW SEALED ASSEMBLY
	PRODUCT SALES DRAWING
DOCUMENT NUMBER	SD-33482-0001
DOC TYPE	PSD
DOC PART	001
REVISION	E3
MATERIAL NUMBER	
CUSTOMER	GENERAL MARKET
SHEET NUMBER	4 OF 11

SHEET DESCRIPTION
BLADE SEALED ASSEMBLY

CHARTED DIMENSION					
DESCRIPTION	DIMENSIONS				
	A	B	C	D	E
2X2	15.54	1.75	24.40	54.45	22.23
2X3 STANDARD	19.04	3.50	26.21	54.45	22.23
2X3 LENGTHENED	19.04	3.50	26.21	56.45	22.23
2X4	22.54	1.75	27.21	54.45	22.23
2X6	29.54	1.75	32.27	54.45	22.23
2X8	36.54	1.75	38.88	54.45	22.23
2X10	43.64	1.75	45.65	54.45	22.05

OPTIONAL LASER MARKING ON THIS SURFACE SEE NOTE 3g.

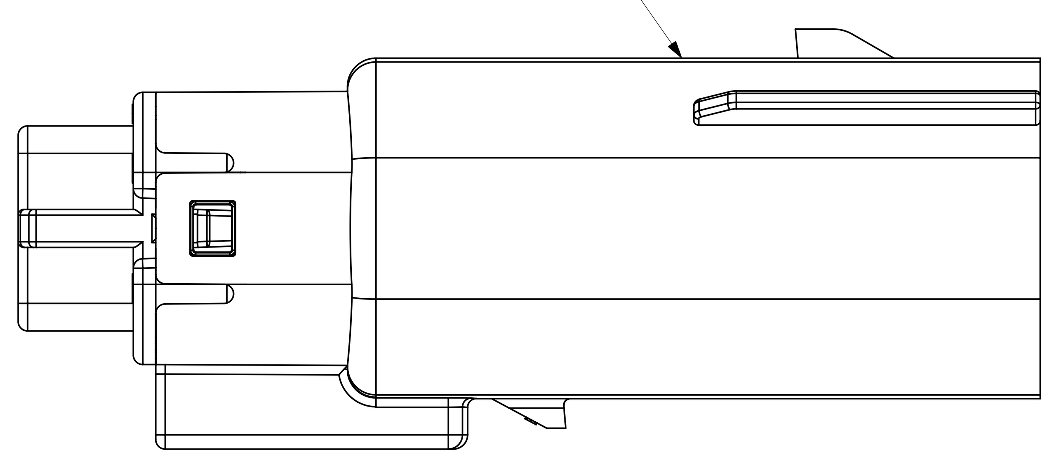

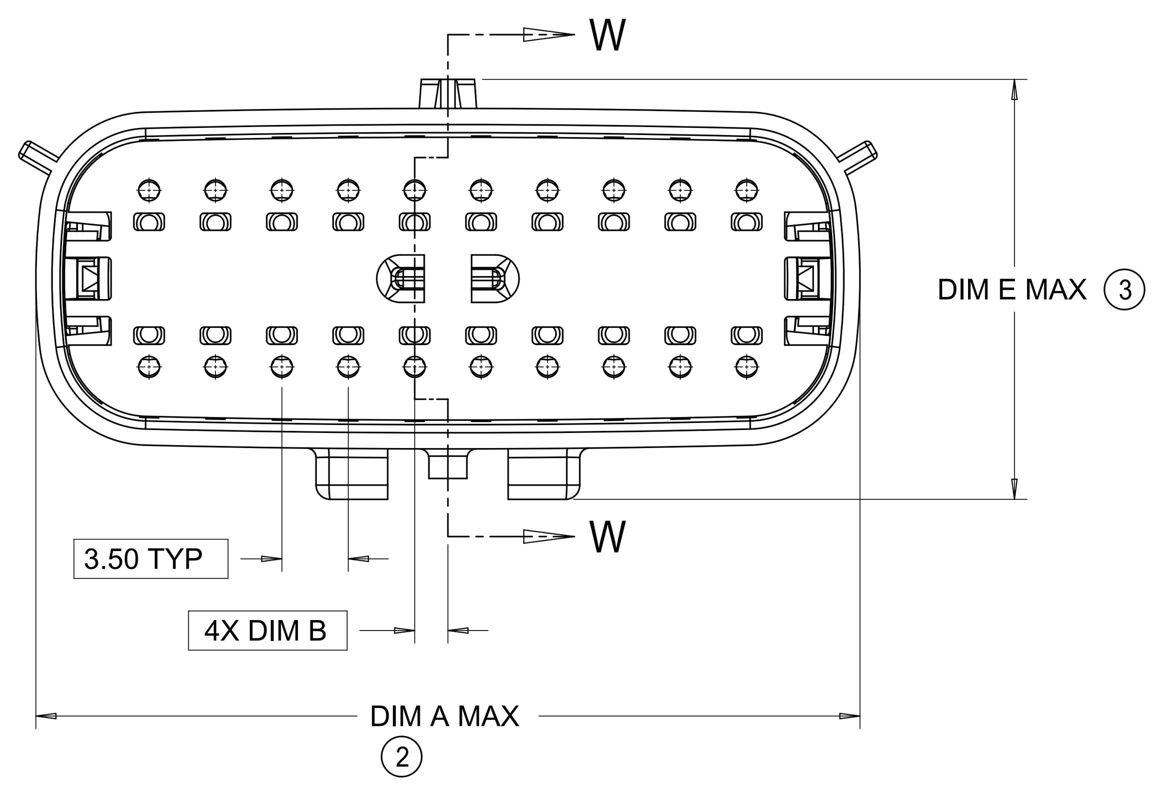

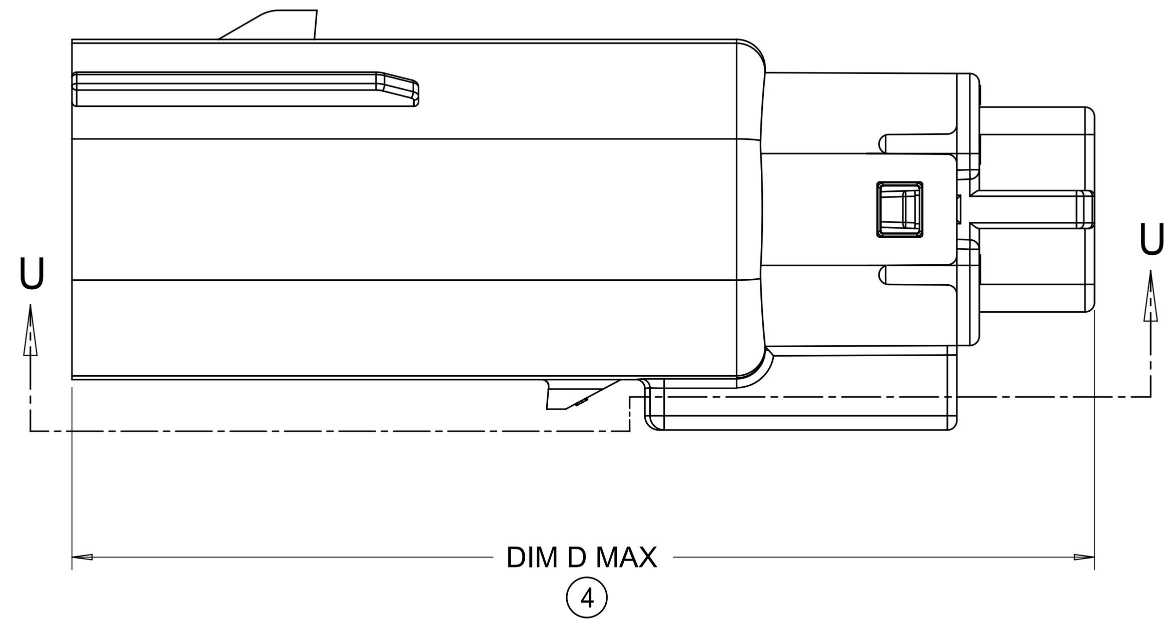

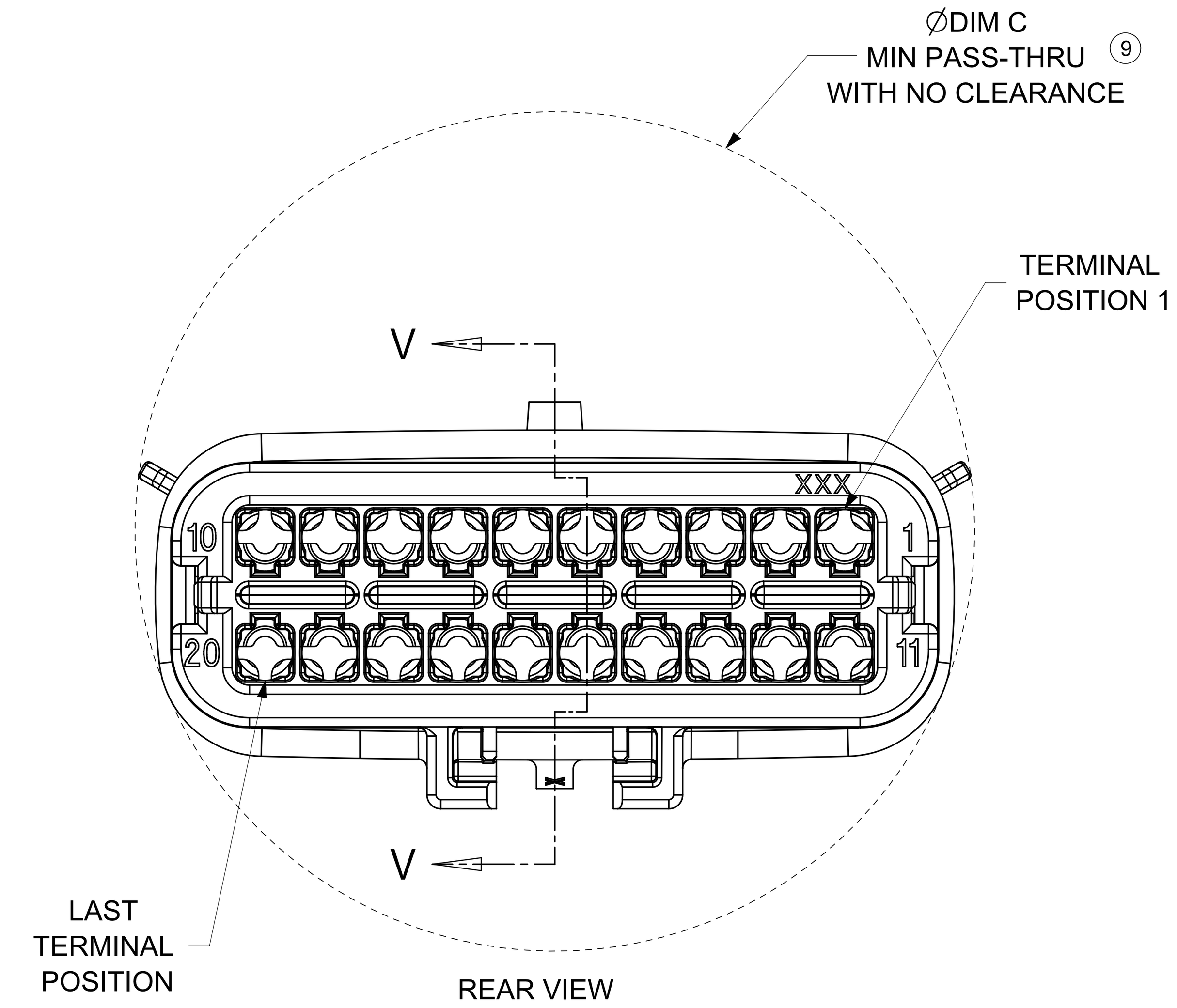

REAR VIEW
(WIRE HARNESS SIDE)

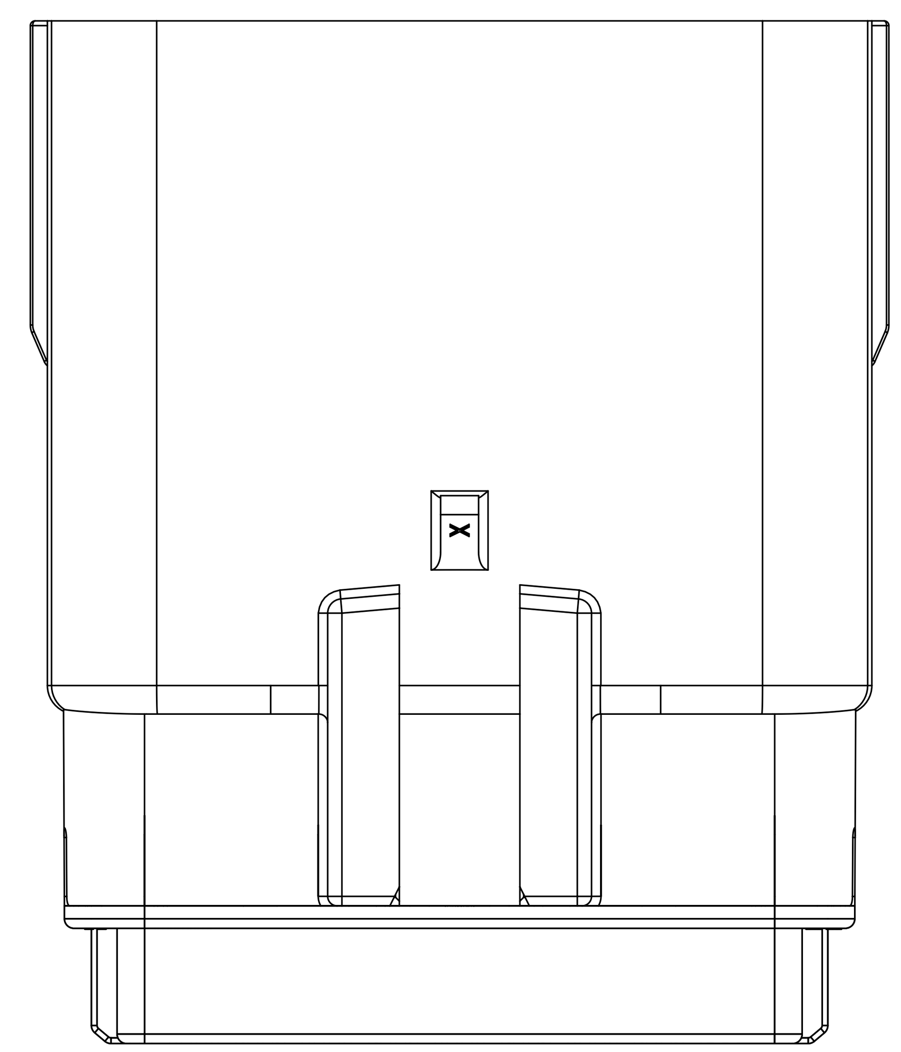

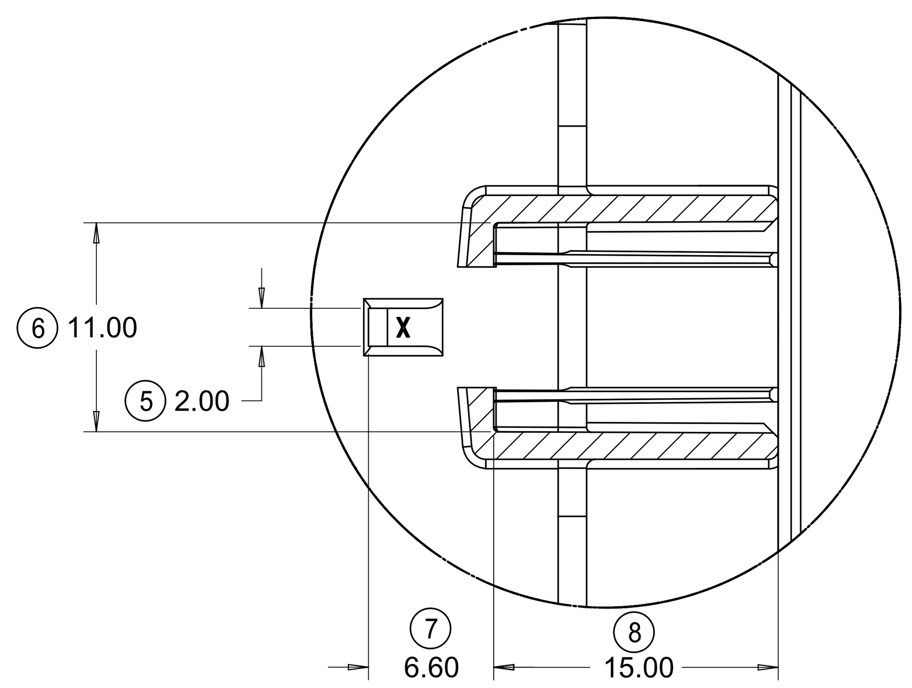

PartialU-U
SCALE 3:1

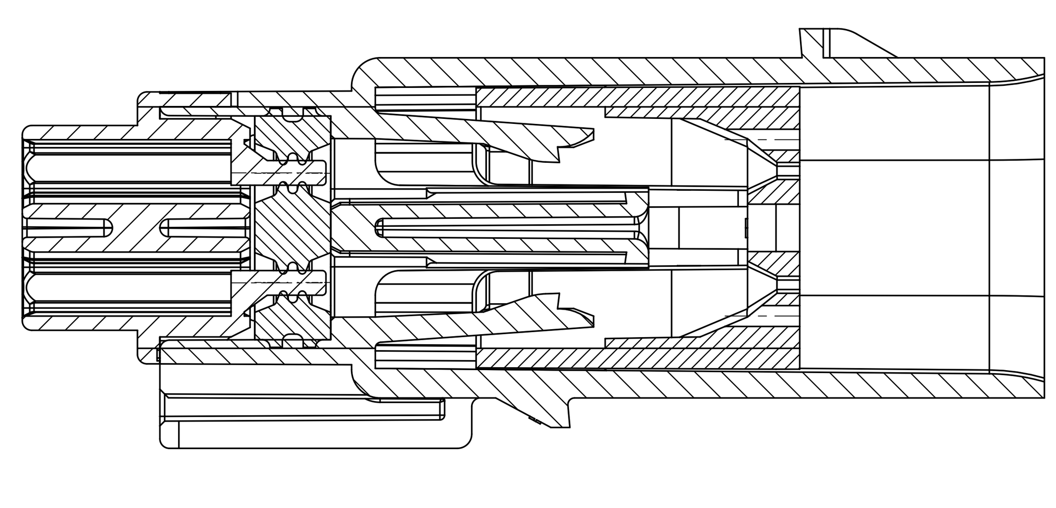

PRIMARY LOCK REINFORCEMENT (PLR) SHOWN IN PRE-STAGED POSITION

SECTION W-W

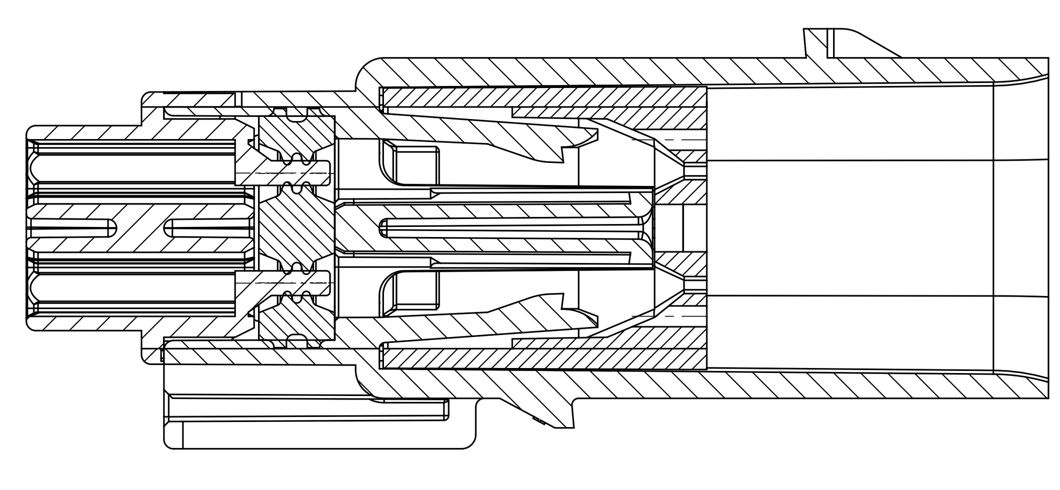

PRIMARY LOCK REINFORCEMENT (PLR) SHOWN IN FINAL-LOCK POSITION

SECTION V-V

FUNCTIONAL SYMBOLS	THIS DRAWING CONTAINS INFORMATION THAT IS PROPRIETARY TO MOLEX ELECTRONIC TECHNOLOGIES, LLC AND SHOULD NOT BE USED WITHOUT WRITTEN PERMISSION			
FA = 0	DIMENSION UNITS: mm	SCALE: 3:1	CURRENT REV DESC:	molex
FC = 0	GENERAL TOLERANCES (UNLESS SPECIFIED)			MX150 BLADE DUAL ROW SEALED ASSEMBLY
FP = 0	ANGULAR TOL ± 1°			
DIVISIONAL SYMBOLS	4 PLACES ±			PRODUCT SALES DRAWING
	3 PLACES ±		STATUS: Production	DOCUMENT NUMBER: SD-33482-0001
	2 PLACES ± 0.100		DRWN: Yann Chen 2023-09-26	DOC TYPE: PSD
	1 PLACE ± 0.20		CHK'D: Yu Chao Fu 2023-09-26	DOC PART: 001
	0 PLACES ±		APPR: Elvis Song 2023-09-27	REVISION: E3
	DRAFT WHERE APPLICABLE MUST REMAIN WITHIN DIMENSIONS	THIRD ANGLE PROJECTION	DRAWING: A1-SIZE; SERIES: 33482	MATERIAL NUMBER; CUSTOMER: GENERAL MARKET; SHEET NUMBER: 5 OF 11

SHEET DESCRIPTION
SYSTEM PACKAGING

CHARTED DIMENSION				
CKT	BLADE CONFIGURATION	RECEPTACLE CONFIGURATION	DIMENSIONS K	DIMENSIONS L
2X2	STANDARD	W/O CLIPSLOT	72.78	28.00
		W/ CLIPSLOT	72.78	28.50
		LENGTHENED	77.21	28.00
2X3	STANDARD	W/O CLIPSLOT	72.78	28.00
		W/ CLIPSLOT		30.50
	LENGTHENED	W/O CLIPSLOT	74.79	28.00
		W/ CLIPSLOT		30.50
2X4	STANDARD	W/O CLIPSLOT	72.78	29.50
		W/ CLIPSLOT		31.50
2X6	STANDARD	W/O CLIPSLOT	72.79	35.58
		W/ CLIPSLOT		
2X8	STANDARD	W/O CLIPSLOT	72.67	42.25
		W/ CLIPSLOT		
2X10	STANDARD	STANDARD	72.78	49.05

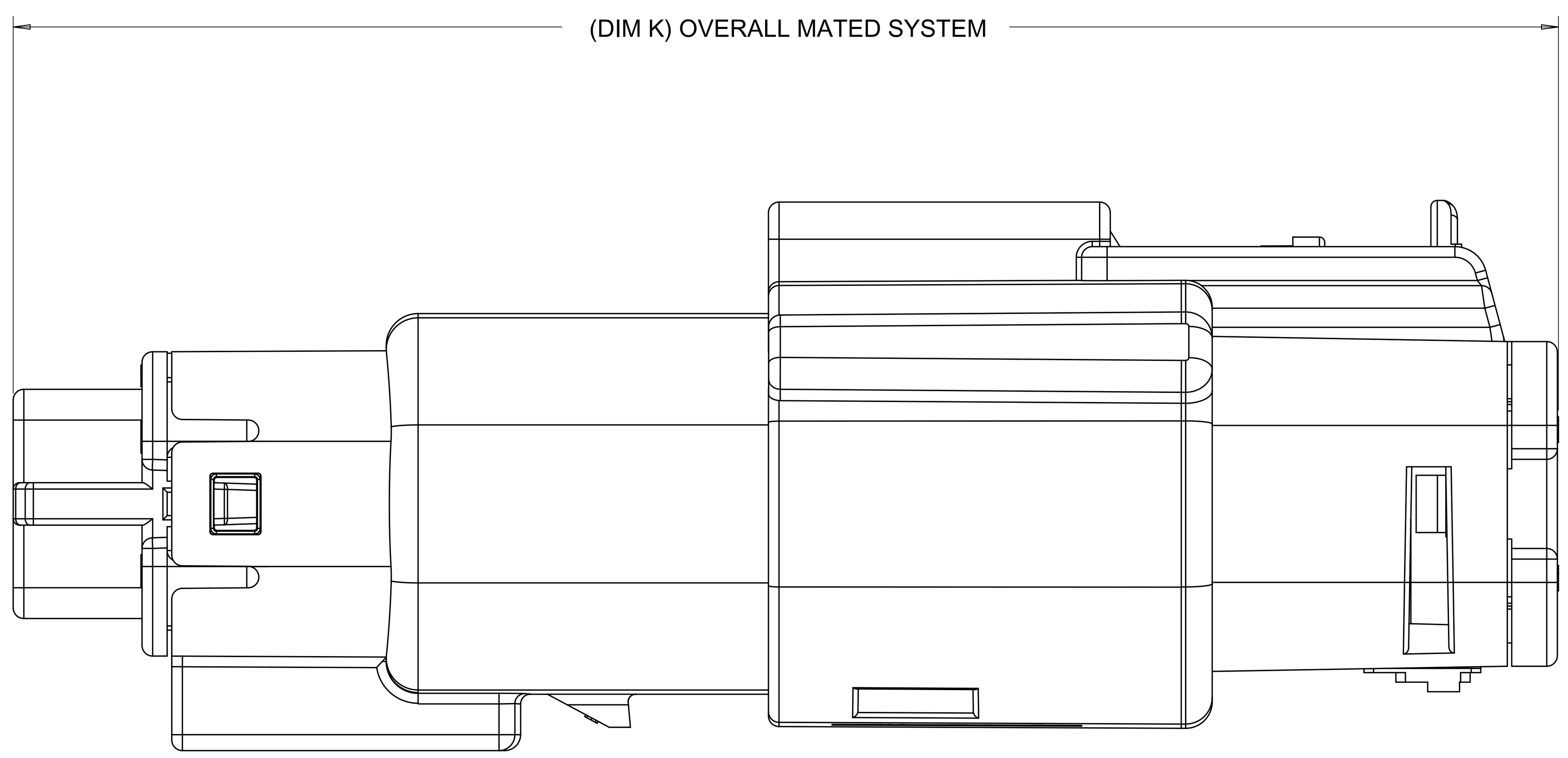

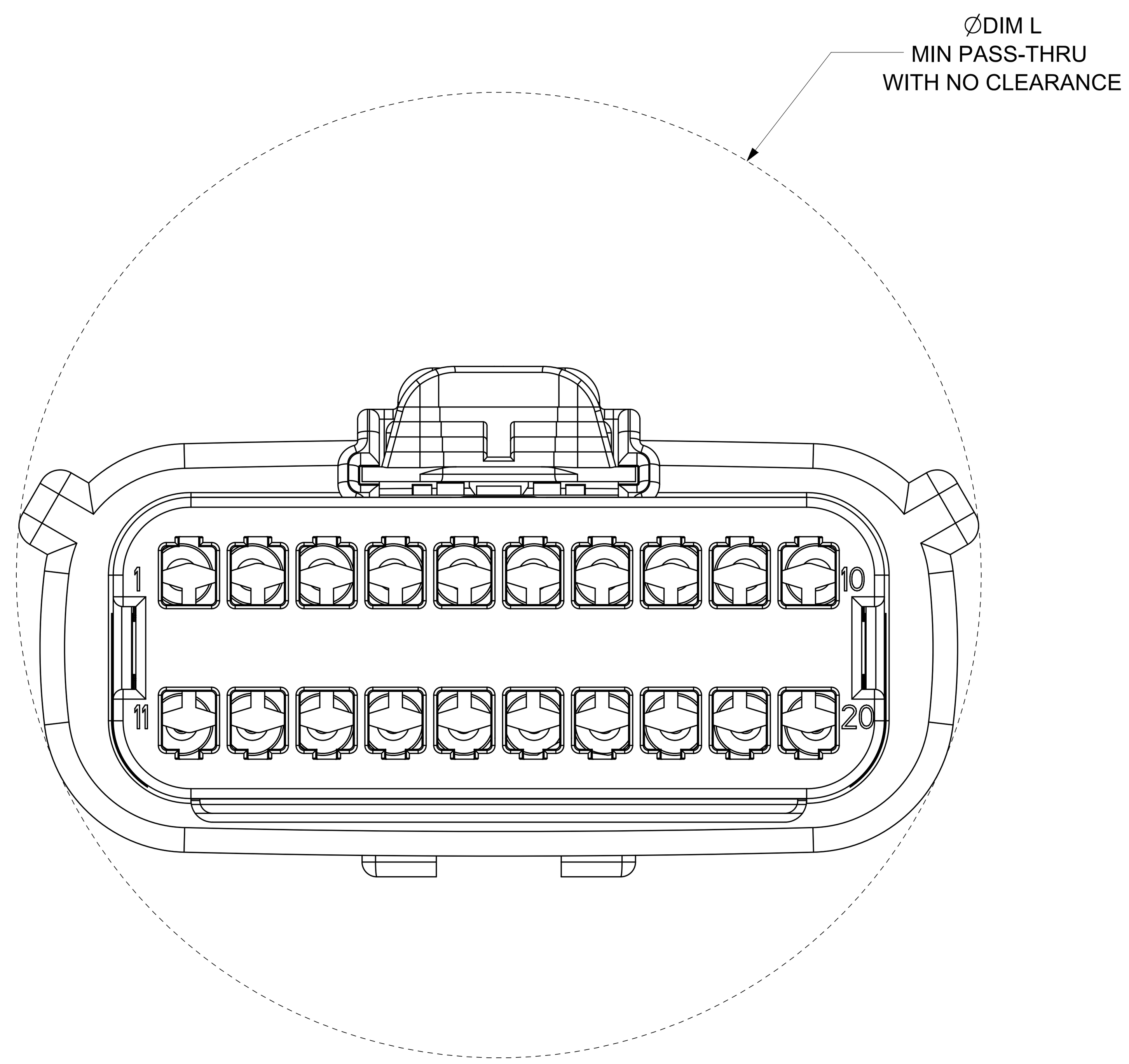

THIS DRAWING CONTAINS INFORMATION THAT IS PROPRIETARY TO MOLEX ELECTRONIC TECHNOLOGIES, LLC AND SHOULD NOT BE USED WITHOUT WRITTEN PERMISSION

FUNCTIONAL SYMBOLS		
A = 0	DIMENSION UNITS: mm	SCALE: 4:1
C = 0	GENERAL TOLERANCES (UNLESS SPECIFIED)	
P = 0	ANGULAR TOL	± 1°
	4 PLACES	±
DIVISIONAL SYMBOLS	3 PLACES	±
	2 PLACES	± 0.100
	1 PLACE	± 0.20
	0 PLACES	±
	DRAFT WHERE APPLICABLE MUST REMAIN WITHIN DIMENSIONS	

CURRENT REV DESC:

STATUS: Production
DRWN: Yann Chen 2023-09-26
CHK'D: Yu Chao Fu 2023-09-26
APPR: Elvis Song 2023-09-27

THIRD ANGLE PROJECTION | DRAWING: A1-SIZE | SERIES: 33482

molex

MX150 BLADE
DUAL ROW SEALED ASSEMBLY

PRODUCT SALES DRAWING

DOCUMENT NUMBER	DOC TYPE	DOC PART	REVISION
SD-33482-0001	PSD	001	E3

MATERIAL NUMBER	CUSTOMER	SHEET NUMBER
	GENERAL MARKET	6 OF 11

SHEET DESCRIPTION
BACKSHELL NOTES

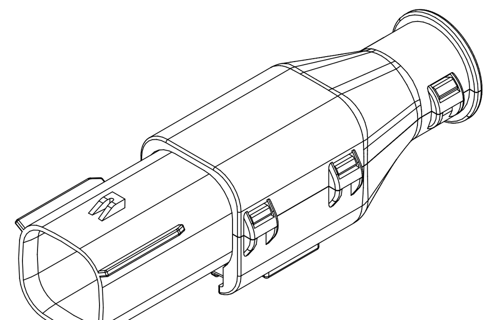

2X3

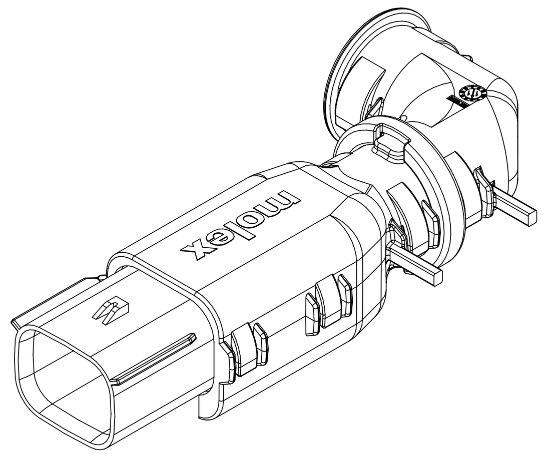

2X4

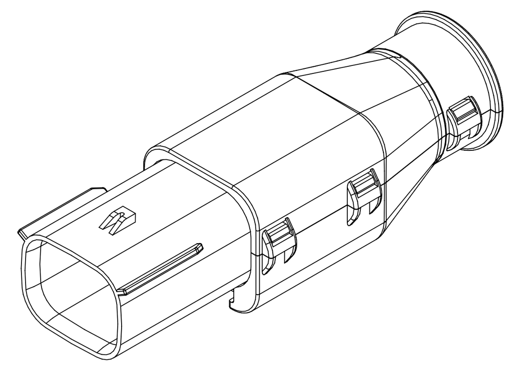

2X4

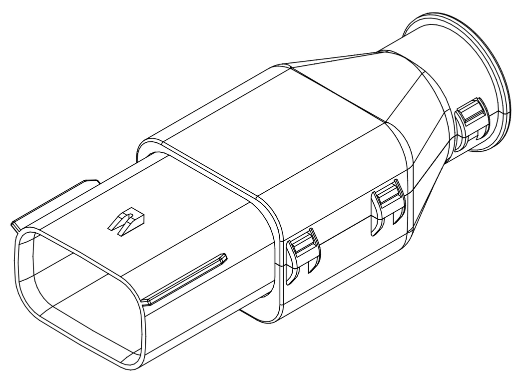

2X6

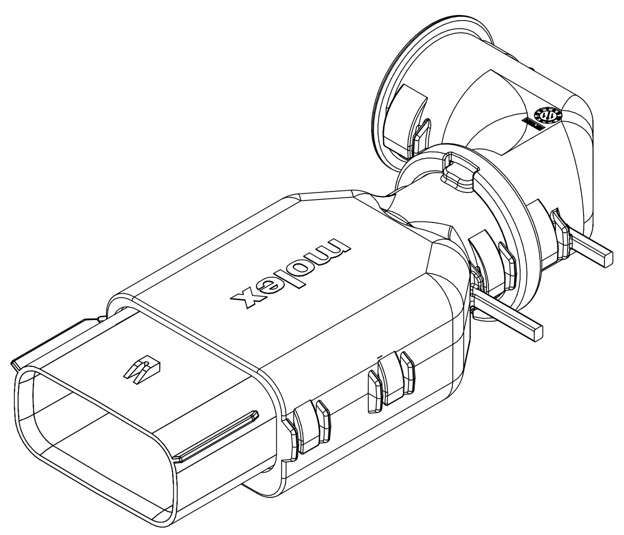

2X8

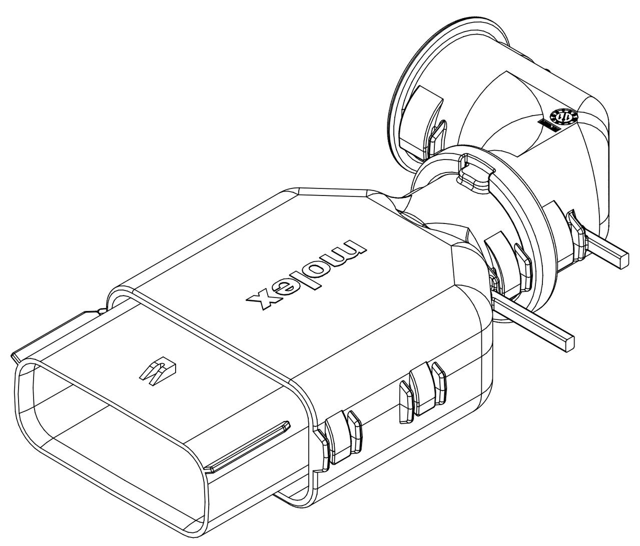

2X10

BACKSHELL NOTES: VALID UNLESS OTHERWISE SPECIFIED

1. GENERAL:
a. APPLICATION SPECIFICATION SEE: AS-34951-001
- -DESIGNED TO MATE WITH BLADE SEALED ASSEMBLY SPECIFIED IN MOLEX DRAWING SD-33482-0001.
- -SYSTEM TO BE USED WITH WIRE WITHIN DIAMETER RANGE OF 1.2mm TO 2.69mm.
- -COMPONENTS ARE OPTIONAL AND MUST BE PURCHASED SEPERATELY.
- -DESIGN IS OWNED BY SCHLEMMER FOR SCHLEMMER BACKSHELL.
- -DESIGN IS OWNED BY MOLEX FOR MOLEX BACKSHELL.
- -90˚ ADAPTOR DESIGN IS OWNED BY MOLEX.
- -FOR ADDITIONAL INFORMATION SEE THE BACKSHELL COMPONENT DRAWING SD-34950-0001.

BACKSHELL CUSTOMER
MODEL NUMBER LEGEND

34950-XXXX

CUSTOMER MODEL COMPONENTS
- 0 - SCHLEMMER BACKSHELL ONLY
- 1 - SCHLEMMER BACKSHELL & MX150 HOUSING KEY A ASSEMBLY
- 2 - SCHLEMMER BACKSHELL & MX150 HOUSING KEY B ASSEMBLY
- 3 - SCHLEMMER BACKSHELL & MX150 HOUSING KEY C ASSEMBLY
- 4 - SCHLEMMER BACKSHELL & MX150 HOUSING KEY D ASSEMBLY
- 5 - MOLEX BACKSHELL ONLY
- 6 - MOLEX BACKSHELL & MX150 HOUSING KEY A ASSEMBLY
- 7 - MOLEX BACKSHELL & MX150 HOUSING KEY B ASSEMBLY
- 8 - MOLEX BACKSHELL & MX150 HOUSING KEY C ASSEMBLY
- 9 - MOLEX BACKSHELL & MX150 HOUSING KEY D ASSEMBLY

BACKSHELL FEATURES
- 1 - WITH RIBS
- 2 - WITHOUT RIBS
- 3 - 90˚ ADAPTOR

MX150 CIRCUIT SIZE 04, 06, 08, 12, 16, 20

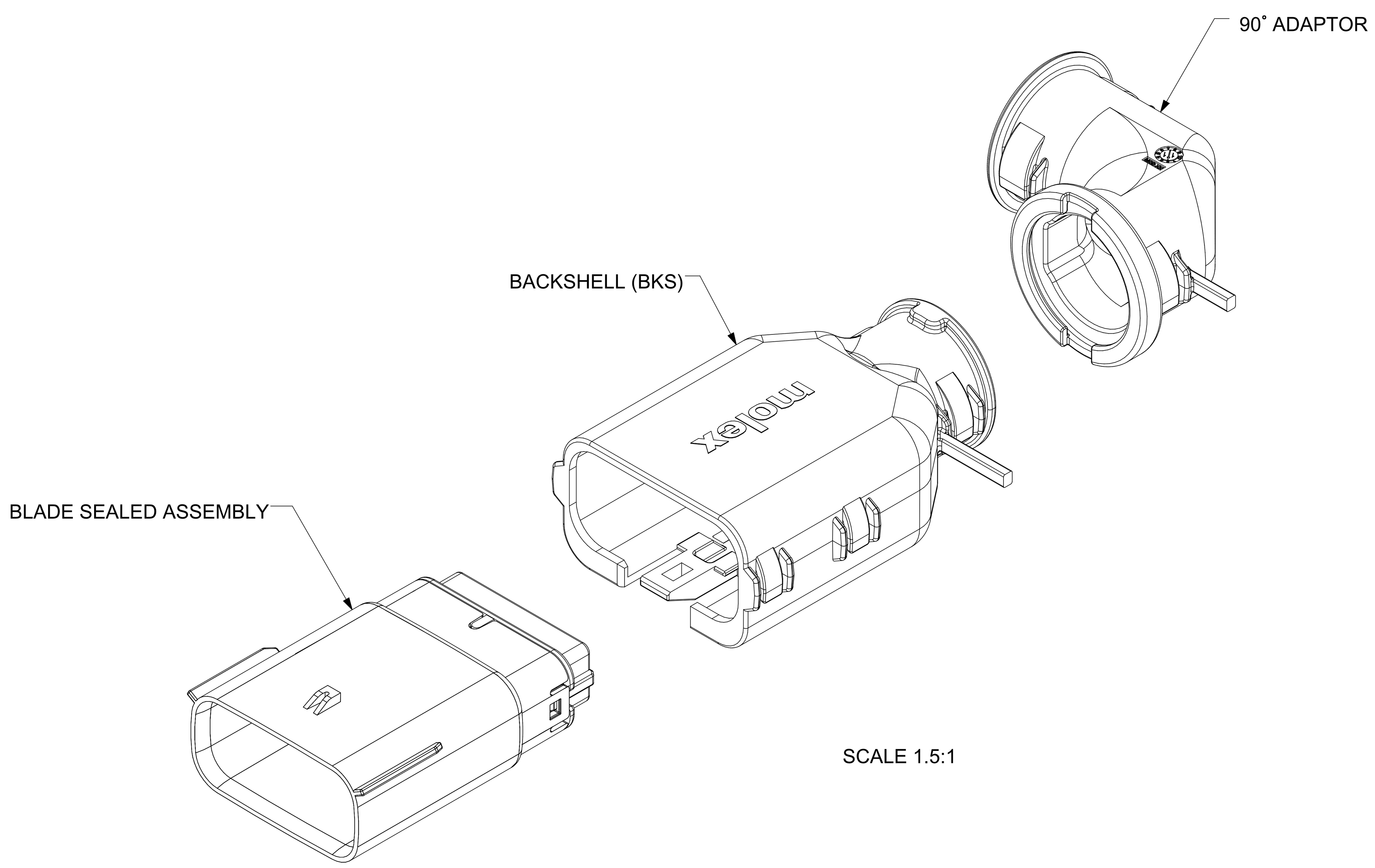

SCALE 1.5:1

THIS DRAWING CONTAINS INFORMATION THAT IS PROPRIETARY TO MOLEX ELECTRONIC TECHNOLOGIES, LLC AND SHOULD NOT BE USED WITHOUT WRITTEN PERMISSION

FUNCTIONAL SYMBOLS: FA = 0, FC = 0, FP = 0
DIVISIONAL SYMBOLS

DIMENSION UNITS	SCALE
mm	1.5:1

GENERAL TOLERANCES (UNLESS SPECIFIED)

ANGULAR TOL	± 1˚
4 PLACES	±
3 PLACES	±
2 PLACES	± 0.100
1 PLACE	± 0.20
0 PLACES	±

DRAFT WHERE APPLICABLE MUST REMAIN WITHIN DIMENSIONS

CURRENT REV DESC:

STATUS: Production
DRWN: Yann Chen 2023-09-26
CHK'D: Yu Chao Fu 2023-09-26
APPR: Elvis Song 2023-09-27

THIRD ANGLE PROJECTION | DRAWING: A1-SIZE | SERIES: 33482

molex

MX150 BLADE
DUAL ROW SEALED ASSEMBLY

PRODUCT SALES DRAWING

DOCUMENT NUMBER	DOC TYPE	DOC PART	REVISION
SD-33482-0001	PSD	001	E3

MATERIAL NUMBER	CUSTOMER	SHEET NUMBER
	GENERAL MARKET	7 OF 11

SHEET DESCRIPTION
SCHLEMMER BACKSHELL

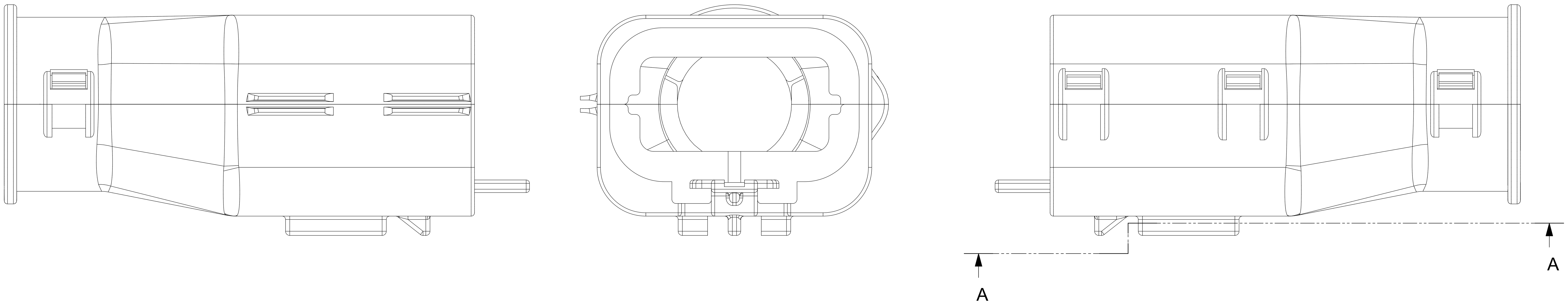

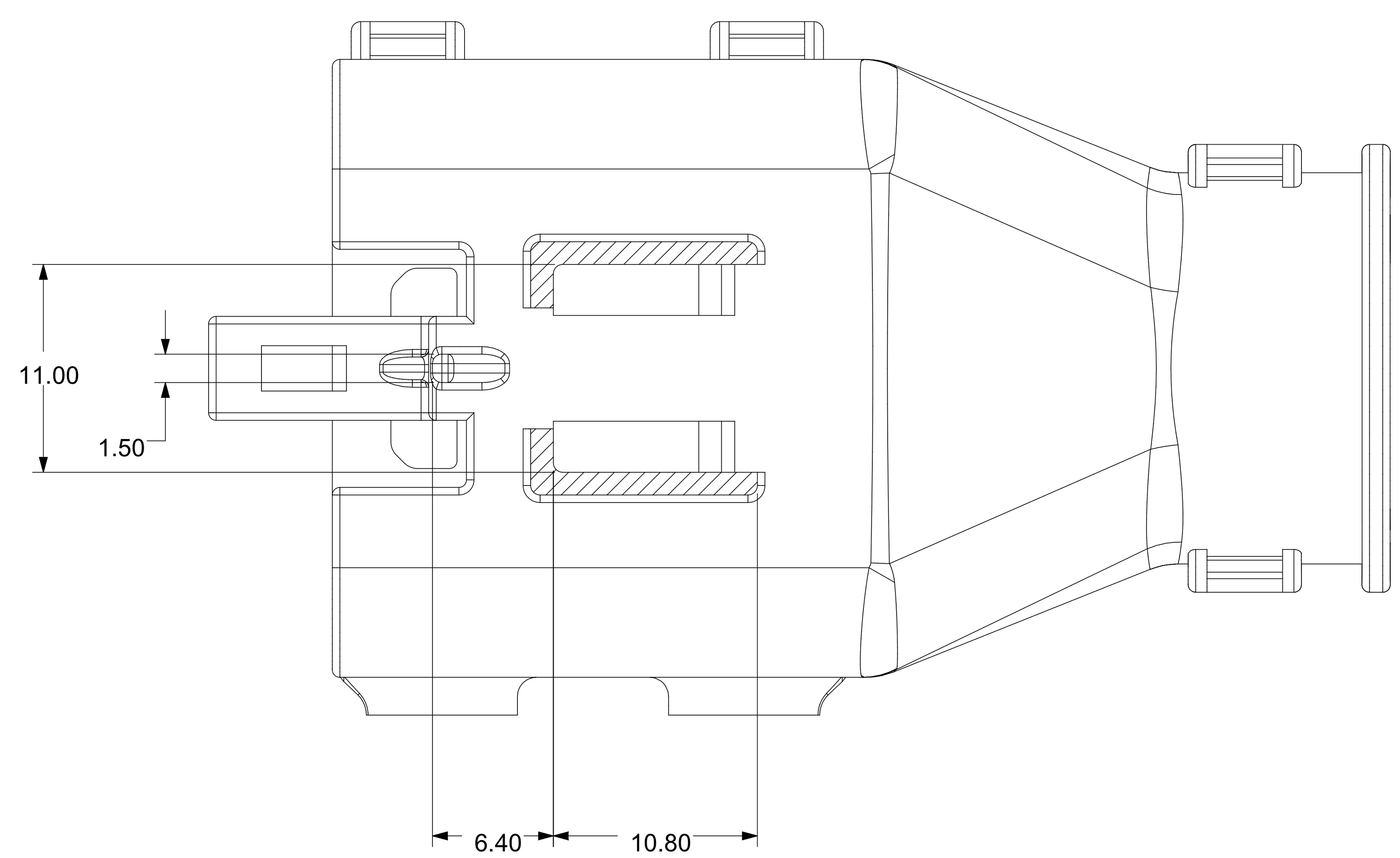

SECTION A-A

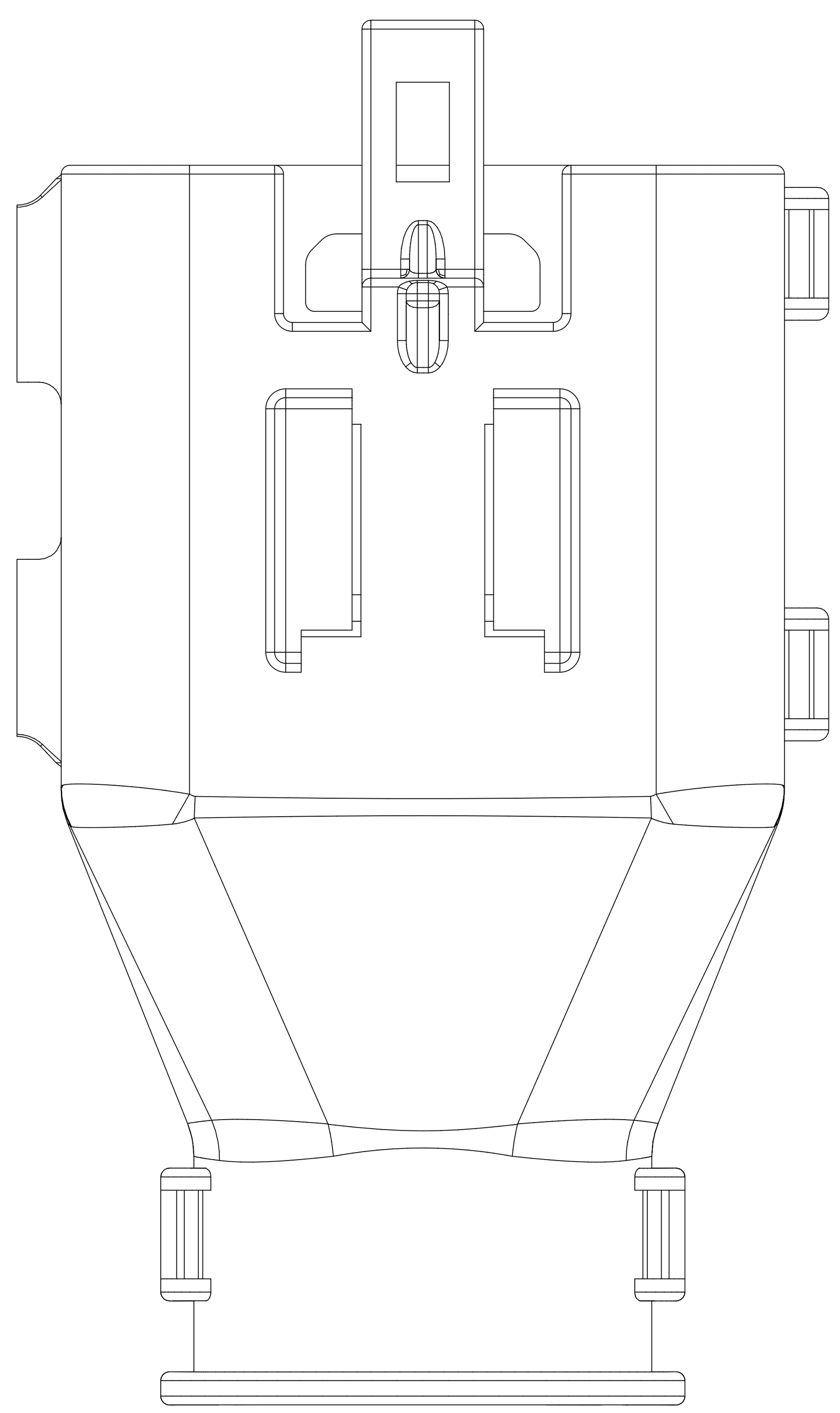

THIS DRAWING CONTAINS INFORMATION THAT IS PROPRIETARY TO MOLEX ELECTRONIC TECHNOLOGIES, LLC AND SHOULD NOT BE USED WITHOUT WRITTEN PERMISSION

FUNCTIONAL SYMBOLS		
FA = 0	DIMENSION UNITS: mm	SCALE: 3.5:1
FC = 0	GENERAL TOLERANCES (UNLESS SPECIFIED)	
FP = 0	ANGULAR TOL	± 1°
	4 PLACES	±
DIVISIONAL SYMBOLS	3 PLACES	±
	2 PLACES	± 0.100
	1 PLACE	± 0.20
	0 PLACES	±
	DRAFT WHERE APPLICABLE MUST REMAIN WITHIN DIMENSIONS	

CURRENT REV DESC:

STATUS:	Production	
DRWN:	Yann Chen	2023-09-26
CHK'D:	Yu Chao Fu	2023-09-26
APPR:	Elvis Song	2023-09-27

THIRD ANGLE PROJECTION	DRAWING	SERIES
	A1-SIZE	33482

molex

MX150 BLADE
DUAL ROW SEALED ASSEMBLY

PRODUCT SALES DRAWING

DOCUMENT NUMBER	DOC TYPE	DOC PART	REVISION
SD-33482-0001	PSD	001	E3

MATERIAL NUMBER	CUSTOMER	SHEET NUMBER
	GENERAL MARKET	8 OF 11

SHEET DESCRIPTION
MOLEX BACKSHELL

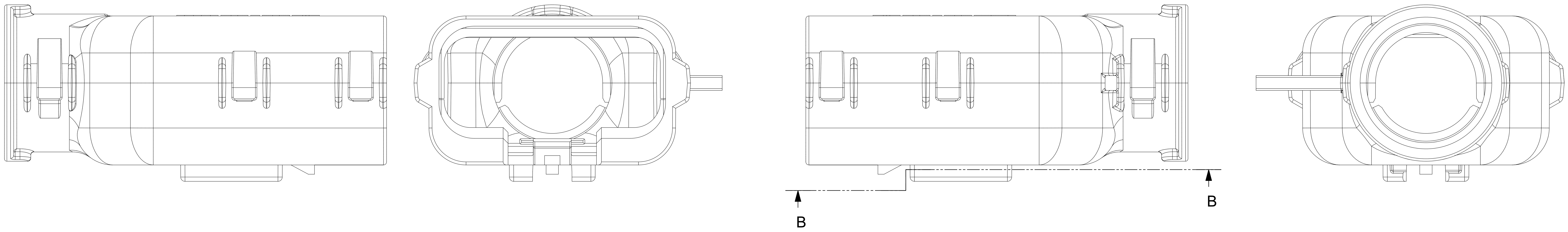

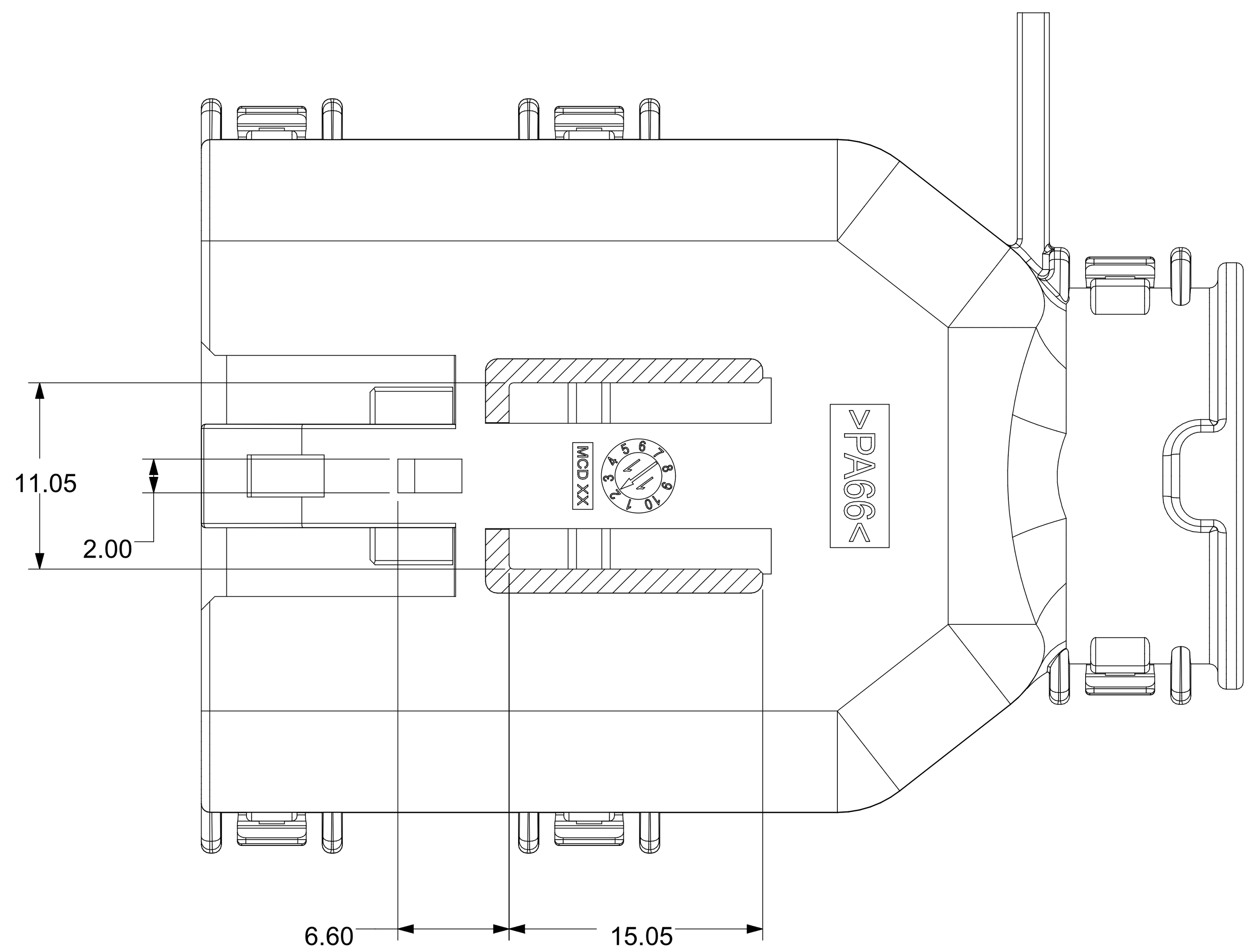

SECTION B-B

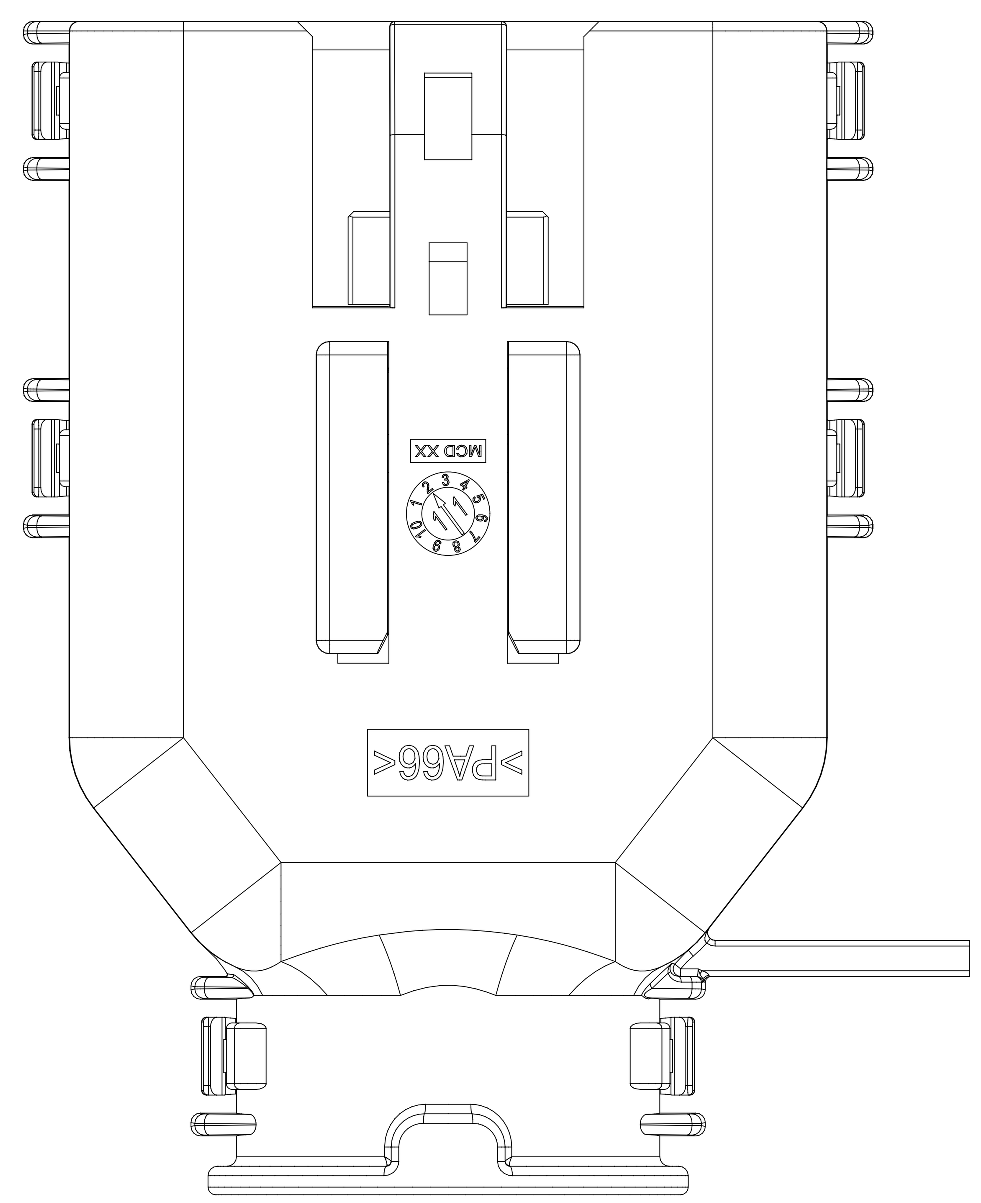

THIS DRAWING CONTAINS INFORMATION THAT IS PROPRIETARY TO MOLEX ELECTRONIC TECHNOLOGIES, LLC AND SHOULD NOT BE USED WITHOUT WRITTEN PERMISSION

FUNCTIONAL SYMBOLS		
FA = 0	DIMENSION UNITS: mm	SCALE: 3:1
FC = 0	GENERAL TOLERANCES (UNLESS SPECIFIED)	
FP = 0	ANGULAR TOL	± 1°
	4 PLACES	±
DIVISIONAL SYMBOLS	3 PLACES	±
	2 PLACES	± 0.100
	1 PLACE	± 0.20
	0 PLACES	±
	DRAFT WHERE APPLICABLE MUST REMAIN WITHIN DIMENSIONS	

CURRENT REV DESC:

STATUS: Production
DRWN: Yann Chen 2023-09-26
CHK'D: Yu Chao Fu 2023-09-26
APPR: Elvis Song 2023-09-27

THIRD ANGLE PROJECTION | DRAWING: A1-SIZE | SERIES: 33482

molex

MX150 BLADE
DUAL ROW SEALED ASSEMBLY

PRODUCT SALES DRAWING

DOCUMENT NUMBER	DOC TYPE	DOC PART	REVISION
SD-33482-0001	PSD	001	E3

MATERIAL NUMBER	CUSTOMER	SHEET NUMBER
	GENERAL MARKET	9 OF 11

SHEET DESCRIPTION
SCHLEMMER BACKSHELL CONFIGURATIONS

CHARTED DIMENSIONS

CKT	BLADE CONFIGURATION	RECEPTACLE CONFIGURATION	DIMENSIONS M	N	P	R	T
2X3	STANDARD	STANDARD	106.83	32.75	31.75	29.00	29.50
	LENGTHENED		108.71				
2X4	STANDARD	STANDARD	106.83	33.50	31.90	30.70	30.70
2X6	STANDARD	STANDARD	106.83	37.84	37.27	35.83	36.83

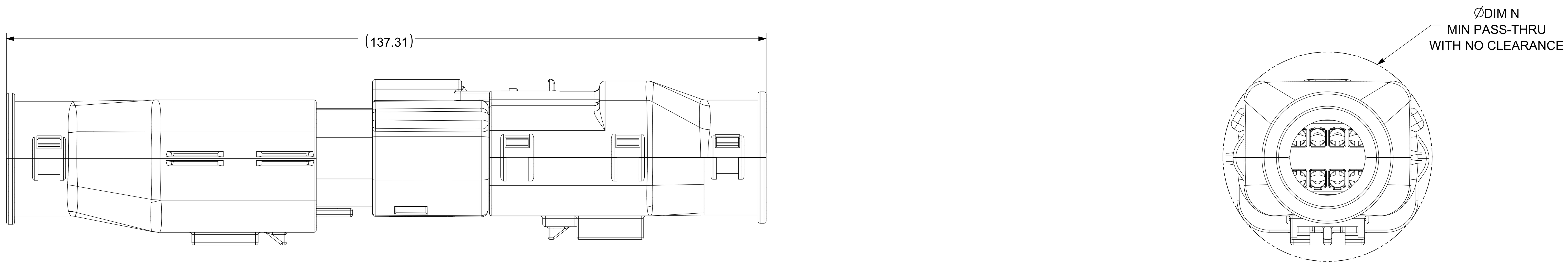

OVERALL MATED SYSTEM WITH BLADE AND RECEPTACLE BACKSHELL

OVERALL MATED SYSTEM WITH BLADE BACKSHELL

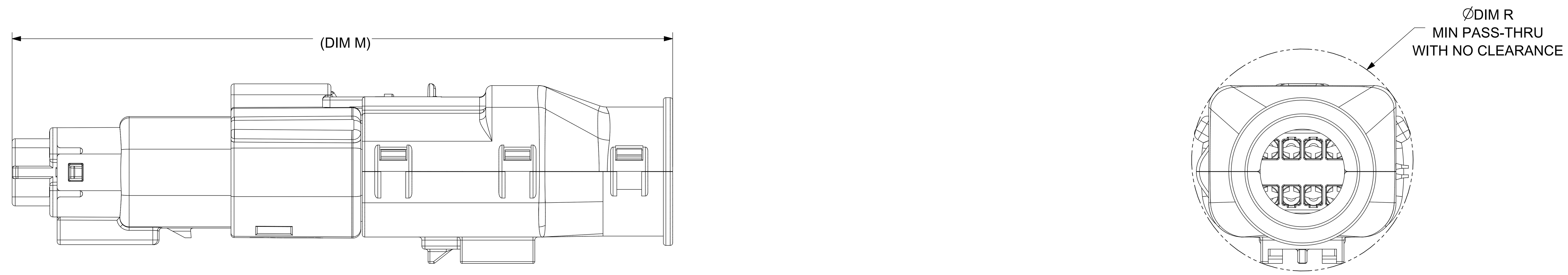

OVERALL MATED SYSTEM WITH RECEPTACLE BACKSHELL

BLADE SEALED ASSEMBLY WITH BLADE BACKSHELL

THIS DRAWING CONTAINS INFORMATION THAT IS PROPRIETARY TO MOLEX ELECTRONIC TECHNOLOGIES, LLC AND SHOULD NOT BE USED WITHOUT WRITTEN PERMISSION

FUNCTIONAL SYMBOLS: A = 0; C = 0; P = 0
DIVISIONAL SYMBOLS

DIMENSION UNITS	SCALE
mm	2:1

GENERAL TOLERANCES (UNLESS SPECIFIED)

ANGULAR TOL	± 1°
4 PLACES	±
3 PLACES	±
2 PLACES	± 0.100
1 PLACE	± 0.20
0 PLACES	±

DRAFT WHERE APPLICABLE MUST REMAIN WITHIN DIMENSIONS

CURRENT REV DESC:

STATUS: Production
DRWN: Yann Chen 2023-09-26
CHK'D: Yu Chao Fu 2023-09-26
APPR: Elvis Song 2023-09-27

THIRD ANGLE PROJECTION | DRAWING: A1-SIZE | SERIES: 33482

molex

MX150 BLADE
DUAL ROW SEALED ASSEMBLY

PRODUCT SALES DRAWING

DOCUMENT NUMBER	DOC TYPE	DOC PART	REVISION
SD-33482-0001	PSD	001	E3

MATERIAL NUMBER	CUSTOMER	SHEET NUMBER
	GENERAL MARKET	10 OF 11

SHEET DESCRIPTION
MOLEX BACKSHELL CONFIGURATIONS

OVERALL MATED SYSTEM WITH BLADE AND RECEPTACLE BACKSHELL

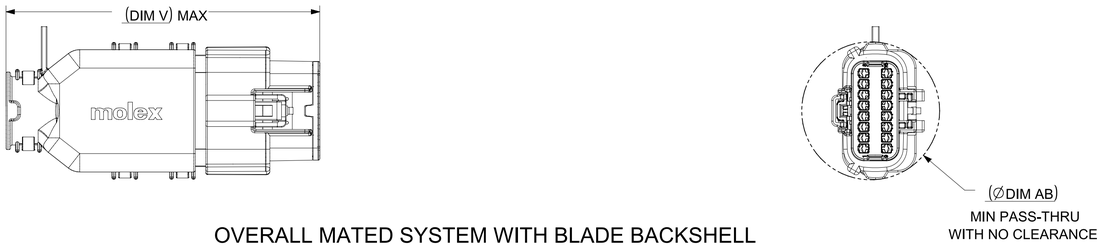

OVERALL MATED SYSTEM WITH BLADE BACKSHELL

OVERALL MATED SYSTEM WITH RECEPTACLE BACKSHELL

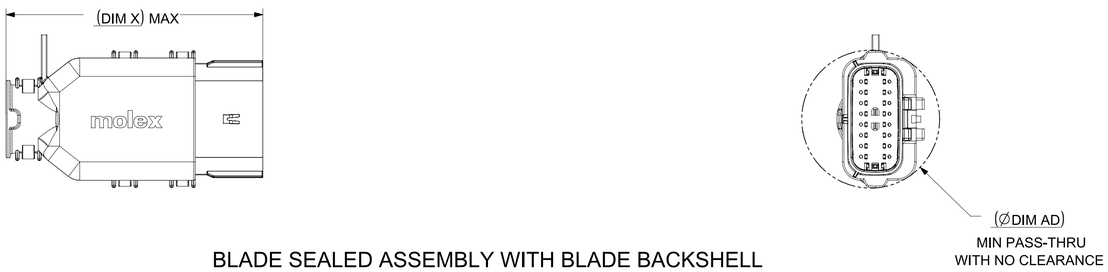

BLADE SEALED ASSEMBLY WITH BLADE BACKSHELL

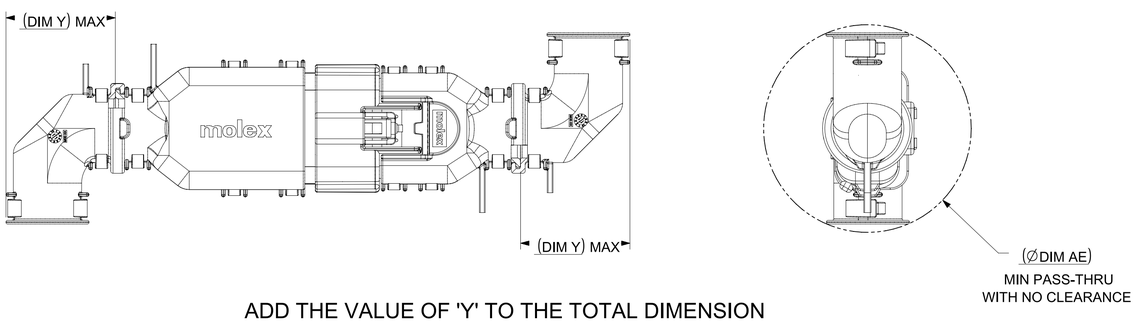

ADD THE VALUE OF 'Y' TO THE TOTAL DIMENSION
WHENEVER ADAPTOR IS USED

CHARTED DIMENSIONS

CKT	BLADE CONFIGURATION	RECEPTACLE CONFIGURATION	DIMENSIONS									
			U	V	W	X	Y	AA	AB	AC	AD	AE
2X4	STANDARD	STANDARD	115.24	94.36	93.93	75.62	32.10	32.93	32.54	32.85	31.76	56.81
2X8	STANDARD	STANDARD	132.49	102.81	102.73	84.07	36.10	45.44	45.44	42.65	45.44	68.18
2X10	STANDARD	STANDARD	132.49	102.81	102.73	84.07	36.10	45.44	45.44	42.65	45.44	68.18

THIS DRAWING CONTAINS INFORMATION THAT IS PROPRIETARY TO MOLEX ELECTRONIC TECHNOLOGIES, LLC AND SHOULD NOT BE USED WITHOUT WRITTEN PERMISSION

FUNCTIONAL SYMBOLS: FA = 0, FC = 0, FP = 0

DIVISIONAL SYMBOLS

DIMENSION UNITS	SCALE
mm	1:1

GENERAL TOLERANCES (UNLESS SPECIFIED)	
ANGULAR TOL	± 1°
4 PLACES	±
3 PLACES	±
2 PLACES	± 0.100
1 PLACE	± 0.20
0 PLACES	±

DRAFT WHERE APPLICABLE MUST REMAIN WITHIN DIMENSIONS

CURRENT REV DESC:

STATUS: Production
DRWN: Yann Chen 2023-09-26
CHK'D: Yu Chao Fu 2023-09-26
APPR: Elvis Song 2023-09-27

THIRD ANGLE PROJECTION

DRAWING: A1-SIZE
SERIES: 33482

molex

MX150 BLADE
DUAL ROW SEALED ASSEMBLY

PRODUCT SALES DRAWING

DOCUMENT NUMBER	DOC TYPE	DOC PART	REVISION
SD-33482-0001	PSD	001	E3

MATERIAL NUMBER	CUSTOMER	SHEET NUMBER
	GENERAL MARKET	11 OF 11