THIS DRAWING IS UNPUBLISHED. RELEASED FOR PUBLICATION -,- .
© COPYRIGHT - By - ALL RIGHTS RESERVED.

| LOC | DIST |
|---|---|
| AD | 00 |

REVISIONS

| P | LTR | DESCRIPTION | DATE | DWN | APVD |
|---|---|---|---|---|---|
| | B2 | REVISED PER ECO-11-005033 | 28MAR11 | RK | HMR |

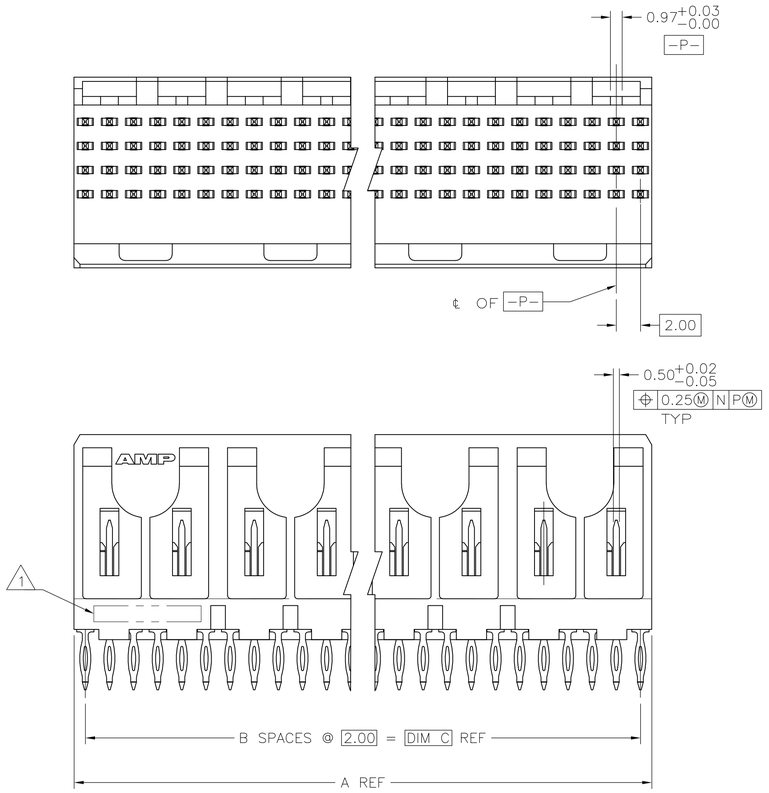


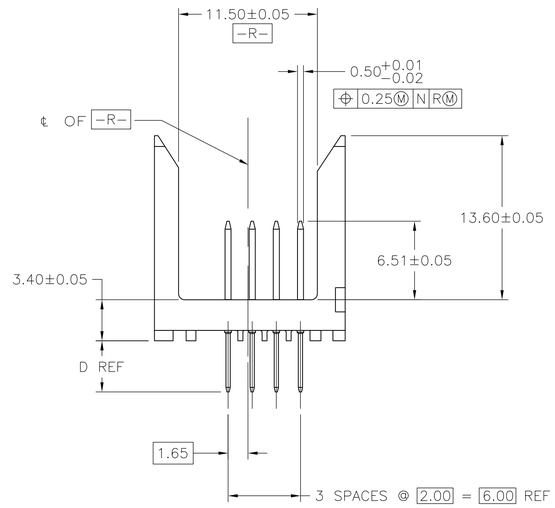


1. HOUSING MATERIAL: LIQUID CRYSTAL POLYMER PER ASTM D5138 LCP000 G30A 32250, COLOR: NATURAL.
2. CONTACT MATERIAL: PHOSPHOR BRONZE.
3. CONTACT FINISH:
   UNDERPLATE (ENTIRE CONTACT):
   0.00127 MIN NICKEL PER SAE-AMS-QQ-N-290.
   ON MATING SURFACES:
   CONFORMS TO ALL TESTING SPECIFIED FOR TELCORDIA UNCONTROLLED ENVIRONMENT.
   ON LEADS
   0.0006 MIN TIN PER ASTM B 545 OVER UNDERPLATE.
   LUBRICATION (MIN MATING SURFACES):
   SURFACE CONDITIONER AFTER PLATING.
4. PART MARKING, LOCATED APPROXIMATELY AS SHOWN.
5. DIMENSION APPLIES WHEN SEATED ON PRINTED CIRCUIT BOARD.
6. CONTACT FINISH:
   UNDERPLATE (ENTIRE CONTACT):
   0.00127 MIN NICKEL PER SAE-AMS-QQ-N-290.
   ON MATING SURFACES:
   0.00076 MIN NICKEL OR COBALT HARDENED GOLD PER ASTM B-488 OVER UNDERPLATE.
   ON LEADS
   0.0006 MIN TIN PER ASTM B 545 OVER UNDERPLATE.
   LUBRICATION (MIN MATING SURFACES):
   SURFACE CONDITIONER AFTER PLATING.

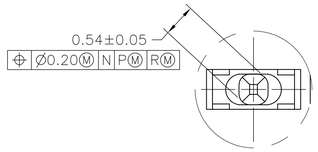


DETAIL Z
SCALE 20:1

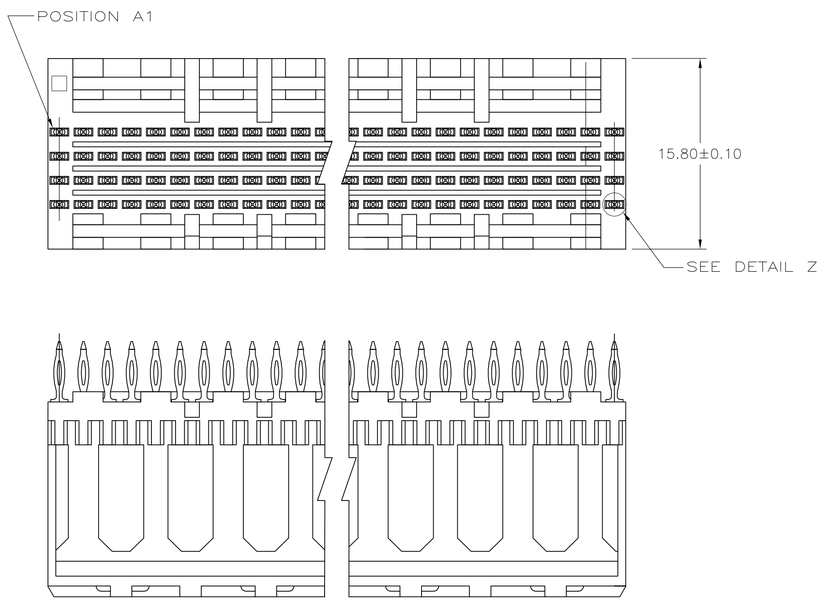


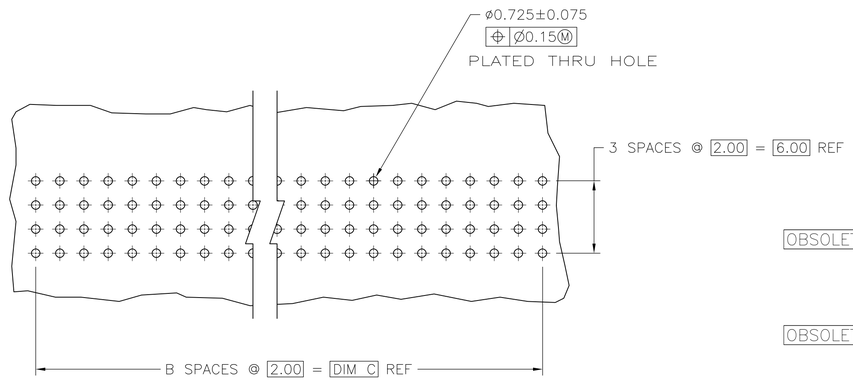


RECOMMENDED CIRCUIT PATTERN
PER IPC-D300 TYPE II, CLASS C
(COMPONENT SIDE)

| | D | C | B | A | FINISH | NO OF POSN | PART NUMBER |
|---|---|---|---|---|---|---|---|
| | 4.25 | 46 | 23 | 47.88 | 6 | 96 | 3-5536504-3 |
| | 4.25 | 22 | 11 | 23.88 | 6 | 48 | 3-5536504-2 |
| | 4.25 | 10 | 5 | 11.88 | 6 | 24 | 3-5536504-1 |
| OBSOLETE | 4.25 | 34 | 17 | 35.88 | 3 | 72 | 1-5536504-2 |
| | 4.25 | 130 | 65 | 131.88 | 3 | 264 | 1-5536504-1 |
| | 4.25 | 106 | 53 | 107.88 | 3 | 216 | 1-5536504-0 |
| | 4.25 | 118 | 59 | 119.88 | 3 | 240 | 5536504-9 |
| | 4.25 | 70 | 35 | 71.88 | 3 | 144 | 5536504-8 |
| OBSOLETE | 4.25 | 66 | 33 | 67.88 | 3 | 136 | 5536504-7 |
| | 4.25 | 58 | 29 | 59.88 | 3 | 120 | 5536504-6 |
| | 4.25 | 82 | 41 | 83.88 | 3 | 168 | 5536504-5 |
| | 4.25 | 94 | 47 | 95.88 | 3 | 192 | 5536504-4 |
| | 4.25 | 46 | 23 | 47.88 | 3 | 96 | 5536504-3 |
| | 4.25 | 22 | 11 | 23.88 | 3 | 48 | 5536504-2 |
| | 4.25 | 10 | 5 | 11.88 | 3 | 24 | 5536504-1 |

THIS DRAWING IS A CONTROLLED DOCUMENT.

DIMENSIONS: mm

TOLERANCES UNLESS OTHERWISE SPECIFIED:
0 PLC ± –
1 PLC ± –
2 PLC ± .13
3 PLC ± –
4 PLC ± –
ANGLES ± –

MATERIAL 1 2
FINISH 3 6

DWN B. MCMASTER 30AUG04
CHK R. WERTZ 30AUG04
APVD R. WERTZ 30AUG04
PRODUCT SPEC —
APPLICATION SPEC —
WEIGHT —

TE Connectivity

NAME PIN ASSEMBLY, SIGNAL MODULE, Z-PACK 2mm FB, 2mm

| SIZE | CAGE CODE | DRAWING NO | RESTRICTED TO |
|---|---|---|---|
| A1 | 00779 | C-5536504 | — |

CUSTOMER DRAWING | SCALE 4:1 | SHEET 1 OF 1 | REV B2

4805 (3/11)