ARRANGEMENT OF CONTACTS

PARTS	B8003-3P	B8003-4P	B8003-5P	B8003-5A	B8003-5B	B8003-6P	B8003-7P	B8003-8P	B8003-8A
ANGLE	180°	216°	180°	240°	360°	240°	270°	270°	262°
POSITION OF VIEWS									

SPECIFICATIONS	
Dielectric strength	1,000V AC/1 Minute
Contact resistance	20M Ω Max.
Insulation resistance	100M Ω Min. at 500V DC
Rating	100V AC 2A

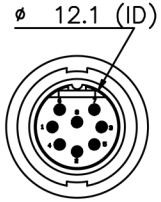

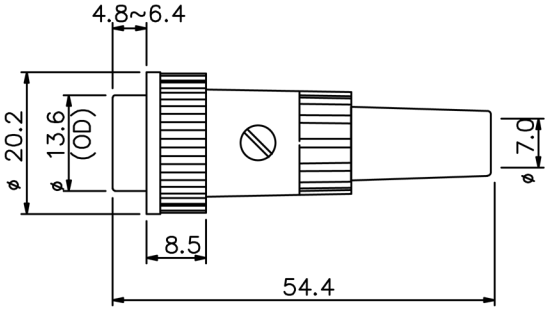

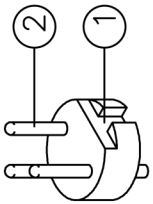

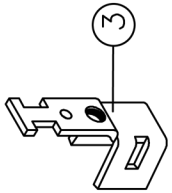

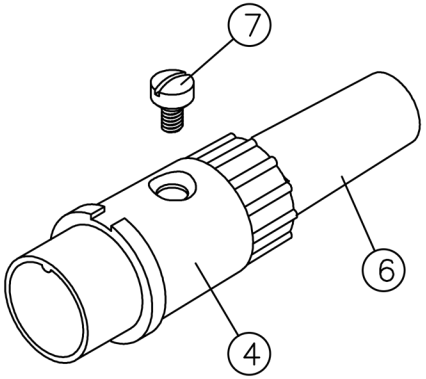

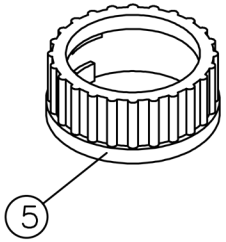

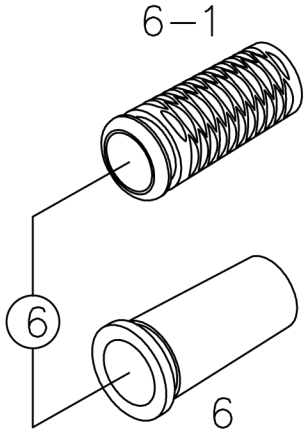

P/N	PART NAME	Q'TY	MATERIAL	PLATING	REMARKS
7	SCREW	1	2AAR1050 [A4510]	NICKEL	3-5U"
6	PLASTIC TRAIL	1	PVC	BLACK	UL
5	LOCK COVER	1	DIECAST	NICKEL	3-5U"
4	MAIN BODY	1	DIECAST	NICKEL	3-5U"
3	CLIP PLATE	1	SPC SB (0.95t)	NICKEL	3-5U"
2	CONTACT TERMINAL	8	BSR-H (1.5D) [R-35]	SILVER PLATED	3-5U"
1	PLASTIC CORE	1	NYLON [101]	BLACK	UL94V2

DRAWN	KIDD	APP'D		UNIT	mm	TOLERANCE .x ±0.20 .xx ±0.10 .xxx ±0.05 .xxxx ±0.03 ANGULA ±1°		TITLE	B8003-8P METAL DIN CIRCULAR PLUG			SHEET 1/1
CHK'D				SCALE	1:1			PART NO.	B8003-8P	DWG NO.	METAL DIN PLUG	VERSION A