Customer Information Sheet

DRAWING No.: M80-826XXXXP	SHEET 2 OF 2	IF IN DOUBT - ASK	©	NOT TO SCALE	THIRD ANGLE PROJECTION	ALL DIMENSIONS IN mm

ORDER CODE:

M80-826XXXXP

TOTAL No. OF WAYS
04, 06, 08, 10, 12
14, 16, 18, 20, 26
34, 44

FINISH
22 - SELECTIVE GOLD + TIN/LEAD
42 - SELECTIVE GOLD + 100% TIN
45 - GOLD

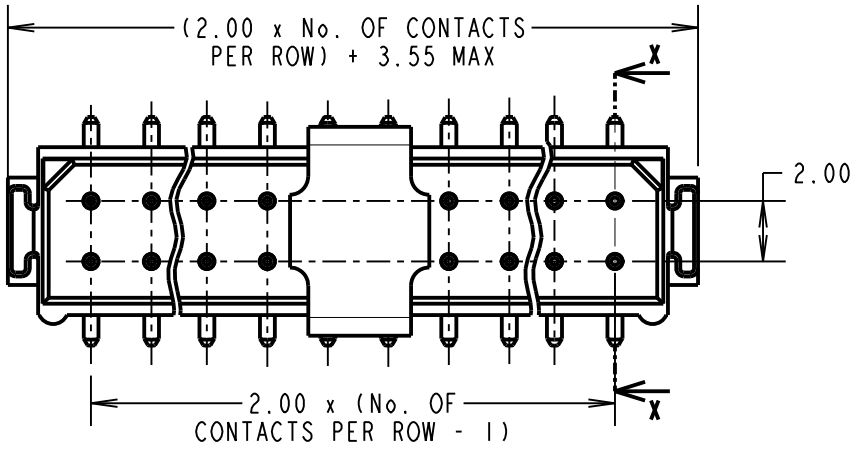

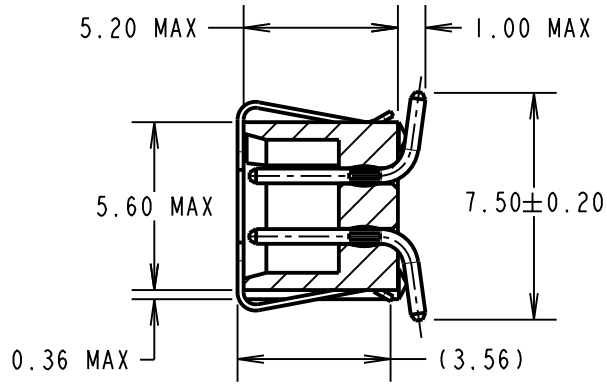

SECTION X-X

NOTES:
1. 2-OFF STRAIN RELIEF STRAPS M80-0030006 MAY BE USED WITH THIS CONNECTOR.

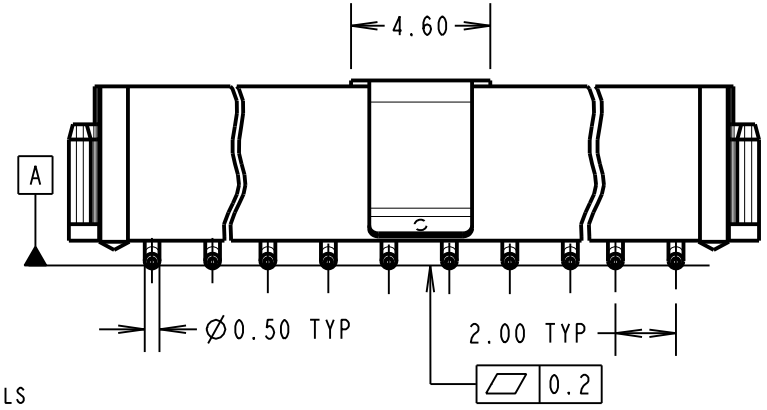

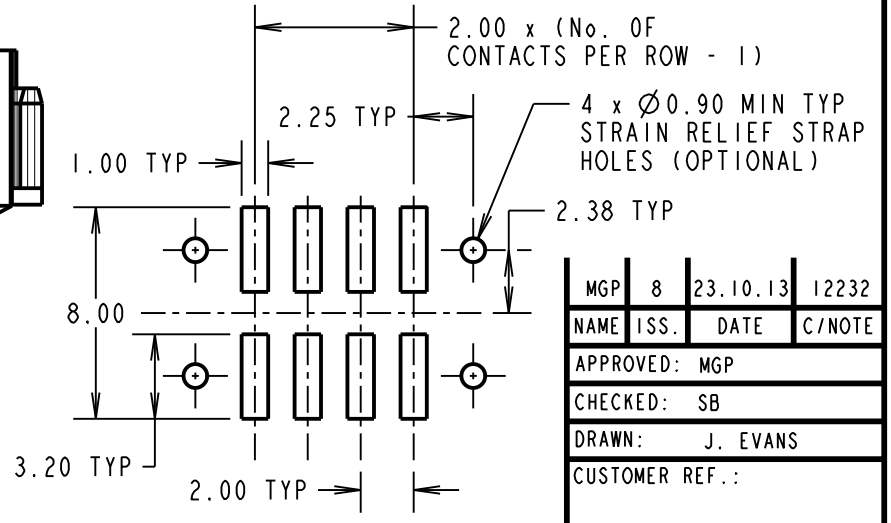

RECOMMENDED PCB LAYOUT

SPECIFICATIONS:
MATERIAL:
MOULDING = G-F PPS UL94V-0, BLACK
CONTACTS = PHOSPHOR BRONZE
FINISH:
CONTACTS:
22 = 0.75µ GOLD ON CONTACT AREA, 3.0µ 90/10 TIN/LEAD ON TAILS
42 = 0.75µ GOLD ON CONTACT AREA, 3.0µ 100% TIN OVER NICKEL ON TAILS
45 = 0.75µ GOLD ALL OVER
ELECTRICAL:
CURRENT RATING AT 25°C = 3.0A MAX
CURRENT RATING AT 85°C = 2.2A MAX
WORKING VOLTAGE = 800V AC/DC
VOLTAGE PROOF = 1200V AC/DC
CONTACT RESISTANCE (INITIAL) = 20 mΩ MAX
CONTACT RESISTANCE (AFTER CONDITIONING) = 25 mΩ MAX
INSULATION RESISTANCE (INITIAL) = 1,000 MΩ MIN
INSULATION RESISTANCE (AFTER CONDITIONING) = 100 MΩ MIN

MECHANICAL:
DURABILITY = 500 OPERATIONS
ENVIRONMENTAL:
TEMPERATURE RANGE = -55°C TO +125°C
PACKING:
TUBE
FOR COMPLETE SPECIFICATION, SEE COMPONENT SPECIFICIATION C005XX (LATEST ISSUE)

NAME	ISS.	DATE	C/NOTE
MGP	8	23.10.13	12232

APPROVED: MGP
CHECKED: SB
DRAWN: J. EVANS
CUSTOMER REF.:
ASSEMBLY DRG:

HARWIN
www.harwin.com
technical@harwin.com

THIS DRAWING AND ANY INFORMATION OR DESCRIPTIVE MATTER SET OUT HEREON ARE CONFIDENTIAL AND COPYRIGHT PROPERTY OF THE HARWIN GROUP AND MUST NOT BE DISCLOSED, LOANED, COPIED OR USED FOR MANUFACTURING, TENDERING OR FOR ANY OTHER PURPOSE WITHOUT THEIR WRITTEN PERMISSION.

TOLERANCES
X. = ±1mm
X.X = ±0.25mm
X.XX = ±0.10mm
X.XXX = ±0.01mm
ANGLES = ±5°
UNLESS STATED

MATERIAL: SEE ABOVE
FINISH: SEE ABOVE
S/AREA: mm²

TITLE: DATAMATE L-TEK MALE DIL VERTICAL SMT ASSEMBLY - UNLATCHED, P/PLACE

DRAWING NUMBER: **M80-826XXXXP**

SHT 2 OF 2