DRW NO.	SH	REV
C-492-5100-500	1	L

ZONE	REV	SCR NO.	DESCRIPTION	BY	DATE	APPROVED
-	-	37557	NEW RELEASE	SG	1/24/02	LI
-	A	37879	CORRECTED TABLE II	SG	2/26/02	LI
-	B	40391	MODIFIED TABLE II, NOTE 9, & PIN A1	SG	11/7/02	LI
-	C	40883	ADDED TABLE V	SG	01/24/03	LI
-	D	WLII-5VCQAB.VER02	ADDED TABLE VI. REVISED DATUMS	SG	11/14/03	LI
-	E	KLEC-66RSHX.VER01	ADDED NOTES 17 & 18	SG	9/16/04	LEBLANC
-	F	DMAG-6BSKQQ.VER01	ADDED LEAD FREE PLATING OPTION	GKR	05/16/05	S.BAIR
-	G	MLEE-6KGMFU.VER01	REPLACED DRAWING FORMAT	M.LEE	01/20/06	C.SAMMIS
	H	SBAR-6NJP6M.VER01	MODIFIED TABLES II & III	HCL	04/12/06	K.LEBLANC
	J	MCHU-6U9JT6.VER01	UPDATED NOTE 7	HCL-AP	10/13/06	K.LEBLANC
	K	CSAS-82ZPTE.VER01	ADDED NEW PART NUMBERS FOR NEW PLATING CODES IN ASSEMBLY PART NUMBER ASSIGNMENT TREE. REMOVED TABLE 6 & NOTE 16. MODIFIED NOTE 6 AND 7.	HCL-MH	03/01/2010	C.SAMMIS
	L	DSMH-973HUM.VER01	CORRECTED TOTAL LENGTH DIMENSION	HCL-PG	04/29/2013	D.SIMTH

TABLE 1

ASSEMBLY PART NUMBER	BACKPLANE POLARIZING GUIDANCE MODULE	NO OF POSN	TOTAL NUMBER OF SIGNAL CONTACTS	TOTAL NUMBER OF GROUND SHIELDS	M	K	(L)
492-X110-XXX	492-0110-070	10	40	10	27.0	9	(18.00)
492-X125-XXX	492-0125-070	25	100	25	57.0	24	(48.00)

TABLE 2

ASSEMBLY PART NUMBER	SIGNAL CONTACT	CONTACT LENGTH
492-51XX-XX1	260-0022-(7)	4.75
492-51XX-XX2	260-0021-(7)	6.25
492-51XX-XX3	260-0023-(7)	4.25
492-51XX-XX4	260-0024-(7)	5.15
492-61XX-XX1	260-0002-(7)	4.75
492-61XX-XX2	260-0001-(7)	6.25
492-61XX-XX3	260-0003-(7)	4.25
492-61XX-XX4	260-0004-(7)	5.15

TABLE 3

ASSEMBLY PART NUMBER	SHIELD CONTACT	SHIELD HEIGHT
492-51XX-XXX	262-0022-(7)	5.3
492-61XX-XXX	262-0002-(7)	5.3

BACKPLANE POLARIZING/GUIDANCE MODULE (6)
ASSEMBLY PART NUMBER ASSIGNMENT

492- X 1 X X - X X X

- 2 = CUSTOM LOAD. LEAD FREE
- 5 = UNIFORM LOAD. 720X
- 6 = UNIFORM LOAD. BRUSH 60
- 7 = CUSTOM LOAD. LEADED
- L = CUSTOM LOAD. LEADED. ADVANCED PLATING
- N = CUSTOM LOAD. LEAD FREE. ADVANCED PLATING

NUMBER OF POSITIONS
10 = 10 POSITION
25 = 25 POSITION
(SEE TABLE 1)

POLARIZING PIN LOCATION CODE (SEE TABLE 4)

SIGNAL PIN LOAD (SEE TABLE 2)
LENGTH
1 = 4.75
2 = 6.25
3 = 4.25
4 = 5.15

PLATING (7)
0 = 735 4=804
1 = 732 5=803
2 = 769 6=806
3 = 768 7=805

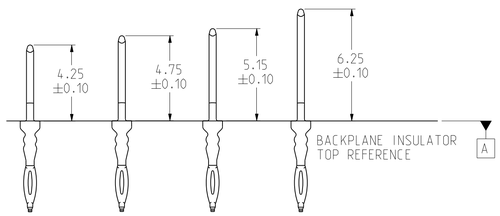

DETAIL U
SCALE 6/1
SEE TABLE 2

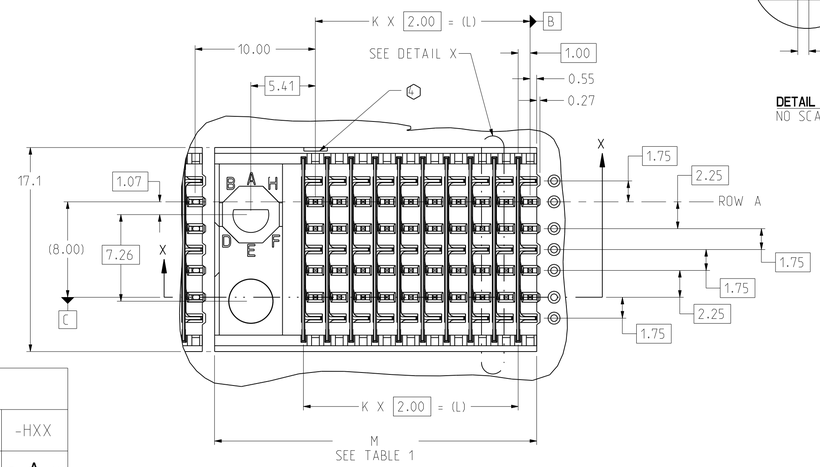

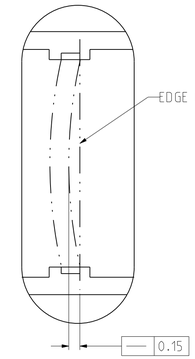

DETAIL X (3)
NO SCALE

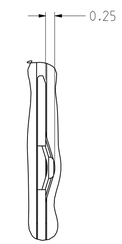

DETAIL K
SCALE 12/1

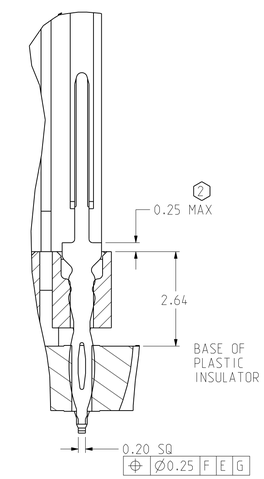

DETAIL L
SCALE 12/1

TABLE 4 (1)

PART NUMBER 492-X1XX-(XXX)	-0XX	-AXX	-BXX	-CXX	-DXX	-EXX	-FXX	-GXX	-HXX
POLARIZING PIN ORIENTATION	B A H D E F	B A H D E F	B A H D E F	B A H D E F	B A H D E F	B A H D E F	B A H D E F	B A H D E F	B A H D E F

TABLE 5 (17)(18)

GUIDE/POLARIZING PIN	PART NUMBER	N	P
STANDARD GUIDE PIN	564-0385-553	19.3	-
CUSTOM GUIDE PIN	564-0420-553	17.3	-
CUSTOM GUIDE PIN	564-0487-553	13.4	-
STANDARD POL PIN	564-0387-540	-	12.6
CUSTOM POL PIN	564-0457-553	-	12.6

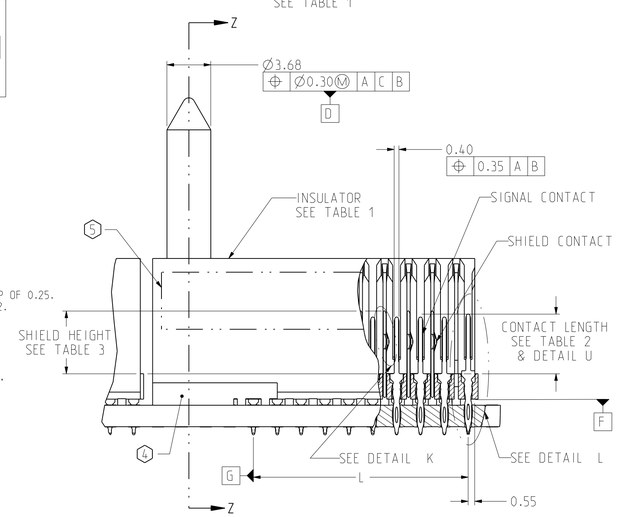

SECTION X-X

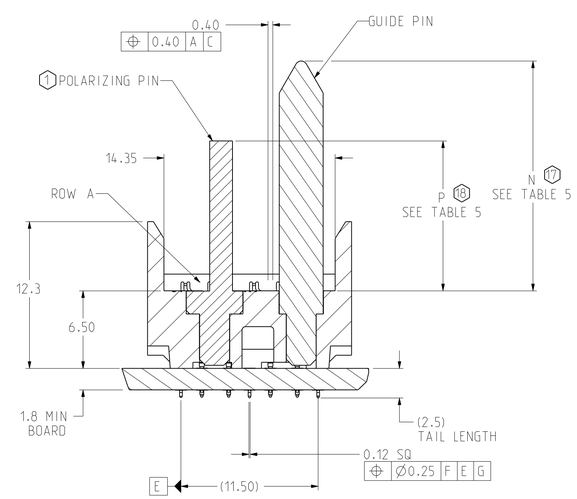

SECTION Z-Z

NOTES:

(1) POLARIZING PIN MUST ALIGN AS INDICATED BY PART NUMBER CODE (SEE TABLE 4). TO INSURE PROPER ALIGNMENT. THE OCTAGONAL BASE PORTION OF THE PIN MUST BE POSITIONED INTO THE CORRESPONDING MOLDED CAVITY.
(2) WHEN ASSEMBLED TO BACKPLANE INSULATOR. CONTACTS MUST SEAT FLUSH WITH INSULATOR'S TOP SURFACE TO A MAXIMUM ALLOWABLE GAP OF 0.25.
(3) SHIELD SHALL BE STRAIGHT WITH MAXIMUM ALLOWABLE BOW OF 0.15 MILLIMETERS ON EITHER SIDE OF SHIELD. SEE DETAIL X ON SHEET 2.
(4) OPEN NOTCH END DESIGNATES COLUMN 1.
(5) PART MARKING AS FOLLOWS:
LINE 1: ATCSYYWWDHH (LOGO. YEAR. WEEK. DAY. HOUR).
LINE 2: MODULE PART NUMBER (492######).
LINE 3: WORK ORDER NUMBER (VH•#####) WHERE "•" DENOTES MANUFACTURING LOCATION.
(6) IF MODULE PART NUMBER IS 492-7XXX-XXX OR 492-2XXX-XXX OR 492-LXXX-XXX OR 492-NXXX-XXX. PART REVISION. MODULE ORIENTATION. NUMBER OF COLUMNS. PLATING CODE. AND SIGNAL CONTACT LOAD ARE NOT APPLICABLE.
(7) LAST 3 DIGITS OF THE SIGNAL CONTACT AND SHIELD CONTACT PART NUMBERS ARE DETERMINED BY PLATING CODE.MATCHED PLATING DEFINED BY THE 9th DIGIT OF ASSEMBLY PART NUMBER.
735 - Ni SULFAMATE. STANDARD GOLD. LEADED
732 - Ni SULFAMATE. HIGH GOLD. LEADED
769 - Ni SULFAMATE. STANDARD GOLD. LEAD-FREE
768 - Ni SULFAMATE. HIGH GOLD. LEAD-FREE
804 - NANO Ni. STANDARD GOLD. LEADED
803 - NANO Ni. HIGH GOLD. LEADED
806 - NANO Ni. STANDARD GOLD. LEAD-FREE
805 - NANO Ni. HIGH GOLD. LEAD-FREE
8. FOR HASL ONLY. PTH TO BE Ø0.610-0.495 MILLIMETERS.
9. ROUTE DIFFERENTIAL PAIRS THROUGH PINS B-C AND E-F.
(10) DATUM -A- IS DEFINED AS THE WAFER MATING SURFACE OF THE PLASTIC INSULATOR.
11. DATUM -B- IS DEFINED AS THE CENTERLINE OF THE TOP OF THE OUTERMOST WAFER SLOTS IN THE INSULATOR WALLS.
12. DATUM -C- IS DEFINED AS THE CENTERLINE OF THE CONNECTOR MEASURED FROM THE TWO OUTERMOST ROWS OF SIGNAL CONTACT HOLES.
13. DATUM -E- IS DEFINED AS THE CENTERLINE OF THE CONNECTOR MEASURED FROM THE TWO OUTERMOST COLUMNS OF SIGNAL CONTACTS TAIL SIDE.
14. DATUM -F- IS DEFINED AS THE BOTTOM SURFACE OT THE PLASTIC INSULATOR.
15. DATUM -G- IS DEFINED AS THE CENTERLINE OF THE CONNECTOR MEASURED FROM THE TWO OUTERMOST ROWS OF SIGNAL CONTACTS TAIL SIDE.
(16) REMOVED.
(17) USING GUIDE PINS THAT ARE SHORTER THAN THE STANDARD HEIGHT OF 19.3mm AND POLARIZING PINS THAT ARE SHORTER THAN THE STANDARD HEIGHT OF 12.6mm MAY NOT PROVIDE THE SUFFICIENT X AND Y AXIS ALIGNMENT AND POLARIZING PROTECTION PRIOR TO COMMENCEMENT OF ALL COMPONENT MATING SEQUENCES. CONSULT TERADYNE APPLICATIONS ENGINEERING PRIOR TO SYSTEMS DESIGN AND COMPONENT SELECTION.
(18) STANDARD GUIDE PIN (564-0385-553) AND STANDARD POLARIZING PIN (564-0387-540) ARE IN STANDARD 5000 SERIES MODEL ASSEMBLIES. ANY GUIDE PIN OR POLARIZING PIN OTHER THAN THESE STANDARD NUMBERS WILL RESULT IN CUSTOM 7XXX OR 2XXX OR LXXX OR NXXX SERIES MODULE ASSEMBLIES BEING ASSIGNED.

TOLERANCES	
0.0	±0.25
0.00	±0.13
0.000	± -
ANGLES	± -

UNLESS OTHERWISE SPECIFIED DIMENSIONS ARE IN MM. DECIMAL MARKER IS A PERIOD

DESIGN 4/19/01 D.Manter
DRAWN 4/19/01 J.Varhegyi
CHK 4/19/01 D.Manter
APVD 4/19/01 D.Manter

Amphenol TCS
A Division of Amphenol Corporation
200 Innovative Way, Nashua, NH 03062 603.879.3000

TITLE BACKPLANE POLARIZING/GUIDANCE M
ASSEMBLY. LEFT. 6 ROW VHDM/HSD

PART NO. SEE PART NUMBER TREE — REV N/A
DRAWING NO. C-492-5100-500 — REV L
Pro/E type: AP1018-BP-10PSN-LEFT-CUST-USE 1.18
Pro/E DRAWING: C-492-5100-500 L.0
SIZE D SCALE 4/1 SHEET 1 OF 2

INTERPRET PER ASME Y14.5M
CODE IDENT 31413
CUSTOMER USE DRAWING

DRW NO. C-492-5100-500 SH 1 REV L

DRW NO.	SH	REV
C-492-5100-500	2	L

ZONE	REV	SCR NUMBER	DESCRIPTION	BY	DATE	APPROVED
			SEE SHEET 1			

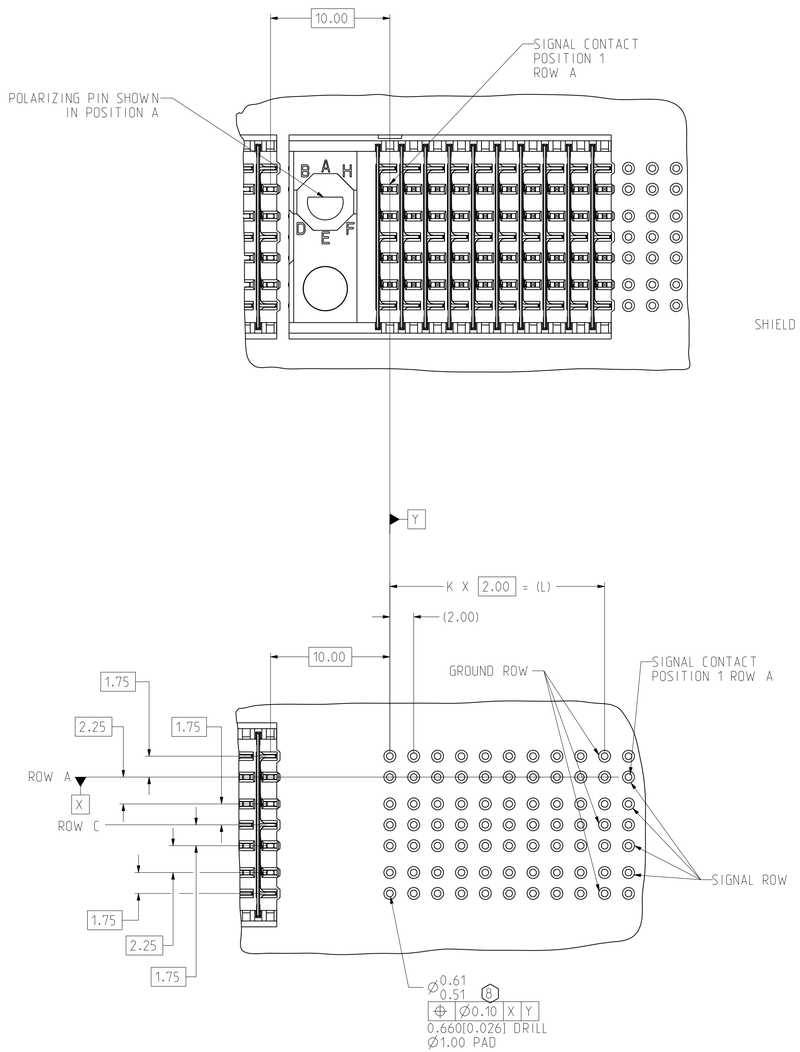

BACKPLANE HOLE PATTERN
SIGNAL WITH GUIDANCE

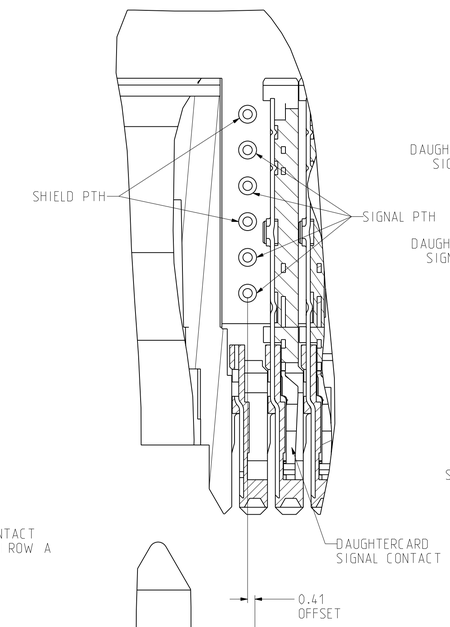

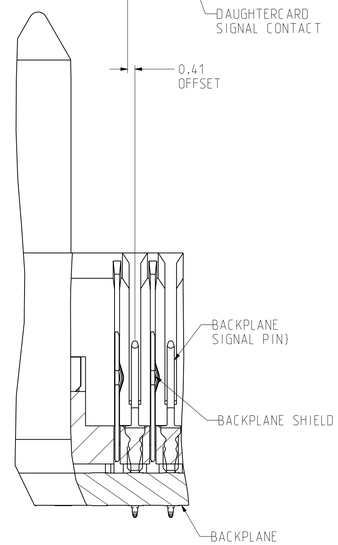

DETAIL V
SCALE 6/1

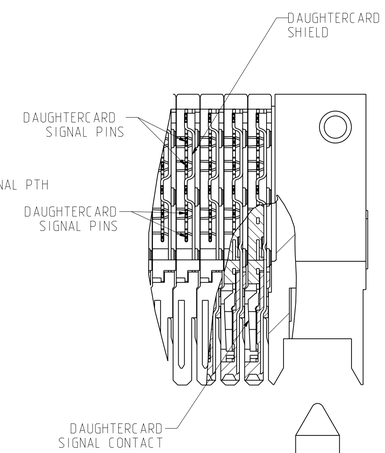

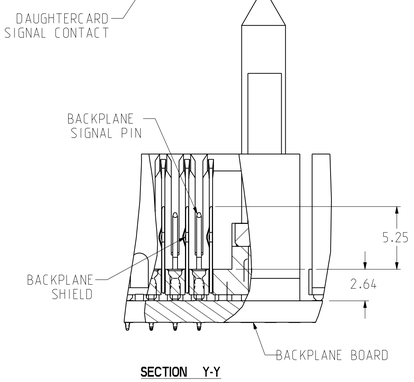

SECTION Y-Y

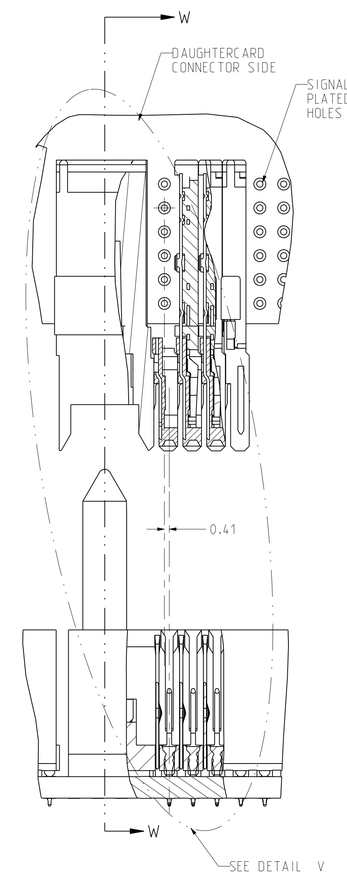

SECTION Y-Y

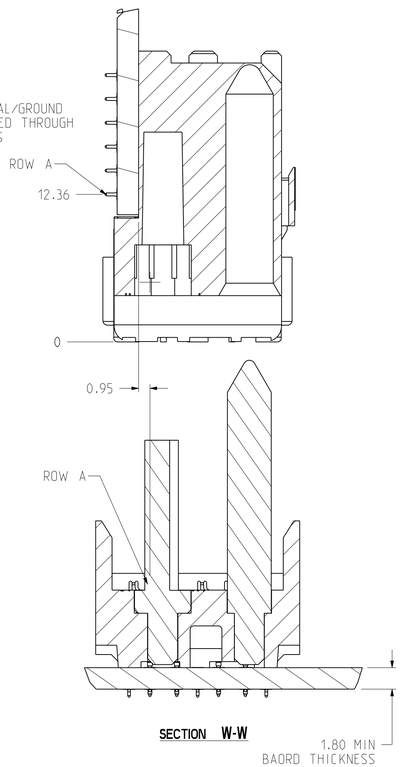

SECTION W-W

TOLERANCES	
0.0	±0.25
0.00	±0.13
0.000	± -
ANGLES	± -

UNLESS OTHERWISE SPECIFIED DIMENSIONS ARE IN MM. DECIMAL MARKER IS A PERIOD

INTERPRET PER ASME Y14.5M

CODE IDENT 31413

CUSTOMER USE DRAWING

DESIGN 4/19/01	D.Manter	
DRAWN 4/19/01	J.Vanhegyi	
CHK 4/19/01	D.Manter	
APVD 4/19/01	D.Manter	

Amphenol TCS
A Division of Amphenol Corporation
200 Innovative Way, Nashua, NH 03062 603.879.3000

TITLE BACKPLANE POLARIZING/GUIDANCE M
ASSEMBLY. LEFT. 6 ROW VHDM/HSD

PART NO.	SEE PART NUMBER TREE	REV N/A
DRAWING NO.	C-492-5100-500	REV L
Pro/E type: AP1018-BP-10PSN-LEFT-CUST-USE Pro/E DRAWING: C-492-5100-500		1.18 L.0

SIZE D | SCALE 4/1 | SHEET 2 OF 2

DRW NO. C-492-5100-500 SH 2 REV L