Powering Servos from Separate Power Supply Setup

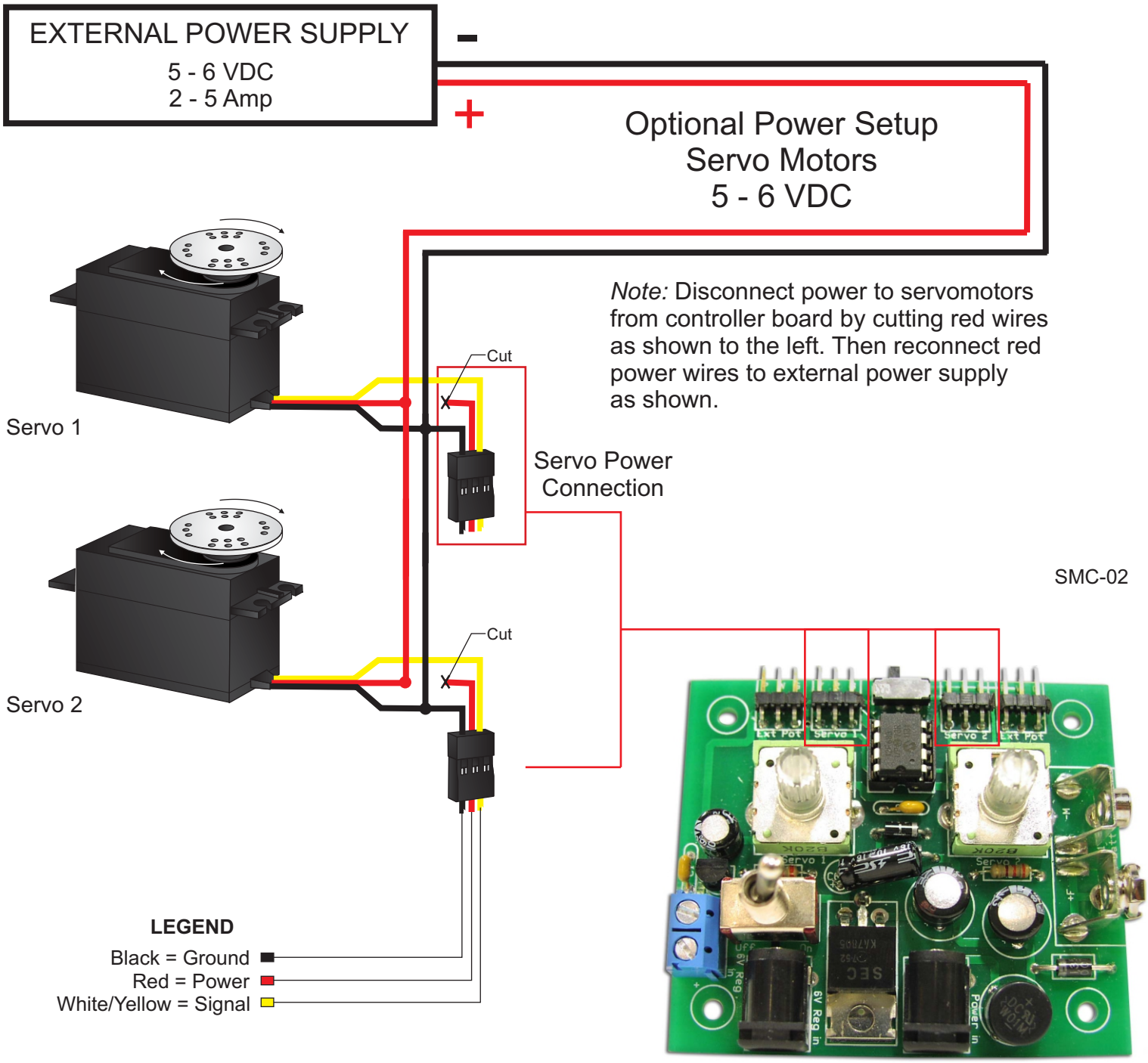

Copyright © 2012 Images SI, Inc., All Rights Reserved.